NORTH BRANCH
—Minnesota—

Kevin Schieber
Mayor

Robert Canada
Councilmember/Acting Mayor

Patrick Meacham
Councilmember

Jeff Goulet
Councilmember

Jim Ibinger
Councilmember

CITY COUNCIL
REGULAR AGENDA
TUESDAY, MAY 13, 2025 @ 7:00 PM
CITY HALL, 6408 ELM STREET, NORTH BRANCH, MN 55056

1. CALL TO ORDER

2. PLEDGE OF ALLEGIANCE

3. ROLL CALL

4. AGENDA APPROVAL
   a. Approve Agenda — ACTION

5. PRESENTATION & PROCLAMATION
   a. Predatory Offender Registration and Public Notification - Brad VanderVegt, MN Dept. of Corrections Notification Coordinator — INFO

6. PUBLIC COMMENT
   Provides an opportunity for the public to address the Council on items that are not on the Agenda. Please raise your hand to be recognized. Please state your name and address for the record. This section is for the express purpose of addressing concerns of City services and operations. It shall not be used to clarify individual's views for political purposes.

7. CONSENT AGENDA
   All matters listed under Consent Agenda are considered routine and/or non-controversial and will be approved by one motion. There will be no separate discussion of these items unless a Councilmember or citizen so requests, in which case the item will be removed from the Consent Agenda and considered in its normal sequence on the Agenda.
   a. Claims — ACTION
   b. Approval of minutes - Special Meeting - April 17, 2025 7:00 PM — ACTION
   c. Approval of minutes - Regular Council Meeting - April 22, 2025 7:00PM — ACTION
   d. Approval of minutes - Special Council Meeting - April 29, 2025 6:30PM — ACTION
   e. Approval of Temporary Road Closure During Midsummer Events — ACTION
   f. Approval of Resolution R-188-2025 approving the Final Plat for Sherwood Pines — ACTION

g.	Approval of hiring City Clerk	ACTION
h.	Receive Legal Staff Report for the Month of April, 2025	INFO
i.	Approval of hiring Public Works Maintenance 1	ACTION
j.	Approval of 30 day Transient Merchant License Group Sale for Custom Remodelers Inc.	ACTION
k.	Approval of Resolution R-191-2025 to apply for a BDPI Grant	ACTION
l.	Approval of Resolution R-192-2025 for the closing of funds	ACTION
m.	Approval of LG220 Application for Exempt Permit for a raffle for Memories Made Outdoors Veteran's organization	ACTION
n.	Receive the resignation of Terry Anderson, part-time liquor store clerk.	ACTION
o.	Approval of funding support for Christopher Capaul's Riverwalk Park Eagle Scout Project	ACTION
p.	Approval of Northwood Park Trees/Landscaping quote for DNR Outdoor Recreation Grant	ACTION
q.	Approval of Special Event Permit Application for Wildridge Block Party and Street Closure	ACTION

8. PUBLIC HEARINGS

9. STAFF REPORTS

a.	Consider Council appointments to Commissions and Advisory Committees	ACTION
b.	Consider Ordinance 393-2025 for a zoning text amendment to allow single-family homes as a permitted use in the R-3 Zoning District.	ACTION
c.	Consider Resolution R-190-2025 for the Cedar Ridge Community Preliminary Plat	ACTION
d.	March 2025 Finance Update	INFO
e.	Street Sweeping, Leaf Pick Up, and Compost Site Update	INFO
f.	Consider Approval of City Wide Traffic Speed Study	ACTION

10. MAYOR/CITY COUNCIL

a.	Consider solutions to ongoing problems with our city website and meeting video recording systems	ACTION
b.	Closed meeting for the evaluation of performance of City Administrator under Minn. Stat. Sec. 13D.05, subd. 3(a).	ACTION

11. ADJOURNMENT

Since we do not have time to discuss every point presented, it may seem that decisions are preconceived. However, background information is provided to the City Council on each Agenda item in advance from Staff and appointed Commissions; and decisions are based on this information and past experiences. In addition some items may also have been discussed preliminarily at Council Work Sessions. If you are aware of information that has not been discussed, please raise your hand to be recognized. Comments that are pertinent are appreciated. Items requiring excessive time may be continued to another meeting.

City of North Branch
Staff Report

Prepared By: Dan Meyer, Police Chief

Presenter: Dan Meyer, Police Chief

Date: 04/30/2025

Board & Commission: City Council

Subject: Predatory Offender Registration and Public Notification - Brad VanderVegt, MN Dept. of Corrections Notification Coordinator

---

Brad VanderVegt, the Community Notification Coordinator with the MN Department of Corrections, will be presenting information on the predatory offender registration process and public notification.

Voting Requirements:

N/A

DEPARTMENT OF CORRECTIONS

The MN Community Notification Process

An Overview

Brad VanderVegt

Community Notification Coordinator

Risk Assessment / Community Notification Unit

MN DOC

Today’s Presentation

1. Registration
2. Community Notification Act
3. Assignment of risk levels
4. Community notification process
5. Questions

Registration

Established July 1, 1991 - *Administered by the MN Bureau of Criminal Apprehension (**BCA**)*

- §**243.166** (*Subd 4b), §**243.167** – Deemed Private Data
- Failure to Register - Felony
- CSC 1st – 5th Degree, Kidnapping, 1st Degree Murder *subd (a)(2) only
- Same/Similar – Charges vs. Convictions
- Interstate Registrants
- 2005 – Included non-sex specific offenses

Community Notification

- Established January 1, 1997
- MN Statute §**244.052**, §**253D.32**

Community Notification

Applies to:

- Registrants released from prison
- Registrants from other states or federal jurisdiction who were released from prison (including military and U.S. territories)
- Those civilly committed for sexual offense behavior

Does not apply to:

- Those with juvenile registration offense only
- Registrants sentenced to probation only

Assigning Risk Levels

End-of-Confinement Review Committee (ECRC)

- Meets 90 days prior to registrant's release
- Psychologist prepares risk assessment recommendation for the committee
- Recommendation utilizes one of three risk assessment tools:
  - MnSOST (males who've engaged in sexual harm)
  - F-SOST* (females who've engaged in sexual harm)
  - LS/CMI (non-sex specific registrants)
- Interstate Commission for Adult Offender Supervision *vs.* Non-compact:

Community Notification

Department of Corrections

- Responsible for assessing risk and assigning risk levels

Law Enforcement

- Responsible for community notification
  - *Scope of notification based on assigned risk level*

Risk Levels & Notification

- Level 1—Lower Risk
  - Law enforcement may notify other law enforcement agencies
  - Law enforcement shall notify victims and witnesses of the offense
  - Law enforcement shall notify adult household members

Risk Levels & Notification

- Level 2—Moderate Risk
  - In addition to Level 1 notifications, law enforcement may notify individuals or organizations based on the registrant's particular offense pattern or history

Risk Levels & Notification

- Level 3—Higher Risk
  - Broad public notification/disclosure
    - DOC public registrant search tool
      - Public notification meeting
      - Media (newspaper, radio, television, etc.)
      - Agency website
      - Social media
      - Door-to-door flyers

DEPARTMENT OF CORRECTIONS

Questions?

Brad VanderVegt
Minnesota Department of Corrections
651-361-7339

City of North Branch
Staff Report

Prepared By: Sharon Wright, Finance Director

Presenter:

Date: 04/09/2025

Board & Commission: City Council

Subject: Claims

Claims

Voting Requirements:

Voting Options **Simple Majority**

City of
North Branch

ACH Checks

5749, 5752, 5770 to 5804 - $553,368.09

Checks

91350 to 91467 - $662,196.71

Payroll

04/25/2025 - $130,417.07

05/09/2025 - $125,830.49

Accounts Payable

Computer Check Proof List by Vendor

User: TiffaniFolstad
Printed: 04/25/2025 - 1:17PM
Batch: 00004.04.2025 - 04252025

Invoice No	Description	Amount	Pmt Date	Acct Number	Reference
Vendor: 1646	Ameritas			Check Sequence: 1	ACH Enabled: False
0425 AMER	PR Batch 00002.04.2025 Ameritas 457 Employe	90.00	04/24/2025	101-00000-21705	PR Batch 00002.04.2025 Ameritas 457 Em
	Check Total:	90.00			
Vendor: 2144	AT&T			Check Sequence: 2	ACH Enabled: False
1414841014	BILL@HAND ACCOUNT	31.08	04/25/2025	101-41420-50321	
	Check Total:	31.08			
Vendor: 2121	BAXTER, JAMES			Check Sequence: 3	ACH Enabled: False
2025 FIREWORKS	2025 DEPOSIT	7,500.00	04/25/2025	851-49990-50430	
	Check Total:	7,500.00			
	Total for Check Run:	7,621.08			
	Total of Number of Checks:	3			

Accounts Payable

Computer Check Proof List by Vendor

User: TiffaniFolstad
Printed: 05/02/2025 - 2:01PM
Batch: 00001.05.2025 - 05022025

Invoice No	Description	Amount	Pmt Date	Acct Number	Reference
Vendor: 2140	Alert 360 Opco, Inc.			Check Sequence: 1	ACH Enabled: False
16240568	MONITORING	56.16	05/01/2025	609-49750-50300	
16240570	MONITORING	70.45	05/01/2025	609-48000-50300	
	Check Total:	126.61			
Vendor: 1010	Alex Air Apparatus 2 LLC			Check Sequence: 2	ACH Enabled: False
52070	REPLACEMENT BLADDER BAG	189.61	05/01/2025	101-42280-50401	
	Check Total:	189.61			
Vendor: 1029	Artisan Beer Company			Check Sequence: 3	ACH Enabled: False
3760642	BEER	120.00	05/01/2025	609-49750-50252	
3762326	BEER	156.90	05/01/2025	609-49750-50252	
3762327	BEER	55.40	05/01/2025	609-48000-50252	
	Check Total:	332.30			
Vendor: 1036	AT & T MOBILITY			Check Sequence: 4	ACH Enabled: False
287294264933X05	WIRELESS SERVICE	2,361.23	05/01/2025	101-41420-50321	
	Check Total:	2,361.23			
Vendor: 1377	Minnesota Bureau of Criminal Apprehension BCA Training			Check Sequence: 5	ACH Enabled: False
40940	3 BCA TRAINING COURSES-JZ	900.00	05/01/2025	101-42110-50332	
	Check Total:	900.00			
Vendor: 1049	BELLBOY CORPORATION			Check Sequence: 6	ACH Enabled: False
0109700300	N/A SALES	173.75	05/01/2025	609-49750-50250	
0109700400	N/A SALES	130.59	05/01/2025	609-48000-50250	

Invoice No	Description	Amount	Pmt Date	Acct Number	Reference
0207419900	WINE	219.30	05/01/2025	609-49750-50253	
0207419900	LIQUOR	812.33	05/01/2025	609-49750-50251	
0207420000	WINE	302.10	05/01/2025	609-48000-50253	
0207420000	LIQUOR	324.25	05/01/2025	609-48000-50251	
0207450200	LIQUOR CREDIT	-107.69	05/01/2025	609-49750-50251	
0207488100	LIQUOR	1,312.20	05/01/2025	609-49750-50251	
0207488100	THC	693.20	05/01/2025	609-49750-50254	
	Check Total:	3,860.03			
Vendor: 1052	Bernicks			Check Sequence: 7	ACH Enabled: False
10345283	BEER	5,010.30	05/01/2025	609-49750-50252	
10345283	N/A SALES	61.50	05/01/2025	609-49750-50250	
10345284	BEER CREDIT	-38.44	05/01/2025	609-49750-50252	
10345288	THC	96.00	05/01/2025	609-48000-50254	
10345289	BEER	3,165.30	05/01/2025	609-48000-50252	
10348143	THC	76.50	05/01/2025	609-49750-50254	
10348144	BEER	6,362.70	05/01/2025	609-49750-50252	
10348144	LIQUOR	60.00	05/01/2025	609-49750-50251	
10348144	N/A SALES	32.50	05/01/2025	609-49750-50250	
10348145	N/A SALES	55.44	05/01/2025	609-49750-50250	
10348146	BEER CREDIT	-22.00	05/01/2025	609-49750-50252	
10348153	THC	70.00	05/01/2025	609-48000-50254	
10348154	BEER	1,755.65	05/01/2025	609-48000-50252	
10348155	BEER CREDIT	-20.00	05/01/2025	609-48000-50252	
	Check Total:	16,665.45			
Vendor: 1066	Breakthru Beverage MN			Check Sequence: 8	ACH Enabled: False
120986161	LIQUOR	2,135.43	05/01/2025	609-48000-50251	
120986162	N/A SALES	73.20	05/01/2025	609-48000-50250	
120986286	N/A SALES	76.95	05/01/2025	609-49750-50250	
120986287	WINE	120.65	05/01/2025	609-49750-50253	
121115787	BEER	142.50	05/01/2025	609-48000-50252	
121115816	BEER	142.50	05/01/2025	609-49750-50252	
121119109	LIQUOR	1,178.51	05/01/2025	609-48000-50251	

Invoice No	Description	Amount	Pmt Date	Acct Number	Reference
121119110	N/A SALES	202.67	05/01/2025	609-48000-50250	
121119111	WINE	316.95	05/01/2025	609-48000-50253	
121120243	LIQUOR	8,245.92	05/01/2025	609-49750-50251	
121120244	WINE	739.55	05/01/2025	609-49750-50253	
	Check Total:	13,374.83			
Vendor: 1092	Central Pension Fund			Check Sequence: 9	ACH Enabled: False
FOR APR	PAYROLL LIABILITY	5,000.06	05/01/2025	101-00000-21705	
	Check Total:	5,000.06			
Vendor: 1129	Dahlheimer Distributing			Check Sequence: 10	ACH Enabled: False
2447955	THC	212.50	05/01/2025	609-49750-50254	
2447957	N/A SALES	114.30	05/01/2025	609-49750-50250	
2447958	BEER	7,577.35	05/01/2025	609-49750-50252	
2447994	THC	69.00	05/01/2025	609-48000-50254	
2447995	LIQUOR	49.50	05/01/2025	609-48000-50251	
2447996	BEER	1,683.05	05/01/2025	609-48000-50252	
2448409	THC CREDIT	-6.00	05/01/2025	609-49750-50254	
2453473	THC	858.50	05/01/2025	609-49750-50254	
2453475	N/A SALES	299.70	05/01/2025	609-49750-50250	
2453476	BEER	7,865.75	05/01/2025	609-49750-50252	
2453737	N/A SALES	34.00	05/01/2025	609-48000-50250	
2453738	LIQUOR	49.50	05/01/2025	609-48000-50251	
2453739	BEER	2,416.80	05/01/2025	609-48000-50252	
	Check Total:	21,223.95			
Vendor: 1133	Dell Marketing, L.P.			Check Sequence: 11	ACH Enabled: False
10811594120	COMPUTER FOR PD	3,194.32	05/01/2025	101-41420-50207	
	Check Total:	3,194.32			
Vendor: 1981	EXPRESS SERVICES INC			Check Sequence: 12	ACH Enabled: False
32200582	TEMP EMPLOYEE	725.00	05/01/2025	101-41400-50300	
	Check Total:	725.00			

Invoice No	Description	Amount	Pmt Date	Acct Number	Reference
Vendor: 1706	Flaherty & Hood, P.A.			Check Sequence: 13	ACH Enabled: False
MAR 2025 GEN	GEN MUNI & REAL ESTATE MATTERS	1,003.75	05/01/2025	101-41910-50304	
MAR 2025 GEN	GEN MUNI & REAL ESTATE MATTERS	645.00	05/01/2025	101-00000-21182	
MAR 2025 GEN	GEN MUNI & REAL ESTATE MATTERS	537.50	05/01/2025	201-46500-50304	
MAR 2025 GEN	GEN MUNI & REAL ESTATE MATTERS	1,691.25	05/01/2025	101-41610-50304	
MAR 2025 GEN	GEN MUNI & REAL ESTATE MATTERS	1,390.00	05/01/2025	609-48000-50304	
	Check Total:	5,267.50			
Vendor: 2243	Guardian Fleet Safety, LLC			Check Sequence: 14	ACH Enabled: False
102658	REPAIR PARTS	689.63	05/01/2025	101-42110-50404	
	Check Total:	689.63			
Vendor: 2142	Insight Brewing Company, LLC			Check Sequence: 15	ACH Enabled: False
23330	THC	120.00	05/01/2025	609-49750-50254	
23330	BEER	87.75	05/01/2025	609-49750-50252	
	Check Total:	207.75			
Vendor: 1279	JOHNSON BROTHERS LIQUOR CO			Check Sequence: 16	ACH Enabled: False
2770258	LIQUOR	1,933.18	05/01/2025	609-49750-50251	
2770259	WINE	1,762.87	05/01/2025	609-49750-50253	
2770260	LIQUOR	0.15	05/01/2025	609-48000-50251	
2770261	LIQUOR	1,030.53	05/01/2025	609-49750-50251	
2770262	LIQUOR	1.82	05/01/2025	609-49750-50251	
2770264	WINE	351.99	05/01/2025	609-49750-50253	
2770265	WINE	507.22	05/01/2025	609-48000-50253	
2770266	LIQUOR	530.45	05/01/2025	609-48000-50251	
2770267	LIQUOR	539.10	05/01/2025	609-48000-50251	
2770268	WINE	464.09	05/01/2025	609-48000-50253	
2775132	LIQUOR	223.73	05/01/2025	609-48000-50251	
2775133	LIQUOR	1,711.38	05/01/2025	609-49750-50251	
2775134	LIQUOR	750.35	05/01/2025	609-49750-50251	
2775135	WINE	223.33	05/01/2025	609-49750-50253	
2775136	LIQUOR	305.25	05/01/2025	609-49750-50251	
2775137	WINE	1,039.91	05/01/2025	609-49750-50253	

Invoice No	Description	Amount	Pmt Date	Acct Number	Reference
2775138	LIQUOR	920.29	05/01/2025	609-48000-50251	
2775139	WINE	595.22	05/01/2025	609-48000-50253	
2775140	LIQUOR	383.46	05/01/2025	609-48000-50251	
2775141	WINE	73.82	05/01/2025	609-48000-50253	
	Check Total:	13,348.14			
Vendor: 1685	Lakes Brewing Company			Check Sequence: 17	ACH Enabled: False
002224	BEER	163.00	05/01/2025	609-49750-50252	
	Check Total:	163.00			
Vendor: 1302	Law Enforcement Labor Services			Check Sequence: 18	ACH Enabled: False
FOR MAY	UNION DUES	949.00	05/01/2025	101-00000-21708	
	Check Total:	949.00			
Vendor: 1643	McDonald Distributing			Check Sequence: 19	ACH Enabled: False
802207	THC	430.00	05/01/2025	609-48000-50254	
802207	THC	0.00	05/01/2025	609-49750-50254	
802207	BEER	2,766.25	05/01/2025	609-48000-50252	
802250	LIQUOR	1,020.90	05/01/2025	609-49750-50251	
802316	N/A SALES	42.80	05/01/2025	609-49750-50250	
802316	BEER	5,301.45	05/01/2025	609-49750-50252	
803336	BEER CREDIT	-160.50	05/01/2025	609-48000-50252	
803337	BEER	2,173.95	05/01/2025	609-48000-50252	
803360	LIQUOR	60.30	05/01/2025	609-49750-50251	
803361	N/A SALES	86.55	05/01/2025	609-49750-50250	
803361	BEER	4,695.15	05/01/2025	609-49750-50252	
803490	N/A SALES CREDIT	-44.09	05/01/2025	609-49750-50250	
803490	BEER CREDIT	-26.38	05/01/2025	609-49750-50252	
	Check Total:	16,346.38			
Vendor: 1404	MN Teamsters #320			Check Sequence: 20	ACH Enabled: False
FOR MAY	UNION DUES FOR MAY	1,765.00	05/01/2025	101-00000-21708	
	Check Total:	1,765.00			

Invoice No	Description	Amount	Pmt Date	Acct Number	Reference
Vendor: 1411	Moose Lake Brewing Co. LLC			Check Sequence: 21	ACH Enabled: False
SB14-014	BEER	75.00	05/01/2025	609-48000-50252	
SB18-013	BEER	126.00	05/01/2025	609-49750-50252	
SB19-002	BEER	51.00	05/01/2025	609-48000-50252	
SB19-003	BEER	72.00	05/01/2025	609-49750-50252	
	Check Total:	324.00			
Vendor: 1474	PHILLIPS WINE & SPIRITS, INC			Check Sequence: 22	ACH Enabled: False
6961950	WINE	182.12	05/01/2025	609-49750-50253	
6961951	WINE	405.52	05/01/2025	609-49750-50253	
6961951	LIQUOR	891.11	05/01/2025	609-49750-50251	
6961952	WINE	446.09	05/01/2025	609-48000-50253	
6965814	LIQUOR	1,076.36	05/01/2025	609-49750-50251	
6965815	WINE	222.00	05/01/2025	609-49750-50253	
6965816	LIQUOR	490.20	05/01/2025	609-48000-50251	
6965817	WINE	605.84	05/01/2025	609-48000-50253	
	Check Total:	4,319.24			
Vendor: 1534	Southern Glazers Wine & Spirits of Minnesota			Check Sequence: 23	ACH Enabled: False
2612432	LIQUOR	1,062.09	05/01/2025	609-48000-50251	
2612432	WINE	422.90	05/01/2025	609-48000-50253	
2612912	LIQUOR	1,338.39	05/01/2025	609-49750-50251	
2615097	LIQUOR	1,170.73	05/01/2025	609-48000-50251	
2615097	WINE	275.71	05/01/2025	609-48000-50253	
2615591	LIQUOR	1,216.17	05/01/2025	609-49750-50251	
2615592	WINE	933.29	05/01/2025	609-49750-50253	
	Check Total:	6,419.28			
Vendor: 2233	Standard Insurance Company			Check Sequence: 24	ACH Enabled: False
FOR MAY 2025	VISION FOR MAY	178.00	05/01/2025	101-00000-21706	
FOR MAY 2025	VISION CREDITS FEB/MAR/APR	-44.16	05/01/2025	101-00000-21706	
	Check Total:	133.84			
Vendor: 2237	Standard Insurance Company - RC			Check Sequence: 25	ACH Enabled: False

Invoice No	Description	Amount	Pmt Date	Acct Number	Reference
ER MAY 2025	ER LIFE FOR MAY	253.00	05/01/2025	101-00000-21714	
ER MAY 2025	ER STD FOR MAY	817.50	05/01/2025	101-00000-21715	
FOR MAY 2025	LTD FOR MAY	1,094.69	05/01/2025	101-00000-21715	
FOR MAY 2025	VOL LIFE FOR MAY	516.92	05/01/2025	101-00000-21714	
	Check Total:	2,682.11			
Vendor: 1550	Streichers			Check Sequence: 26	ACH Enabled: False
1756473	NEW HIRE UNIFORM ITEMS	114.98	05/01/2025	101-42110-50237	
1757043	NEW HIRE UNIFORM ITEMS	632.91	05/01/2025	101-42110-50237	
1757054	UNIFORM ITEMS-DS	100.84	05/01/2025	101-42110-50237	
1757177	NEW HIRE UNIFORM ITEMS	23.98	05/01/2025	101-42110-50237	
1757183	NEW HIRE UNIFORM ITEMS	23.98	05/01/2025	101-42110-50237	
1757312	NEW HIRE UNIFORM ITEMS	84.00	05/01/2025	101-42110-50237	
1757883	NEW HIRE UNIFORM ITEMS	273.99	05/01/2025	101-42110-50237	
	Check Total:	1,254.68			
Vendor: 1598	Viking Coca-Cola Bottling Co.			Check Sequence: 27	ACH Enabled: False
3657874	N/A SALES	189.50	05/01/2025	609-49750-50250	
	Check Total:	189.50			
Vendor: 1601	Vinocopia, Inc.			Check Sequence: 28	ACH Enabled: False
0369568-CM	WINE CREDIT	-138.50	04/17/2025	609-49750-50253	
0371799-IN	WINE	74.50	05/01/2025	609-48000-50253	
0371799-IN	LIQUOR	227.50	05/01/2025	609-48000-50251	
0371811-IN	LIQUOR	508.75	05/01/2025	609-49750-50251	
0371811-IN	WINE	75.75	05/01/2025	609-49750-50253	
	Check Total:	748.00			
Vendor: 1622	Wine Merchants			Check Sequence: 29	ACH Enabled: False
7516635	WINE	436.82	05/01/2025	609-48000-50253	
	Check Total:	436.82			
Vendor: 1867	Workstrategies			Check Sequence: 30	ACH Enabled: False
848583409	POST OFFER EMP TESTING	185.00	05/01/2025	101-42110-50314	

Invoice No	Description	Amount	Pmt Date	Acct Number	Reference
	Check Total:	185.00			
Vendor: 1628	WSB & Associates, Inc.			Check Sequence: 31	ACH Enabled: False
FEB 2025	R-028150-000-2 CED RIDGE PLAN REV	1,423.50	05/01/2025	101-00000-21178	
FEB 2025	R-026625-000-2 CITY PLANNING	2,940.00	05/01/2025	101-41910-50300	
FEB 2025	R-028163-000-1 CULVER'S PLAN REV	3,136.00	05/01/2025	101-00000-21180	
FEB 2025	R-027688-000-2 FLINK AVE	1,331.00	05/01/2025	486-46500-50303	
FEB 2025	R-027636-000-3 FOX RUN PHASE 2	2,497.50	05/01/2025	101-00000-21178	
FEB 2025	R-026625-000-2 SHERWOOD PINES	75.00	05/01/2025	101-00000-21177	
FEB 2025	R-026625-000-2 FISK ACRES	408.00	05/01/2025	101-00000-21182	
FEB 2025	R-024317-000-12 MEADOWS RID PLAN REV	2,711.00	05/01/2025	101-00000-21165	
FEB 2025	R-027792-000-2 RETAINER	2,090.00	05/01/2025	101-41700-50303	
FEB 2025	R-027889-000-1 GIS IMPLEMENTATION	7,640.50	05/01/2025	101-45000-50300	
FEB 2025	R-028009-000-2 LOCAL OVERLAY	13,471.25	05/01/2025	101-43000-50482	
FEB 2025	R-027113-000-5 SANITARY SEWER COMP	7,932.50	05/01/2025	602-49450-50303	
FEB 2025	R-028146-000-1 MAIN ST APT	2,850.50	05/01/2025	101-00000-21181	
FEB 2025	R-028099-000-1 FLINK/400TH STUDY	850.50	05/01/2025	101-00000-21165	
FEB 2025	R-019771-000-26 MS4 SERVICES	1,417.50	05/01/2025	612-49700-50303	
FEB 2025	R-027091-000-5 WASTEWATER	1,268.50	05/01/2025	602-49450-50303	
	Check Total:	52,043.25			
	Total for Check Run:	175,425.51			
	Total of Number of Checks:	31			

Accounts Payable

Computer Check Proof List by Vendor

User: TiffaniFolstad
Printed: 05/08/2025 - 12:58PM
Batch: 00002.05.2025 - 05082025

Invoice No	Description	Amount	Pmt Date	Acct Number	Reference
Vendor: 1005	Ace Solid Waste			Check Sequence: 1	ACH Enabled: False
11861948T067	TRASH SERVICE FOR MAY	63.36	05/08/2025	615-49550-50387	
11861948T067	TRASH SERVICE FOR MAY	69.43	05/08/2025	101-42280-50387	
11861948T067	TRASH SERVICE FOR MAY	261.52	05/08/2025	602-49450-50387	
11861948T067	TRASH SERVICE FOR MAY	111.22	05/08/2025	101-45500-50387	
11861948T067	TRASH SERVICE FOR MAY	149.77	05/08/2025	609-49750-50387	
11861948T067	TRASH SERVICE FOR MAY	335.64	05/08/2025	101-43000-50387	
11861948T067	TRASH SERVICE FOR MAY	107.28	05/08/2025	615-49550-50387	
11861948T067	TRASH SERVICE FOR MAY	210.45	05/08/2025	101-41940-50387	
	Check Total:	1,308.67			
Vendor: 1010	Alex Air Apparatus 2 LLC			Check Sequence: 2	ACH Enabled: False
52183	STORZ	1,137.60	05/08/2025	101-42280-50240	
	Check Total:	1,137.60			
Vendor: 1013	Allied Medical Training, LLC			Check Sequence: 3	ACH Enabled: False
4027	EMR RECERT	125.00	05/08/2025	101-42110-50332	
	Check Total:	125.00			
Vendor: 1662	AMAZON CAPITAL SERVICES			Check Sequence: 4	ACH Enabled: False
17HQ-1P7V-VR3X	CORDLESS VACUUM, SD CARDS	260.73	05/08/2025	101-42110-50210	
	Check Total:	260.73			
Vendor: 1646	Ameritas			Check Sequence: 5	ACH Enabled: False
0509 AMER	PR Batch 00001.05.2025 Ameritas 457 Employe	90.00	05/06/2025	101-00000-21705	PR Batch 00001.05.2025 Ameritas 457 Em

Invoice No	Description	Amount	Pmt Date	Acct Number	Reference
	Check Total:	90.00			
Vendor: 1025	Anderson and Koch Ford			Check Sequence: 6	ACH Enabled: False
2025-86714	2025 FORD EXPLORER-PD	47,006.84	05/08/2025	701-70100-50550	
2025-86970	2025 FORD EXPLORER-PD	47,006.84	05/08/2025	701-70100-50550	
2025-91255	2025 FORD EXPLORER-PD	47,006.84	05/08/2025	701-70100-50550	
	Check Total:	141,020.52			
Vendor: 1031	Aspen Mills			Check Sequence: 7	ACH Enabled: False
351828	UNIFORM ITEMS	209.30	05/08/2025	101-42280-50237	
	Check Total:	209.30			
Vendor: 1036	AT & T MOBILITY			Check Sequence: 8	ACH Enabled: False
287294265529X05	MOBILE SERVICES	1,457.75	05/08/2025	101-41420-50321	
	Check Total:	1,457.75			
Vendor: 1040	Axon Enterprise, Inc.			Check Sequence: 9	ACH Enabled: False
342579	TASER CARTRIDGES	1,338.00	05/01/2025	101-42110-50332	
	Check Total:	1,338.00			
Vendor: 1049	BELLBOY CORPORATION			Check Sequence: 10	ACH Enabled: False
0109753700	LIQUOR	0.00	05/08/2025	609-49750-50251	
0109753700	WINE	0.00	05/08/2025	609-49750-50253	
0109753700	N/A SALES	81.17	05/08/2025	609-49750-50250	
0109753700	LIQUOR	0.00	05/08/2025	609-48000-50251	
0109753700	THC	0.00	05/08/2025	609-49750-50254	
0109753700	OPERATING SUPPLIES	0.00	05/08/2025	609-48000-50210	
0109753700	OPERATING SUPPLIES	146.52	05/08/2025	609-49750-50210	
0109753800	OPERATING SUPPLIES	284.30	05/08/2025	609-48000-50210	
0207566100	THC	185.40	05/08/2025	609-48000-50254	
0207566100	LIQUOR	371.05	05/08/2025	609-48000-50251	
0207566100	WINE	0.00	05/08/2025	609-49750-50253	
0207566200	LIQUOR	1,076.25	05/08/2025	609-49750-50251	

Invoice No	Description	Amount	Pmt Date	Acct Number	Reference
	Check Total:	2,144.69			
Vendor: 1052	Bernicks			Check Sequence: 11	ACH Enabled: False
10351242	N/A SALES	298.50	05/08/2025	609-49750-50250	
10351242	BEER	5,567.05	05/08/2025	609-49750-50252	
10351243	BEER CREDIT	-176.00	05/08/2025	609-49750-50252	
10351249	THC	96.00	05/08/2025	609-48000-50254	
10351250	BEER	1,331.70	05/08/2025	609-48000-50252	
10351250	N/A SALES	29.00	05/08/2025	609-48000-50250	
10351251	BEER CREDIT	-7.20	05/08/2025	609-48000-50252	
	Check Total:	7,139.05			
Vendor: 1066	Breakthru Beverage MN			Check Sequence: 12	ACH Enabled: False
121229692	N/A SALES	121.65	05/08/2025	609-49750-50250	
121234035	BEER	154.00	05/08/2025	609-48000-50252	
121234741	LIQUOR	2,428.71	05/08/2025	609-48000-50251	
121234742	N/A SALES	105.65	05/08/2025	609-48000-50250	
121234861	LIQUOR	2,150.70	05/08/2025	609-49750-50251	
121235250	BEER	142.50	05/08/2025	609-49750-50252	
413355629	LIQUOR CREDIT	-23.15	05/08/2025	609-49750-50251	
	Check Total:	5,080.06			
Vendor: 1604	Wade A. Brown			Check Sequence: 13	ACH Enabled: False
297	PERKINS BLDG SECURITY	275.00	05/08/2025	101-49990-50300	
	Check Total:	275.00			
Vendor: 1082	Capitol Beverage Sales LP			Check Sequence: 14	ACH Enabled: False
3127081	BEER	1,390.40	05/01/2025	609-49750-50252	
3127081	N/A	180.68	05/01/2025	609-49750-50250	
3127081	THC	158.00	05/01/2025	609-49750-50254	
3127083	THC	167.00	05/01/2025	609-48000-50254	
3127083	N/A	88.00	05/01/2025	609-48000-50250	
3127083	BEER	424.00	05/01/2025	609-48000-50252	

Invoice No	Description	Amount	Pmt Date	Acct Number	Reference
	Check Total:	2,408.08			
Vendor: 1905	Cemstone Products Co., Inc.			Check Sequence: 15	ACH Enabled: False
7728905	POT HOLE PATCHING	374.31	05/08/2025	101-43000-50224	
	Check Total:	374.31			
Vendor: 1098	CHISAGO COUNTY AUDITOR-TREASURER			Check Sequence: 16	ACH Enabled: False
2025 COM UA	2025 COMMUNICATION AGREEMENT	8,757.87	05/08/2025	101-42280-50300	
2025 COM UA	2025 COMMUNICATION AGREEMENT	20,894.04	05/08/2025	101-42110-50300	
	Check Total:	29,651.91			
Vendor: 1105	Chisago County Senior Center			Check Sequence: 17	ACH Enabled: False
2025	SENIOR CENTER CONTRACT 2025	4,500.00	05/01/2025	101-49990-50300	
	Check Total:	4,500.00			
Vendor: 1114	Coffee Mill Inc			Check Sequence: 18	ACH Enabled: False
272426	PD COFFEE	231.00	05/08/2025	101-42110-50210	
272427	COFFEE AND SERVICE CHARGE	94.00	05/01/2025	101-41940-50210	
	Check Total:	325.00			
Vendor: 2072	Compass Minerals America Inc			Check Sequence: 19	ACH Enabled: False
1489962	ROAD SALT	27,903.23	05/08/2025	101-43000-50270	
1490435	ROAD SALT	30,530.35	05/08/2025	101-43000-50270	
1490930	ROAD SALT	20,260.61	05/08/2025	101-43000-50270	
1491405	ROAD SALT	15,483.85	05/08/2025	101-43000-50270	
1494236	ROAD SALT	2,434.52	05/08/2025	101-43000-50270	
1494720	ROAD SALT	22,379.16	05/08/2025	101-43000-50270	
1495640	ROAD SALT	2,477.66	05/08/2025	101-43000-50270	
	Check Total:	121,469.38			
Vendor: 2195	Creative Earth Innovations, LLC			Check Sequence: 20	ACH Enabled: False
050525	CLEAN/MOW PERKINS LOT	300.00	05/08/2025	101-49990-50300	
	Check Total:	300.00			

Invoice No	Description	Amount	Pmt Date	Acct Number	Reference
Vendor: 1122	Crystal Springs Ice			Check Sequence: 21	ACH Enabled: False
02-501145	N/A SALES	182.00	05/01/2025	609-48000-50250	
02-501168	N/A SALES	293.12	05/01/2025	609-49750-50250	
	Check Total:	475.12			
Vendor: 1129	DAHLHEIMER DISTRIBUTING			Check Sequence: 22	ACH Enabled: False
2459056	LIQUOR	148.50	05/08/2025	609-49750-50251	
2459093	N/A SALES	0.00	05/08/2025	609-49750-50250	
2459093	N/A SALES	33.85	05/08/2025	609-48000-50250	
2459094	LIQUOR	157.50	05/08/2025	609-48000-50251	
2459095	BEER	3,827.40	05/08/2025	609-48000-50252	
2459096	N/A SALES	31.00	05/08/2025	609-49750-50250	
2459097	THC	154.00	05/08/2025	609-49750-50254	
2459098	BEER	13,044.15	05/08/2025	609-49750-50252	
	Check Total:	17,396.40			
Vendor: 1143	Dr Pepper Snapple Group			Check Sequence: 23	ACH Enabled: False
4849204009	N/A SALES	228.00	05/08/2025	609-49750-50250	
	Check Total:	228.00			
Vendor: 1144	Dresser Trap Rock, Inc.			Check Sequence: 24	ACH Enabled: False
149388	RIVERWALK PK BRIDGE REPAIR	660.58	05/08/2025	612-49700-50407	
	Check Total:	660.58			
Vendor: 1151	ECM Publishers, Inc.			Check Sequence: 25	ACH Enabled: False
1044046	SPRING CLEAN UP AD	186.10	05/08/2025	101-41910-50351	
1045021	SPRING CLEAN UP AD	173.90	05/08/2025	101-41910-50351	
	Check Total:	360.00			
Vendor: 1981	EXPRESS SERVICES INC			Check Sequence: 26	ACH Enabled: False
32226505	TEMP HELP 25 HOURS	725.00	05/08/2025	101-41400-50300	
32262670	TEMP HELP 25 HOURS	725.00	05/08/2025	101-41400-50300	
	Check Total:	1,450.00			

Invoice No	Description	Amount	Pmt Date	Acct Number	Reference
Vendor: 1180	Ferguson US Holdings, Inc			Check Sequence: 27	ACH Enabled: False
544196-1	200 WATER METERS MIUS	26,800.00	05/08/2025	615-49550-50210	
544963	CREDIT FOR OVERPAYMENT	-37.86	05/08/2025	615-49550-50210	
	Check Total:	26,762.14			
Vendor: 1216	Gopher State One-Call, Inc.			Check Sequence: 28	ACH Enabled: False
5040646	466 BILLABLE LOCATES APRIL	209.70	05/08/2025	612-49700-50300	
5040646	466 BILLABLE LOCATES APRIL	209.70	05/08/2025	602-49450-50300	
5040646	466 BILLABLE LOCATES APRIL	209.70	05/08/2025	615-49550-50300	
	Check Total:	629.10			
Vendor: 2079	Great River Energy			Check Sequence: 29	ACH Enabled: False
M1825660	BATTERY BANK ANN. TEST	1,167.00	05/08/2025	620-49600-50300	
	Check Total:	1,167.00			
Vendor: 2244	MATTHEW HILL			Check Sequence: 30	ACH Enabled: False
0422 REG MTG	REGIONAL ADMIN MTG LUNCH	19.91	05/08/2025	101-41310-50331	
0422 REG MTG	REGIONAL ADMIN MTG CHISAGO	22.96	05/08/2025	101-41310-50331	
0423 COMM MTG	COMMUNITY LEADERSHIP CHISAGO	17.43	05/08/2025	101-41310-50331	
	Check Total:	60.30			
Vendor: 1249	Mitchell Holmes			Check Sequence: 31	ACH Enabled: False
1097	SCBA COMP ANNUAL	1,127.02	05/08/2025	101-42280-50404	
	Check Total:	1,127.02			
Vendor: 2251	IMAGETREND, LLC			Check Sequence: 32	ACH Enabled: False
115559	ANNUAL FEE	1,500.00	05/08/2025	101-42280-50300	
	Check Total:	1,500.00			
Vendor: 1265	Isanti-Chisago County Star			Check Sequence: 33	ACH Enabled: False
831671	PUB HEARING CEDAR RIDGE	8.78	05/01/2025	101-41910-50351	
831672	PUB HEARING BIGFORK	10.24	05/01/2025	101-41910-50351	
968406	ADVERTISING	70.00	05/08/2025	609-49750-50340	

Invoice No	Description	Amount	Pmt Date	Acct Number	Reference
	Check Total:	89.02			
Vendor: 1269	IUOE Local 49 Fringe Benefit			Check Sequence: 34	ACH Enabled: False
FOR APR 2025	HEALTH FOR APR	3,130.00	05/01/2025	101-00000-21706	
FOR JUNE 2025	HEALTH FOR JUNE	20,345.00	05/01/2025	101-00000-21706	
	Check Total:	23,475.00			
Vendor: 1279	JOHNSON BROTHERS LIQUOR CO			Check Sequence: 35	ACH Enabled: False
2780428	LIQUOR	543.64	05/08/2025	609-48000-50251	
2780429	LIQUOR	1,531.54	05/08/2025	609-49750-50251	
2780430	LIQUOR	1,703.52	05/08/2025	609-49750-50251	
2780430	BEER	0.00	05/08/2025	609-49750-50252	
2780431	LIQUOR	1,846.42	05/08/2025	609-49750-50251	
2780432	WINE	73.82	05/08/2025	609-49750-50253	
2780433	LIQUOR	911.98	05/08/2025	609-49750-50251	
2780434	THC	322.75	05/08/2025	609-49750-50254	
2780435	WINE	274.68	05/08/2025	609-49750-50253	
2780436	LIQUOR	1,106.92	05/08/2025	609-48000-50251	
2780437	LIQUOR	410.70	05/08/2025	609-48000-50251	
2780438	LIQUOR	338.42	05/08/2025	609-48000-50251	
2780439	LIQUOR	398.10	05/08/2025	609-48000-50251	
2780440	WINE	105.69	05/08/2025	609-48000-50253	
	Check Total:	9,568.18			
Vendor: 1304	League Of Minnesota Cities			Check Sequence: 36	ACH Enabled: False
429096	LMC ANNUAL CONF. -MAYOR	490.00	05/08/2025	101-41110-50332	
429096	LMC Annual Conference - Mayor	490.00	05/01/2025	101-41110-50332	
	Check Total:	980.00			
Vendor: 1308	LegalShield			Check Sequence: 37	ACH Enabled: False
FOR MAY	PAYROLL LIAB-LEG SERVICE	46.85	05/08/2025	101-00000-21712	
	Check Total:	46.85			
Vendor: 1907	LJJ Wastwater Maintenance, Inc.			Check Sequence: 38	ACH Enabled: False

Invoice No	Description	Amount	Pmt Date	Acct Number	Reference
0425-1843 CITY	JETTING/CLEAN/TELEVISED MAIN	2,565.00	05/08/2025	602-49450-50407	
0425-1843 FOX	JETTING/CLEAN/TELEVISED MAIN	5,290.00	05/08/2025	101-00000-21140	
	Check Total:	7,855.00			
Vendor: 1321	LOCATORS & SUPPLIERS, INC.			Check Sequence: 39	ACH Enabled: False
320082	MARKING PAINT	273.36	05/08/2025	602-49450-50210	
320128	MARKING PAINT	552.78	05/08/2025	615-49550-50210	
320128	MARKING PAINT	220.00	05/08/2025	602-49450-50210	
	Check Total:	1,046.14			
Vendor: 1176	M Health Fairview			Check Sequence: 40	ACH Enabled: False
15008257217	VISIST 15008257217 ON 3/25/2025	603.04	05/08/2025	101-42110-50314	
	Check Total:	603.04			
Vendor: 1327	Macqueen Equipment Inc.			Check Sequence: 41	ACH Enabled: False
P64455	SWEEPER BROOMS	898.40	05/08/2025	612-49700-50404	
R03706	VAC TRUCK RENTAL	10,600.00	05/08/2025	602-49450-50407	
	Check Total:	11,498.40			
Vendor: 1333	Consulting Psychologists, Inc. Martin-Mcallister			Check Sequence: 42	ACH Enabled: False
16829	NEW HIRE ASSESSMENTS	1,300.00	05/08/2025	101-42110-50314	
	Check Total:	1,300.00			
Vendor: 1643	McDonald Distributing			Check Sequence: 43	ACH Enabled: False
804478	LIQUOR	120.60	05/08/2025	609-49750-50251	
804479	THC	217.52	05/08/2025	609-49750-50254	
804479	LIQUOR	33.60	05/08/2025	609-49750-50251	
804479	BEER	8,256.30	05/08/2025	609-49750-50252	
804479	N/A SALES	108.90	05/08/2025	609-49750-50250	
804495	LIQUOR	180.90	05/08/2025	609-48000-50251	
804495	BEER	1,950.95	05/08/2025	609-48000-50252	
804495	N/A SALES	64.20	05/08/2025	609-48000-50250	
8860642	BEER CREDIT	-37.20	05/08/2025	609-49750-50252	
8860643	BEER CREDIT	-12.70	05/08/2025	609-48000-50252	

Invoice No	Description	Amount	Pmt Date	Acct Number	Reference
	Check Total:	10,883.07			
Vendor: 1644	Mega Beer			Check Sequence: 44	ACH Enabled: False
IN-24559	BEER	175.50	05/08/2025	609-48000-50252	
IN-24559	THC	231.95	05/08/2025	609-48000-50254	
	Check Total:	407.45			
Vendor: 1347	MES I ACQUISITION INC.			Check Sequence: 45	ACH Enabled: False
2248026	LEATHER BOOTS	461.00	05/08/2025	101-42280-50201	
	Check Total:	461.00			
Vendor: 1348	Metro Sales Inc.			Check Sequence: 46	ACH Enabled: False
2779577	COPY MACHINE LEASE FOR MAY 2025	259.00	05/01/2025	101-41420-50219	
	Check Total:	259.00			
Vendor: 1353	Midcontinent			Check Sequence: 47	ACH Enabled: False
16640100114693	INTERNET 4/25 TO 5/24	920.39	05/08/2025	101-41420-50243	
	Check Total:	920.39			
Vendor: 1364	Minnesota Elevator, Inc.			Check Sequence: 48	ACH Enabled: False
1126823	MONTHLY ELEVATOR INSPECTION	135.00	05/08/2025	101-41940-50300	
	Check Total:	135.00			
Vendor: 1376	MMUA			Check Sequence: 49	ACH Enabled: False
66182	HR PRE EMP DRUG TEST	75.00	05/08/2025	101-41430-50314	
66182	PD PRE EMP DRUG TEST	225.00	05/08/2025	101-42110-50314	
66182	PW PRE EMP DRUG TEST	150.00	05/08/2025	101-43000-50406	
	Check Total:	450.00			
Vendor: 1381	MCMA Secretariat, Leage of MN Cities MN City/County Mgmt. Assn.			Check Sequence: 50	ACH Enabled: False
2025 MCMA	2025 MEMBERSHIP	180.00	05/01/2025	101-41310-50433	
	Check Total:	180.00			
Vendor: 1411	Moose Lake Brewing Co. LLC			Check Sequence: 51	ACH Enabled: False

Invoice No	Description	Amount	Pmt Date	Acct Number	Reference
SB20-006	BEER	72.00	05/08/2025	609-49750-50252	
	Check Total:	72.00			
Vendor: 2203	Morris Electronics, Inc.			Check Sequence: 52	ACH Enabled: False
12004	CITY IT SUPPORT 01/28	250.00	05/01/2025	101-41420-50300	
12353	CITY IT SUPPORT 02/13	125.00	05/01/2025	101-41420-50300	
12532	CITY IT SUPPORT 02/24	62.50	05/01/2025	101-41420-50300	
12581	PD IT SUPPORT 02/28	250.00	05/01/2025	101-41420-50300	
12961	FD IT SUPPORT 03/24	62.50	05/01/2025	101-41420-50300	
12996	PD IT SUPPORT 03/26	62.50	05/01/2025	101-41420-50300	
13009	PD IT SUPPORT 03/26	125.00	05/01/2025	101-41420-50300	
13010	PW IT SUPPORT 03/28	62.50	05/01/2025	101-41420-50300	
13027	CITY IT SUPPORT 03/28	62.50	05/01/2025	101-41420-50300	
13142	PD IT SUPPORT 4/01	875.00	05/01/2025	101-41420-50300	
13154	PLANNING DEPT IT SUPPORT 4/02	62.50	05/01/2025	101-41420-50300	
13159	CITY IT SUPPORT 4/02	62.50	05/01/2025	101-41420-50300	
13164	PD IT SUPPORT 4/02	125.00	05/01/2025	101-41420-50300	
13179	PD IT SUPPORT 4/07	187.50	05/01/2025	101-41420-50300	
13193	PD IT SUPPORT 4/09	93.75	05/01/2025	101-41420-50300	
13214	PD IT SUPPORT 4/11	93.75	05/01/2025	101-41420-50300	
13232	PD IT SUPPORT 4/16	93.75	05/01/2025	101-41420-50300	
	Check Total:	2,656.25			
Vendor: 1414	MPCA - 6th Floor			Check Sequence: 53	ACH Enabled: False
WW CERT-SW	WASTEWATER OP CERT-SW	15.00	05/08/2025	602-49450-50332	
	Check Total:	15.00			
Vendor: 1423	N.B. Area Public Schools-Fuel			Check Sequence: 54	ACH Enabled: False
FOR MAR 2025	MOTOR FUELS-PD	2,095.35	05/08/2025	101-42110-50212	
FOR MAR 2025	MOTOR FUELS-PW	368.18	05/08/2025	101-43000-50212	
FOR MAR 2025	MOTOR FUELS-WW	114.00	05/08/2025	602-49450-50212	
FOR MAR 2025	MOTOR FUELS-WATER	152.32	05/08/2025	615-49550-50212	
FOR MAR 2025	MOTOR FUELS-FD	413.90	05/08/2025	101-42280-50212	
FOR MAR 2025	MOTOR FUELS-BLDG	70.45	05/08/2025	101-42400-50212	

Invoice No	Description	Amount	Pmt Date	Acct Number	Reference
FOR MAR 2025	MOTOR FUELS-PARKS	53.07	05/08/2025	101-45000-50212	
	Check Total:	3,267.27			
Vendor: 2047	NEONLINK LLC			Check Sequence: 55	ACH Enabled: False
3091	WEB PORTAL SUBSCRIPTION	84.20	05/08/2025	602-49450-50300	
3091	WEB PORTAL SUBSCRIPTION	84.20	05/08/2025	612-49700-50300	
3091	WEB PORTAL SUBSCRIPTION	84.20	05/08/2025	615-49550-50300	
	Check Total:	252.60			
Vendor: 1893	Parman Energy Group, LLC			Check Sequence: 56	ACH Enabled: False
303113	AERATOR GEAR OIL & ELEC MOT OIL	495.92	05/08/2025	602-49450-50210	
303113B	AERATOR GEAR OIL	606.38	05/08/2025	602-49450-50210	
	Check Total:	1,102.30			
Vendor: 1465	Paustis Wine Company			Check Sequence: 57	ACH Enabled: False
264066	WINE	871.50	05/08/2025	609-48000-50253	
264067	WINE	362.50	05/08/2025	609-49750-50253	
	Check Total:	1,234.00			
Vendor: 1472	Petersons North Branch Mill			Check Sequence: 58	ACH Enabled: False
163442	FERTILIZER	252.85	05/08/2025	101-45000-50210	
163566	WASH OUT REPAIR FAWN AVE	104.62	05/08/2025	612-49700-50407	
163890	CURB AND SIDEWALK SPRAY	640.00	05/08/2025	612-49700-50210	
	Check Total:	997.47			
Vendor: 1474	PHILLIPS WINE & SPIRITS, INC			Check Sequence: 59	ACH Enabled: False
6969966	N/A SALES	149.91	05/08/2025	609-48000-50250	
6969967	LIQUOR	1,961.23	05/08/2025	609-49750-50251	
6969968	LIQUOR	266.35	05/08/2025	609-49750-50251	
6969968	WINE	73.82	05/08/2025	609-49750-50253	
6969969	N/A SALES	281.59	05/08/2025	609-49750-50250	
6969970	LIQUOR	343.21	05/08/2025	609-48000-50251	
6969971	LIQUOR	266.35	05/08/2025	609-48000-50251	

Invoice No	Description	Amount	Pmt Date	Acct Number	Reference
	Check Total:	3,342.46			
Vendor: 1482	Post Haste Business Solutions			Check Sequence: 60	ACH Enabled: False
138890	DOOR HANGERS	46.68	05/08/2025	602-49450-50210	
138890	DOOR HANGERS	46.66	05/08/2025	615-49550-50210	
138890	DOOR HANGERS	46.66	05/08/2025	101-43000-50210	
139285	NAME PLATE- OTTO	17.99	05/01/2025	101-41910-50210	
139495	ATV/UTV/GOLF CART PERMITS	280.00	05/08/2025	101-42110-50210	
	Check Total:	437.99			
Vendor: 2232	Pryes Brewing Company LLC			Check Sequence: 61	ACH Enabled: False
W-96592	BEER	111.00	05/01/2025	609-48000-50252	
W-96596	BEER	129.00	05/01/2025	609-49750-50252	
	Check Total:	240.00			
Vendor: 2019	QUADIENT, INC			Check Sequence: 62	ACH Enabled: False
Q1832123	BILL STUFFER QUARTER 3	137.99	05/08/2025	602-49450-50210	
Q1832123	BILL STUFFER QUARTER 3	137.99	05/08/2025	615-49550-50210	
Q1832123	BILL STUFFER QUARTER 3	137.99	05/08/2025	612-49700-50210	
	Check Total:	413.97			
Vendor: 1494	Red Bull Distribution Company			Check Sequence: 63	ACH Enabled: False
2025220841	N/A SALES	319.40	05/08/2025	609-49750-50250	
	Check Total:	319.40			
Vendor: 2066	RMB Environmental Laboratories, Inc.			Check Sequence: 64	ACH Enabled: False
B016866	WASTEWATER LAB TEST	142.10	05/08/2025	602-49450-50315	
B016943	WASTEWATER LAB TEST	142.10	05/08/2025	602-49450-50315	
B016946	WATER PLANT SAMPLES	105.00	05/08/2025	615-49550-50315	
B017035	WASTEWATER LAB TEST	142.10	05/08/2025	602-49450-50315	
B017127	WASTEWATER LAB TEST	142.10	05/08/2025	602-49450-50315	
	Check Total:	673.40			
Vendor: 1513	Safe-Fast, Inc.			Check Sequence: 65	ACH Enabled: False

Invoice No	Description	Amount	Pmt Date	Acct Number	Reference
307436	SHIRTS/JACKETS FOR ALL PW	2,353.14	05/08/2025	101-43000-50237	
307446	UNIFORM ALLOW-GF	291.50	05/08/2025	101-43000-50237	
307447	UNIFORM ALLOW-BG	216.00	05/08/2025	101-43000-50237	
307448	UNIFORM ALLOW-DFS	154.00	05/08/2025	101-43000-50237	
307449	UNIFORM ALLOW-JM	68.00	05/08/2025	602-49450-50237	
307450	SAFETY GLASSES-SW	36.00	05/08/2025	101-43000-50237	
307451	UNIFORM ALLOW-JM	63.85	05/08/2025	615-49550-50237	
307452	UNIFORM ALLOW-PL	68.00	05/08/2025	602-49450-50237	
	Check Total:	3,250.49			
Vendor: 2116	Amy Schweigert			Check Sequence: 66	ACH Enabled: False
1165	NBPD THERAPY	900.00	05/01/2025	101-42110-50300	
	Check Total:	900.00			
Vendor: 1524	Sirchie			Check Sequence: 67	ACH Enabled: False
690614	OPERATING SUPPLIES	103.53	05/01/2025	101-42110-50210	
	Check Total:	103.53			
Vendor: 1534	SOUTHERN GLAZERS WINE & SPIRITS OF MINNESOTA			Check Sequence: 68	ACH Enabled: False
2617889	LIQUOR	2,633.40	05/08/2025	609-48000-50251	
2618432	LIQUOR	3,905.17	05/08/2025	609-49750-50251	
2618433	WINE	465.19	05/08/2025	609-49750-50253	
	Check Total:	7,003.76			
Vendor: 1542	Staples			Check Sequence: 69	ACH Enabled: False
6031400505	OFFICE SUPPLIES	188.05	05/08/2025	609-49750-50210	
6031400506	OFFICE SUPPLIES	146.61	05/08/2025	609-48000-50210	
7004721522	OFFICE SUPPLIES	170.55	05/08/2025	101-41940-50210	
7004721522	OFFICE SUPPLIES	17.18	05/08/2025	101-41940-50210	
7004721522	COUNCIL CHAMBERS CALENDAR	20.59	05/08/2025	101-41940-50210	
7004721522	OFFICE SUPPLIES	14.39	05/08/2025	101-41940-50210	
	Check Total:	557.37			
Vendor: 1550	STREICHERS			Check Sequence: 70	ACH Enabled: False

Invoice No	Description	Amount	Pmt Date	Acct Number	Reference
1760231	SRO/SHIRTS	585.00	05/08/2025	101-42110-50237	
	Check Total:	585.00			
Vendor: 1566	The Dama - MP Inc.			Check Sequence: 71	ACH Enabled: False
16938	12 LOCKBOXES	120.00	05/08/2025	208-42280-50210	
	Check Total:	120.00			
Vendor: 1751	The Whitesidewalls			Check Sequence: 72	ACH Enabled: False
07-15 ECRAC	7/15 CONCERT DEPOSIT	1,250.00	05/08/2025	403-46500-50300	
	Check Total:	1,250.00			
Vendor: 2239	Thomas Scientific Holdings, LLC			Check Sequence: 73	ACH Enabled: False
180819	OPERATING SUPPLIES/TIE DOWN	57.65	05/08/2025	101-42110-50210	
	Check Total:	57.65			
Vendor: 1586	Uline			Check Sequence: 74	ACH Enabled: False
33588539	LATEX GLOVES	88.84	05/08/2025	615-49550-50210	
33588539	BOOT SCRAPER	75.84	05/08/2025	620-49600-50210	
	Check Total:	164.68			
Vendor: 1827	Urban Growler Brewing Company, LLC			Check Sequence: 75	ACH Enabled: False
E-39561	BEER	277.00	05/08/2025	609-49750-50252	
	Check Total:	277.00			
Vendor: 1597	Vessco, Inc.			Check Sequence: 76	ACH Enabled: False
97309	PRETREAT SCREENS	941.67	05/08/2025	602-49450-50404	
	Check Total:	941.67			
Vendor: 1598	Viking Coca-Cola Bottling Co.			Check Sequence: 77	ACH Enabled: False
3657918	N/A SALES	198.85	05/08/2025	609-49750-50250	
	Check Total:	198.85			
Vendor: 1601	VINOCOPIA, Inc.			Check Sequence: 78	ACH Enabled: False
0372384-IN	WINE	224.00	05/08/2025	609-49750-50253	

Invoice No	Description	Amount	Pmt Date	Acct Number	Reference
	Check Total:	224.00			
Vendor: 1611	WATSON COMPANY			Check Sequence: 79	ACH Enabled: False
149127	N/A SALES	1,297.25	05/01/2025	609-49750-50250	
149298	OPERATIONS SUPPLIES	32.32	05/08/2025	609-48000-50210	
149298	N/A SALES	1,558.21	05/08/2025	609-49750-50250	
149298	OPERATIONS SUPPLIES	64.64	05/08/2025	609-49750-50210	
	Check Total:	2,952.42			
Vendor: 2182	WESTERN STATES ENVELOPE COMPANY			Check Sequence: 80	ACH Enabled: False
281926	AP ENVELOPES	142.44	05/01/2025	101-41940-50210	
284080	AP ENVELOPES	225.30	05/01/2025	101-41940-50210	
284422	ENVELOPES FOR BILLING	130.71	05/08/2025	615-49550-50210	
284422	ENVELOPES FOR BILLING	130.71	05/08/2025	602-49450-50210	
284422	ENVELOPES FOR BILLING	130.72	05/08/2025	612-49700-50210	
284848	AP ENVELOPES -RETURN	-92.28	05/01/2025	101-41940-50210	
	Check Total:	667.60			
Vendor: 1621	Windstream			Check Sequence: 81	ACH Enabled: False
011734875 MAY	LANDLINES & FAXES 4/25 TO 4/24	319.30	05/08/2025	101-41420-50321	
	Check Total:	319.30			
Vendor: 1622	WINE MERCHANTS			Check Sequence: 82	ACH Enabled: False
7517585	WINE	129.82	05/08/2025	609-48000-50253	
	Check Total:	129.82			
Vendor: 1636	ZEP Manufacturing Co.			Check Sequence: 83	ACH Enabled: False
9011083290	CLEANING SUPPLIES	125.00	05/08/2025	101-42280-50210	
9011083290	CLEANING SUPPLIES	354.90	05/08/2025	101-43000-50210	
9011083290	CLEANING SUPPLIES	125.00	05/08/2025	101-42110-50210	
	Check Total:	604.90			
Vendor: 1637	Ziegler Cat			Check Sequence: 84	ACH Enabled: False
1878735	SQUAD BATTERIES	542.05	05/08/2025	101-42110-50404	

Invoice No	Description	Amount	Pmt Date	Acct Number	Reference
1878735	WAT PLANT 2 GEN PARTS	175.97	05/08/2025	615-49550-50404	
1878735	PW BATTERIES	343.04	05/08/2025	101-43000-50404	
1899214	ENGINE AIR FILTER-GRADER	168.66	05/08/2025	101-43000-50404	
	Check Total:	1,229.72			
	Total for Check Run:	479,150.12			
	Total of Number of Checks:	84			

Accounts Payable

Checks by Date - Summary by Check Date

User: TiffaniFolstad
Printed: 5/8/2025 10:53 AM

Check No	Vendor No	Vendor Name	Check Date	Check Amount
5771	1941	WEX, Inc.	01/14/2025	2,999.88
			Total for 1/14/2025:	2,999.88
5772	1824	Stearns Bank	01/31/2025	75.59
			Total for 1/31/2025:	75.59
5773	1397	MN PFA	02/18/2025	59,627.93
			Total for 2/18/2025:	59,627.93
5775	2170	Pathpoint Merchant Services LLC	03/03/2025	1,705.41
			Total for 3/3/2025:	1,705.41
5781	2096	Xpress Solutions Inc	03/06/2025	2,011.91
			Total for 3/6/2025:	2,011.91
5778	1362	Minnesota Dept of Revenue	03/10/2025	26,851.00
5779	1362	Minnesota Dept of Revenue	03/10/2025	1,091.00
			Total for 3/10/2025:	27,942.00
5780	1033	Associated Bank	03/14/2025	66.40
			Total for 3/14/2025:	66.40
5782	1424	N.B. Fire Relief Association	03/18/2025	381.00
			Total for 3/18/2025:	381.00
5776	1941	WEX, Inc.	03/25/2025	110.50
			Total for 3/25/2025:	110.50
5777	1592	US Postal Service	03/26/2025	1,102.34
			Total for 3/26/2025:	1,102.34
5774	1886	US Bank - Bond Pymts	03/28/2025	307,153.93
			Total for 3/28/2025:	307,153.93

Check No	Vendor No	Vendor Name	Check Date	Check Amount
5783	1424	N.B. Fire Relief Association	03/31/2025	419.25
			Total for 3/31/2025:	419.25
5770	1365	Minnesota Energy Resources	04/01/2025	4,466.71
			Total for 4/1/2025:	4,466.71
5792	2170	Pathpoint Merchant Services LLC	04/02/2025	1,812.99
			Total for 4/2/2025:	1,812.99
5793	1044	Bank Charges, Miscellaneous	04/07/2025	0.75
			Total for 4/7/2025:	0.75
5799	2096	Xpress Solutions Inc	04/08/2025	2,234.34
			Total for 4/8/2025:	2,234.34
5796	1362	Minnesota Dept of Revenue	04/11/2025	30,914.00
5797	1362	Minnesota Dept of Revenue	04/11/2025	1,062.00
5801	1424	N.B. Fire Relief Association	04/11/2025	440.25
5804	1941	WEX, Inc.	04/11/2025	5,769.92
			Total for 4/11/2025:	38,186.17
5798	1033	Associated Bank	04/15/2025	69.50
			Total for 4/15/2025:	69.50
5800	2146	Bremer Bank	04/22/2025	98.69
			Total for 4/22/2025:	98.69
5784	1630	XCEL Energy	04/25/2025	1,253.02
5785	1585	United States Treasury	04/25/2025	38,069.43
5786	1431	Nationwide Retirement Solution	04/25/2025	5.00
5787	1372	Minnesota State Retirement	04/25/2025	2,609.42
5788	1118	Commissioner Of Revenue (W/H)	04/25/2025	8,408.21
5789	1468	PERA (Payroll W/H)	04/25/2025	36,210.72
5791	1424	N.B. Fire Relief Association	04/25/2025	4,000.00
5794	1941	WEX, Inc.	04/25/2025	106.75
5795	1592	US Postal Service	04/25/2025	1,102.50
5803	1941	WEX, Inc.	04/25/2025	6,836.59
			Total for 4/25/2025:	98,601.64
5802	1424	N.B. Fire Relief Association	04/28/2025	489.75
			Total for 4/28/2025:	489.75
5790	1941	WEX, Inc.	04/29/2025	1,000.00
			Total for 4/29/2025:	1,000.00

Check No	Vendor No	Vendor Name	Check Date	Check Amount
			Report Total (35 checks):	550,556.68

Accounts Payable

Checks by Date - Summary by Check Date

User: TiffaniFolstad
Printed: 5/8/2025 10:56 AM

Check No	Vendor No	Vendor Name	Check Date	Check Amount
5749	2170	Pathpoint Merchant Services LLC	02/03/2025	1,699.37
			Total for 2/3/2025:	1,699.37
			Report Total (1 checks):	1,699.37

Accounts Payable

Checks by Date - Summary by Check Date

User: TiffaniFolstad
Printed: 5/8/2025 10:57 AM

Check No	Vendor No	Vendor Name	Check Date	Check Amount
5752	1592	US Postal Service	02/26/2025	1,112.04
			Total for 2/26/2025:	1,112.04
			Report Total (1 checks):	1,112.04

City of North Branch
Special Council Meeting 6:00pm
Minutes
April 17, 2025

1. **Call to Order**
   Mayor Schieber called the meeting to order at 6:00 pm

2. **Pledge of Allegiance**
   Mayor Schieber led the Pledge of Allegiance

3. **Roll Call**
   Council Members Goulet, Canada, Mayor Schieber.
   - **a.** Oath of Office was taken by Patrick Meacham adding him to the Council Members present.

4. **2025 Local Board of Appeal & Equalization**
   - **a.** Chase Peloquin led the discussion on the Chisago County residential and commercial appraisals for the City of North Branch. The following properties, owners and representatives were heard by the City Council.
     - **i.** Trisha Williams: 11.00043.00 – Mobile Home Park/Pleasant Valley. Member Meacham made a motion for no change, seconded by Goulet. All Aye. Passed unanimously.
     - **ii.** Sahajanand LLC: 16.00129.00 – Budget Host Hotel. Mayor Schieber made a motion for no change, seconded by Canada. All Aye. Passed unanimously.
     - **iii.** Radhe Hospitality LLC: 16.00478.10 – Americinn Hotel. Member Goulet made a motion for no change, seconded by Canada, All Aye, Passed unanimously.
     - **iv.** Ruddy's Isanti Trail LLC: 11.00400.00. Mayor Schieber made a motion for no change, seconded by Canada, All Aye, Passed unanimously.
     - **v.** RDF Inc: 16.00103.00 – request in writing. Mayor Schieber made a motion for no change, seconded by Canada, All Aye, Passed unanimously.
     - **vi.** Aaron Hodgson: 11.00618.00 – request in writing. Mayor Schieber made a motion for no change, seconded by Canada, All Aye, Passed unanimously.

Adjournment
Being no further business before the City Council, Schieber moved, seconded by Goulet, to adjourn the meeting at 6:52pm. All Aye, passed unanimously. Meeting is adjourned.

_____
Kevin Schieber, Mayor
ATTEST:
_____
Matthew Hill, City Administrator

North Branch City Council Minutes

TUESDAY, APRIL 22, 2025, 7:00 PM

City Hall, 6408 Elm St., North Branch, MN 55056

Members present:

Robert Canada, Jeff Goulet, Mayor Kevin Schieber, Patrick Meacham and various staff

1. CALL TO ORDER
    a. Mayor Schieber called the meeting to order at 7:00 pm and led the Pledge of Allegiance.
2. PLEDGE OF ALLEGIANCE
3. ROLL CALL – All Council Members in attendance.
4. AGENDA APPROVAL – Mayor Schieber requested to move 7.n. from consent agenda to 9.e. in Staff Reports. Member Meacham made a motion to accept agenda as amended, seconded by Member Canada, All Aye, passed unanimously.
5. PRESENTATION & PROCLAMATION -
    a. Presentation from Lynn Cornwell from Morteton Capital Markets – shared current investment position, and past couple of years data.
    b. The Mayor led an Arbor Day 2025 Proclamation and invited the public to attend Tree City Event at Clayton Anderson Park on April 25 at 5pm.
6. PUBLIC COMMENT –
    a. None
7. CONSENT AGENDA – motion by Member Goulet, second by Member Canada, All Aye, passed unanimously.

    a. Claims

    b. Approval of Minutes - Special Meeting - April 3, 2025, 6PM

    c. Approval of Minutes - Regular Meeting - April 8, 2025 7:00 PM

    d. Receive EDA Commissioner Nyle LaGrange's Resignation

    e. Approval of Job Description of City Clerk

    f. Receive Resignation of Liquor Store Manager Janelle Satt

g. Approval of Resolution R-173-2025 approves the Fireworks Permit and Contract with Minnesota Pyrotechnics LLC for display of Fireworks/pyrotechnics Special Effects for Midsummer Days on June 20, 2025.

h. Receive City Attorney Report for March, 2025

i. Approval of LG220 application for exempt permit for Non-Profit lawful gambling for North Branch American Legion Riders Post 85.

j. Approval of hiring four new firefighters in the North Branch Fire Department

k. Approval of Resolution R-174-2025 Awarding 2025 Pavement Improvement Project Low Bid to Bituminous Roadways, Inc.

l. Approval of Resolution R-176-2025 Approving the Reduction of Letter of Credit for Luchts Crossing 4th Addition

m. Approval of Resolution R-179-2025 Releasing Developer Obligations as Stated in the Development Agreement for Luchts Crossing 3rd Addition

n. Moved to 9.e.

o. Approval of Resolution No. R-183-2025, Accepting the public improvements and Releasing Developer Obligations as Stated in the Site Agreement for Cliffs North Branch Acres

8. PUBLIC HEARINGS
    a. None
9. STAFF REPORTS
    a. Finance update – provided by Finance Director Sharon Wright
    b. Consider approval of Resolution #R-172-2025 accepting resignation and declaring a vacancy on the City Council. Motion by Member Goulet to approve the resolution, seconded by Canada, all aye, passed unanimously.
    c. Council deliberated upon the appointment of a new City Council member to fill the vacant position with a term ending on December 31,2026. Administrator Hill shared the Council's options of choosing from the former pool of applicants from the previous month or re-post the opening and accept new applicants.

Mayor asked Member Meacham if he had an opportunity to review the previous candidate interviews, which he did. Mayor asked the other members if they would like to choose from the existing pool of applicants, or start over. Goulet and Canada were comfortable going with the existing pool of applicants. Member Meacham discussed the applicants and appreciated the participation. Brought up the member that resigned from the Planning Commission a week after the election and commitment.

Member Meacham made a motion to approve Jim Ibinger as the Council member to fill the open seat ending Dec 31, 2026. Seconded by Canada. Mayor is excited for the future, appreciates the first and second. Goulet thanked the other two candidates, Paul and Phil, for applying. Paul specifically for running in the election. All aye. Passed unanimously.

d. Information provided by Nate Sondrol, Community Development Director, regarding the BDPI grant application and the corresponding resolution that will be coming at a later date when the information is completed and ready for council review. Grant will be used for Utility extension in the industrial park.

e. From Consent Agenda – Approval of Resolution #R-181-2025 releasing developer obligations as stated in the development agreement for Townsedge. Nate Sondrol pulled due to document modification, Exhibit A. Mayor states that developer has fulfilled their obligations and therefore he made a motion to approve the Resolution as presented, with the change to Exhibit A. Seconded by Canada, all aye, passed unanimously.

10. MAYOR/CITY COUNCIL

a. Mayor thanked Nyle LeGrange for his time on Commission. Thanked Janelle for time as Liquor Store. He welcomed the 4 new Firefighters. Welcomed Jim Ibinger, and thanked Peter Schaps for his time in Council and years on Water and Light Commission. Thanks to those involved with Fireworks process in getting City in a position for success in a safe plan. Meacham thanked Mayor

for request to the State bonding committee on the Interchange process. Thanks to Representative Rymer for supporting the bill.

11. ADJOURNMENT

    a. Motion by Mayor Schieber to adjourn the meeting at 8:08 PM, seconded by Member Canada, all aye.

_____

Kevin Schieber, Mayor

ATTEST:

_____

Matthew Hill, City Administrator

City of North Branch
Special Council Meeting 6:30pm
Minutes
April 29, 2025

1. **Call to Order**
   Mayor Schieber called the meeting to order at 6:30 pm

2. **Pledge of Allegiance**
   Mayor Schieber led the Pledge of Allegiance

3. Oath of Office - Jim Ibinger

4. **Roll Call**
   Council Members Goulet, Canada, Ibinger, Mayor Schieber.
   a. Oath of Office was taken by Jim Ibinger adding him to the Council Members present.

5. **Agenda Approval**
   a. Motion by Member Canada, seconded by Mayor Schieber, all aye, motion carried unanimously.

6. Presentations & Proclamations - none.

7. Public comment - None

8. Consent Agenda - Motion by Member Goulet, seconded by Canada, all aye, motion carried unanimously. Consent agenda contained the following:
   a. Approval of Resolution R-186-2025 Releasing Developer obligations as Stated in the development agreement for Townsedge 2nd Addition.
   b. Approval of temporary on-sale liquor license application for North Branch American Legion Post 85.
   c. Approval of Special Event Permit Application for North Branch American Legion Post 85 - Midsummer Days.

9. No Public Hearings

10. Staff Reports
    a. Consider approval of Resolution R-175-2025 to apply for a BDPI Grant. Nate Sondrol provides background - City has owned or controlled for 20 years, we need to have lots that are ready to go for the competitive nature of the area industrial properties.
       Goulet asked if the land sales would add to the total funding available for use. Nate - Yes.

Schieber asked about the term of the TIF funding. Nate - 8 years. Interfund loan use in interim. If TIF is allowed, it needs to happen to be as competitive as we can in getting industry to come to NB.
Schieber requests staff to look at the Initiative Foundation for additional funding.
Goulet says we need to be cautious with TIF, but this is the right time.
Ibinger asked what the timeframe for approval is? Nate - one month.
Motion by Member Goulet, seconded by Ibinger to approve the Resolution as presented, all aye, passed unanimously.

b. Comprehensive Plan Review roll-out. Administrator Hill provided a slide show of dates and steps for the review process.
Schieber brought up the Comp Plan and the MN Design Team information, to provide some background. Get it right, rather than fast.
Charlie Klopp, Commission/Chairperson of the Parks, Trails and Open Space Commission offered his feedback and welcomed everyone to attend the PTOS meeting on May 19 at Wildridge park and a bus tour of all City Parks.
Schieber asked if Churches would be included? brought up asking Katie Malchow from Chisago County to participate.

11. Mayor/Council reports
   a. Mayor brought up the Les Schwab grand opening, and the LMC annual conference.

12. Adjournment - Mayor Schieber made a motion to adjourn, seconded by Member Canada, all aye, passed unanimously.

_____
Kevin Schieber, Mayor

ATTEST:

_____
Matthew Hill, City Administrator

City of North Branch
Staff Report

Prepared By: Dan Meyer, Police Chief

Presenter: Dan Meyer, Police Chief

Date: 05/01/2025

Board & Commission: City Council

Subject: Approval of Temporary Road Closure During Midsummer Events

---

As we have requested in prior years, I am submitting a request to temporarily close Elm St. from 6th Ave. to 7th Ave. on Saturday, June 21, 2025 from 11:00 am - 5:00 pm for the Midsummer Kiddie Parade and other Midsummer activities taking place during that time. This temporary road closure is necessary for the events to take place and for the safety of the participants and the spectators.

Voting Requirements:

Voting Options	**Simple Majority**

City of North Branch
Staff Report

Prepared By: Kim Lindquist, Director, Community Planning & Econ. Dev, Nathan Sondrol, Community Development Director

Presenter: Nathan Sondrol, Community Development Director

Date: 05/01/2025

Board & Commission: City Council

Subject: Approval of Resolution R-188-2025 approving the Final Plat for Sherwood Pines

---

Recommended City Council Action

Motion to recommend the approval of the Resolution R-188-2025 approving the Final Plat for Sherwood Pines Subdivision at 41623 Flink Avenue in the Rural Residential (RR) zoning district subject to the following:

1. All fees and financial obligations shall be received by the City prior to releasing the approval documents related to this project for recording.
2. The Applicant will remove two accessory structure currently located on Lot 4 to bring the site into compliance with Rural Residential Accessory Structure standards.
3. The Applicant shall dedicate appropriate drainage and utility easements including those around wetlands.
4. The Applicant or the future owner of the lots shall obtain all necessary approvals, including submittal and approval of a site grading plan, and pay all applicable fees prior to commencing construction on the lots.
5. The Applicant shall pay the park dedication fee for three new lots prior to release of the Final Plat for recording. Future park dedications fees related to Outlot A will be required upon future development.
6. Lots 2 & 3 will share a common curbcut and driveway. The Applicant submit a shared driveway easement and maintenance agreement for staff review and approval prior to release of the final plat for filing.
7. The applicant will record against the title for all lots in the subdivision that the City, County and State will not install a sound wall along I-35.

Overview / Background

MaKe Properties LLC (Applicant) is requesting Preliminary Plat approval for a subdivision at 41623 Flink Ave. (Plat). The Applicant has applied to split the existing parcel, (PID: 11.00070.00) into four (4) lots and one outlot. The Plat will create four lots, one of which is developed with an existing home and the three new lots that would be available for future residential development. The outlot will remain as is until such time as public access is available to the site. The property currently is zoned Rural Residential and is not within the designated Urban Service Area.

Request(s) to Consider

1. Land Use and Zoning
2. Plat Standards

Analysis of Request(s)

1. Land Use & Zoning
The Subject Property currently has a single land use classification: **Rural Residential**. Similarly, the property is currently zoned **RR -Rural Residential**. The applicant is not requesting any change to the zoning and therefore the request is being analyzed based upon the RR Rural Residential ordinance standards. Single family development is a permitted use in the Rural Residential zoning district.
In the Comprehensive Plan and Zoning Map, the surrounding north, south, and west properties are designated Rural Residential and have single family uses. The western border of the site is Interstate Highway 35 – with the Outlot A acting as a buffer between the highway and the proposed residential area.

Land Use and Zoning standards are satisfied.

2. Plat Standards
Minimum Lot Standards
Minimum lot dimensional standards for properties in the RR zoning district are noted in the table below along with information about the proposed four lots and outlot:

Lot Standards

Type	Area (buildable acre)	Width	Depth
Minimum Lot Area	1	110’	300’
Lot 1	1.59	150’	473’
Lot 2	1.59	150’	473’
Lot 3	1.59	150’	473’
Lot 4	3.83	342’	473’
Outlot A	39.52	521’	1306’

The maximum building height in the Rural Residential zoning district is 35 feet and the maximum lot coverage for impervious surfaces is 50%. Both of these standards can easily be met due to the size of the proposed lots. The Plat illustrates the new lot configurations with the dimensions listed in the table above, all meeting the minimum lot ordinance requirements. The table below shows the required setbacks for the RR zoning district and the existing setbacks for the residence. The applicant has provided potential building pad sites on the lots 1, 2, and 3 which can meet the ordinance setback standards and provide an acceptable primary and secondary septic site.

Type	Front Yard (feet)	Rear Yard (feet)*	Side Yard (feet)*
Minimum Lot Setback	40’	30’	10’
Lot 1 Bldg Pad	56’	364’	47’
Lot 2 Bldg Pad	55’	365’	48’
Lot 3 Bldg Pad	54’	366’	37’
Lot 4	199’	202’	60’

Lot 4 is currently developed. The proposed lot also contains an accessory building, a barn, a small shed, and an outbuilding. The ordinance permits two accessory structures for properties zoned RR and between one-acre but less than five-acres. Staff is recommending the removal of two outbuildings, most likely the two smaller buildings, to bring the property into compliance. Section 66-898 of the North Branch City Code requires that all accessory buildings in the RR Districts meet the following setback requirements; Front Yard – 40 ft, Side Yard - 10 ft, and Rear Yard - 10 ft. The accessory building northwest of the barn is the closest accessory structure to a lot line at 13 feet – meeting the setback requirement. All other accessory structures meet the RR setbacks.

Wetlands

The Applicant has indicated there may be a wetland on site. However, the finalized Wetland Delineation determination has not been made due to the weather. A final determination is required, and provision of a drainage and utility easement over the wetland, in conjunction with submittal of the final plat.

Grading
The grading plan indicates where driveways will be placed. Grading will be required for the driveway work, including the shared driveway for Lots 2 & 3, the area immediately around proposed driveways, residences, and septic fields. Each lot will be individually graded upon development of each unit. The Applicant or the future builder, will be required to provide grading and erosion control plans and obtain all necessary permits, prior to building on either of the new lots which is a condition of approval.

Access
Flink is a major collector and the City tries to limit the amount of curbcuts along the road when possible. For this reason, staff had directed the applicant to provide a shared driveway for at least one of the lots. The applicant is recommending the residence keep the existing driveway with a new shared access for lots 2 & 3 and one driveway for Lot 4

Other
The City received a letter from MnDOT indicating their concerns about development in this location, as it relates noise and it's proximity to 1-35. They indicated they will not expend funds for noise mitigation measures in developed area. A condition of approval requires the applicant to record this information on each lot.

Staff Recommendation
City staff recommends approval of the Final Plat for Sherwood Pines with the conditions as stated.

Parks, Trails and Open Space Commission Recommendation

The Parks, Trails and Open Space Commission discussed the Sherwood Pines Preliminary Plat at the February 3, 2025 meeting and recommended the acceptance of cash in lieu of park dedication as the additional homes would place additional demands on the city's parks, trails and open space system.

Planning Commission Recommendation

The Planning Commission held a public hearing and took public testimony relating to the Sherwood Pines Preliminary Plat at the February 4, 2025, meeting and recommended approval based on findings of fact and conditions.

City Council Requested Action

Motion to recommend the approval of Resolution R-188-2025 approving the Final Plat for Sherwood Pines Subdivision at 41623 Flink Avenue in the Rural Residential (RR) zoning district subject to conditions.

Attachments

Final Plat

Voting Requirements:

Voting Options	**Simple Majority**

STATE OF MINNESOTA

COUNTY OF CHISAGO

CITY OF NORTH BRANCH

CITY COUNCIL RESOLUTION NO. R-188-2025

RESOLUTION APPROVING THE FINAL PLAT FOR SHERWOOD PINES SUBDIVISION

WHEREAS, MaKe Properties LLC ("Owner") requested Preliminary Plat approval for Sheroowd Pines Subdivision, collectively referred to hereafter as "Plat," located at 41623 Flink Ave (PID: 11.00070.00) ("Subject Property") and,

WHEREAS, the Subject Property is guided as Rural Residential, per the Comprehensive Plan ("Land Use"), and zoned as RR – Rural Residential ("Zoning"); and,

WHEREAS, the Owner is proposing to Plat the Subject Property, creating a total of four (4) residential lots – an increase of three (3) new residential lots for new development, and one outlot – on 39.52 gross acres of land ("Development"); and,

WHEREAS, pursuant to Minnesota Statute §462.357 the Planning Commission ("Commission") held a Public Hearing ("Hearing") on February 4, 2025, to consider and receive public comment regarding the proposed Plat; and,

WHEREAS, notice of the Hearing was posted, published in the City's official newspaper, and mailed to any and all owners of affected properties, as required by State Statute; and,

WHEREAS, during the public hearing there were several residents who spoke. They expressed concerns about the number of curbcuts along Flink Avenue, groundwater contamination from private well and septic, the number of lots and their size, and potential traffic impacts along Flink Avenue; and,

WHEREAS, following the Hearing, the Commission found the Plat satisfies all Land Use and Zoning standards and City platting requirements, and unanimously recommended approval of the Plat for Sherwood Pines preliminary plat; and,

WHEREAS, on February 25, 2025, the City Council passed Resolution No. R-153-2025, approving said preliminary plat; and,

WHEREAS, the final plat is consistent with the approved preliminary plat.

NOW THEREFORE BE IT RESOLVED, BY THE CITY COUNCIL OF THE CITY OF NORTH BRANCH, MINNESOTA, the Final Plat for Sherwood Pines is hereby approved based upon the following findings of fact:

1. The proposed development is consistent with the City's Comprehensive Plan and is compatible with the present and future land uses of the area.
2. The development is consistent with the City's Zoning Ordinance.
3. The physical characteristics of the site, including but not limited to topography, erosion, flooding potential, soil limitations, soil borings, are suitable for the type of development or use contemplated.
4. The development will not create an excessive burden on parks, schools, streets, and other public facilities and utilities, which serve or are proposed, to serve the area.

Subject to the following conditions:

1. All fees and financial obligations shall be received by the City prior to releasing the approval documents related to this project for recording.
2. The Applicant will remove two accessory structures currently located on Lot 4 to bring the site into compliance with Rural Residential Accessory Structure standards.
3. The Applicant shall dedicate appropriate drainage and utility easements including those around wetlands.
4. The Applicant or the future owner of the lots shall obtain all necessary approvals, including submittal and approval of a site grading plan, and pay all applicable fees prior to commencing construction on the lots.
5. The Applicant shall pay the park dedication fee for three new lots prior to release of the Final Plat for recording. Future park dedications fees related to Outlot A will be required upon future development.
6. Lots 2 & 3 will share a common curbcut and driveway. The Applicant shall submit a shared driveway easement and maintenance agreement for staff review and approval prior to release of the final plat for filing. \
7. The applicant will record against the title for all lots in the subdivision that the City, County and State will not install a sound wall along I-35 in the area.

BE IT FURTHER RESOLVED, the Final Plat shall not be released for recording until all fees and other financial obligations and agreements, if required, are executed and received by the city, recording of the Final Plat with the land records office of Chisago County must occur within 30 days of its release by the City to Owner.

Passed by the City Council of North Branch, Minnesota this 13h day of May, 2025.

_____

Kevin Schieber, Mayor

Attested:

_____

Matthew Hill, City Administrator

CITY OF NORTH BRANCH
CHISAGO COUNTY, MN

SHERWOOD PINES

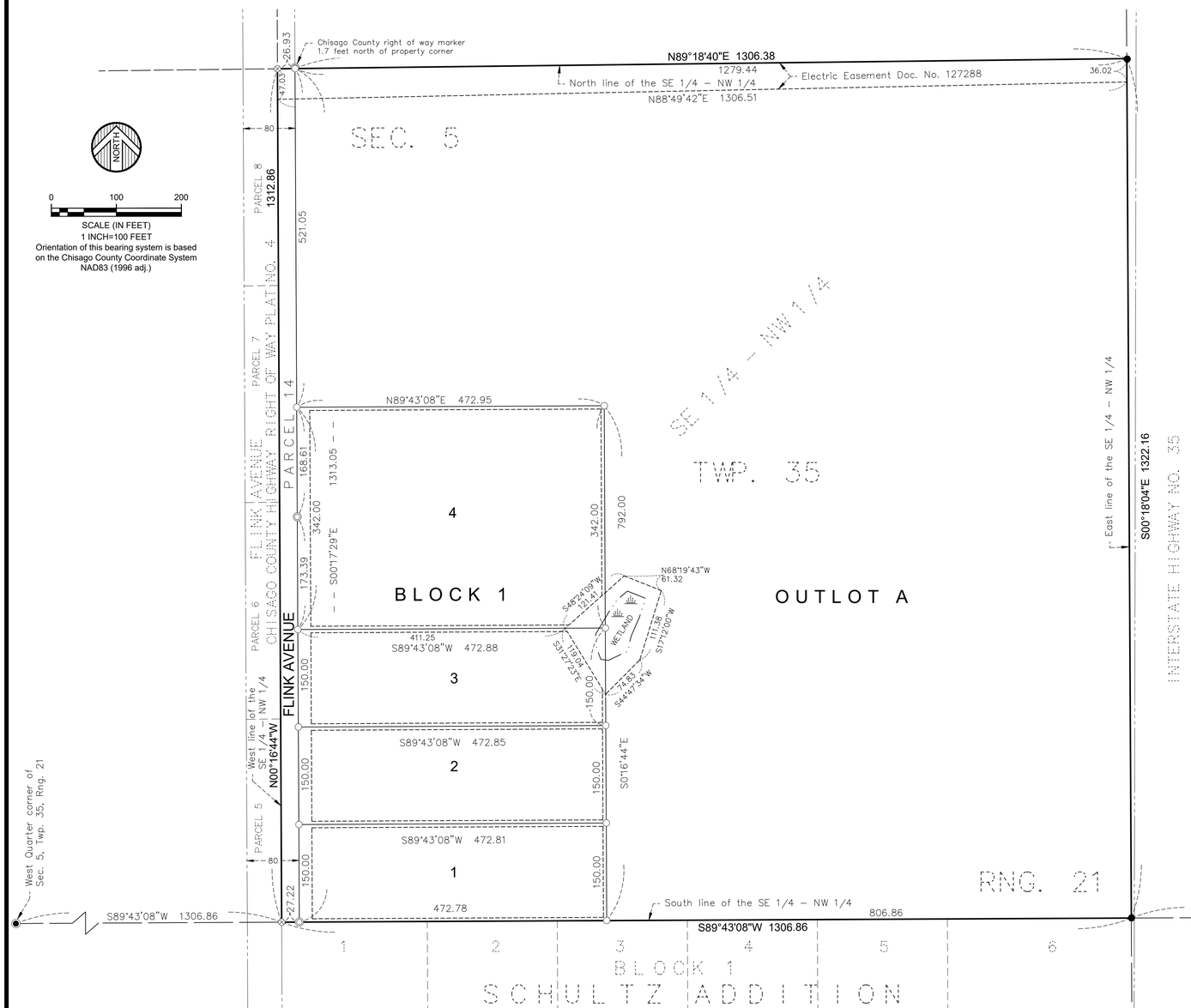

KNOW ALL PERSONS BY THESE PRESENTS: That MaKe Properties, LLC, owner and propreitor of the following described property situated in the County of Chisago, State of Minnesota, to wit:

The Southeast Quarter of the Northwest Quarter (SE 1/4 of NW 1/4) of Section Five (5), Township Thirty-five (35), Range Twenty-one (21), Chisago County, Minnesota.

Have caused the same to be surveyed and platted as SHERWOOD PINES, and do hereby donate and dedicate to the public for public use forever the public ways and also the easements as shown on this plat for drainage and utility purposes only.

In witness whereof said MaKe Properties, LLC, has caused these presents to be signed by its proper officer this _____ day of _____ , 20_____.

MaKe Properties, LLC

_____
Keith Koecher, President

STATE OF MINNESOTA
COUNTY OF _____

This foregoing instrument by Keith Koecher, President of MaKe Properties LLC, on behalf of the company, was acknowledged before me this _____ day of _____ , 20_____ .

_____

_____
Notary Public, Minnesota
My Commission Expires 1/31/20__

I hereby certify that I have surveyed and platted or directly supervised the surveying and platting of the land described on this plat; this plat is a correct representation of the boundary survey; all mathematical data and labels are correctly designated on the plat; all monuments depicted on the plat have been or will be correctly set within one year; all water boundaries and wet land as of this date are shown and labeled; and all public ways are shown and labeled.

_____
Kelly L. Jordan, Land Surveyor
Minnesota Licensed No. 42648

STATE OF MINNESOTA
COUNTY OF CHISAGO

This foregoing Surveyor's Certificate by Kelly L. Jordan, Minnesota License No. 42648, was acknowledged before me, this _____ day of _____, 20_____.

_____

_____
Notary Public, Minnesota
My Commission Expires 1/31/20__

Approved by the City Council of the City of North Branch, Minnesota, this _____ day of _____ , 20 ___ , and is in compliance with the provisions of Chapter 505.03, Subdivision 2, Minnesota Statutes.

Signed _____ Signed _____
Mayor Clerk

Pursuant to Chisago County Subdivision Ordinance Number 99-2, I hereby certify that this plat has been checked and approved as to compliance with Chapter 505.021, Minnesota Statutes this _____ day of _____ , 20 ___ .

_____
Chisago County Surveyor

No delinquent taxes and transfer entered this _____ day of _____ , 20___ .

_____
Chisago County Auditor

I hereby certify that the taxes for the year 20 ___ on the property described herein are paid this _____ day of _____ , 20 ___ .

_____
Chisago County Treasurer

Document No. _____

I hereby certify that this instrument was filed in the Office of the County Recorder for record on this _____ day of _____ , 20 ___ , at ____ o'clock ___ .M., and was duly recorded in the Chisago County Records.

_____
Chisago County Recorder

DRAINAGE AND UTILITY EASEMENTS ARE SHOWN THUS:

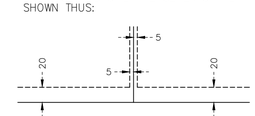

BEING 20 FEET IN WIDTH ADJOINING STREET LINES AND 5 FEET IN WIDTH ADJOINING LOT LINES, UNLESS OTHERWISE SHOWN ON THIS PLAT.

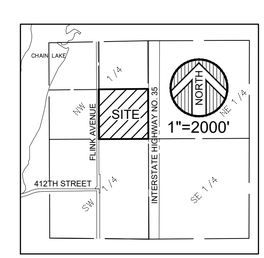

VICINITY MAP
SEC. 5, T35, R.21
NORTH BRANCH
CHISAGO COUNTY, MINNESOTA

- DENOTES A CHISAGO COUNTY MONUMENT
- DENOTES A CHISAGO COUNTY RIGHT OF WAY MONUMENT
- DENOTES A FOUND 1/2" IRON PIPE MONUMENT CAP NO 6260 UNLESS NOTED OTHERWISE
- DENOTES A SET 1/2" IRON PIPE MONUMENT CAP NO 42648
- DENOTES A SET MAGNETIC NAIL W/WASHER INSCRIBED 42648
- WETLAND SYMBOL
- DENOTES WETLAND DELINEATED BY EARTH SCIENCE ASSOCIATES INC. DATED 01/03/2025

WIDSETH
ARCHITECTS ▪ ENGINEERS ▪ SCIENTISTS ▪ SURVEYORS

GRADING PLAN
OF
SHERWOOD PINES

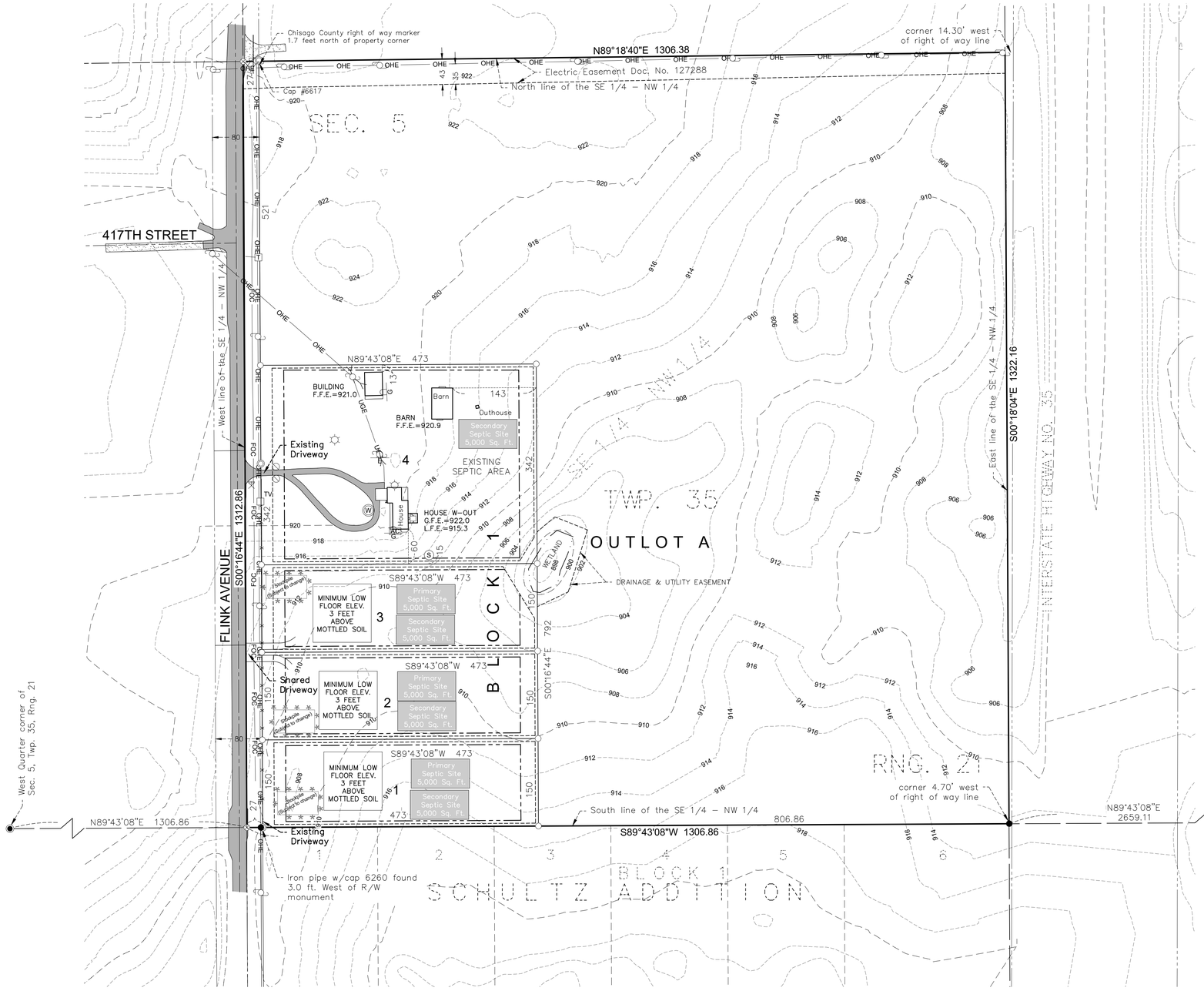

SURVEY NOTES

1. The bearing system is based on the Chisago County coordinate system, NAVD83 (1996 Adjust).
2. Existing contours shown are from the MN DNR on NAVD88.
3. Rock entrances shall be installed at the start of grading. 1 1/2 -2 inch washed rock shall be used. Drive must be at least 35 feet in length, and as wide as required by the operations of the project. Replace rock as needed to maintain a 6 inch depth. A geotextile fabric may be used under the rock to prevent the migration of the underlying soil into the rock.
4. Soil stockpiles must not be placed near waterbodies or on streets.
5. Streets must be cleared of all debris at the end of each day or as directed by the City, to remove all accumulated materials. Failure to perform any street sweeping within six hours of notice by the City will result in the work being performed Engineering Design Standards for Stormwater Management by the City and all associated costs billed. The City also requires removal of accumulated materials on streets during winter.
6. Permanent seeding recommended. MnDOT 25-131 Low Maintenance Turf Mix, 220lb/acre. Fertilizer Type 3 @ 350 lbs/acre. Seeding and restoration to be completed within 48 hours of final grading.
7. **NOTE: The building pads, stockpiles and driveway locations are shown for graphic purposes only. The final grades and floor elevations are subject to soil borings and approval by the owner, builder, and local governing body, at the time of permitting. The floor elevations shown are based on a minimum low floor elevation 3 feet above existing grade. It is the responsibility of the builder to comply with State laws and local ordinances regarding construction site erosion and sediment control.**

OWNER & DEVELOPER
MaKe PROPERTIES LLC
21542 SHALLOW LAKE RD
WARBA, MN 55793
(651) 226-4039

ENGINEER/LAND SURVEYOR
WIDSETH
5368 266TH STREET
WYOMING, MN 55092
PHONE (651) 464-3130

SOIL TESTER
JOSH PUTT LIC #L4063
PO BOX 45
SHAFER, MN 55074
651-900-1567
TEST DATE: 11-18-2024

PROPERTY DESCRIPTION:
Affidavit of Identity and Survivorship Doc. No. A601756
The Southeast Quarter of the Northwest Quarter (SE 1/4 of NW 1/4) of Section Five (5), Township Thirty-five (35), Range Twenty-one (21), Chisago County, Minnesota.

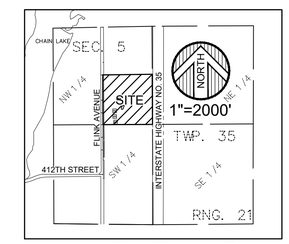

VICINITY MAP
SEC. 5, T35, R.21
CITY OF NORTH BRANCH
CHISAGO COUNTY, MINNESOTA

FLOODPLAIN NOTES: FLOOD INSURANCE RATE MAP (FIRM)

COMMUNITY No.	PANEL No.	SUFFIX	DATE OF FIRM INDEX	FIRM ZONE
27025	0165	D	04/17/2024	X

NORTH

0 100 200
SCALE (IN FEET)

LEGEND

- DENOTES A CHISAGO COUNTY RIGHT OF WAY MONUMENT
- DENOTES A FOUND 1/2" IRON PIPE MONUMENT CAP NO 6260 UNLESS NOTED OTHERWISE
- DENOTES A SET 1/2" IRON PIPE MONUMENT CAP NO 42648
- DENOTES A SET MAGNETIC NAIL W/WASHER INSCRIBED 42648
- POWER POLE
- TELE PEDESTAL
- GUY ANCHOR
- EXISTING WELL
- FENCE POST
- MAIL BOX
- AC UNIT
- SEPTIC COVER
- ELECTRIC LIGHT POLE
- ELECTRIC METER
- GAS METER
- TV PEDESTAL
- BUILDING SETBACK LINE
- BITUMINOUS SURFACE
- GRAVEL SURFACE
- OHE — OVERHEAD ELECTRIC
- UGE — UNDERGROUND ELECTRIC
- FOC — FIBER OPTIC CABLE
- DENOTES WETLAND DELINEATED BY EARTH SCIENCE ASSOCIATES INC. DATED 01/03/2025

DRAINAGE AND UTILITY EASEMENTS ARE SHOWN THUS:

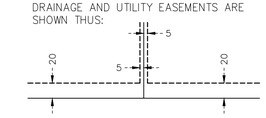

BEING 20 FEET IN WIDTH ADJOINING STREET LINES AND 5 FEET IN WIDTH ADJOINING LOT LINES, UNLESS OTHERWISE SHOWN ON THIS PLAT.

© 2025 WIDSETH SMITH NOLTING & ASSOCIATES, INC.

DATE:	December 2024
SCALE:	AS SHOWN
DRAWN BY:	JMM
CHECKED BY:	KLJ
FILE NUMBER:	2024-11929

DATE	AMENDMENTS	BY
01/08/2025	Added wetland data to drawing	JAS

PREPARED FOR: **MaKe PROPERTIES LLC**

I HEREBY CERTIFY THAT THIS SURVEY, PLAN, OR REPORT WAS PREPARED BY ME OR UNDER MY DIRECT SUPERVISION AND THAT I AM A DULY LICENSED LAND SURVEYOR UNDER THE LAWS OF THE STATE OF MINNESOTA.

Kelly L. Jordan DATE: 12/23/2024 LIC. NO. 42648

WIDSETH
ARCHITECTS ▪ ENGINEERS ▪ SCIENTISTS ▪ SURVEYORS

CITY OF NORTH BRANCH
CHISAGO COUNTY, MN

PRELIMINARY PLAT

SHERWOOD PINES

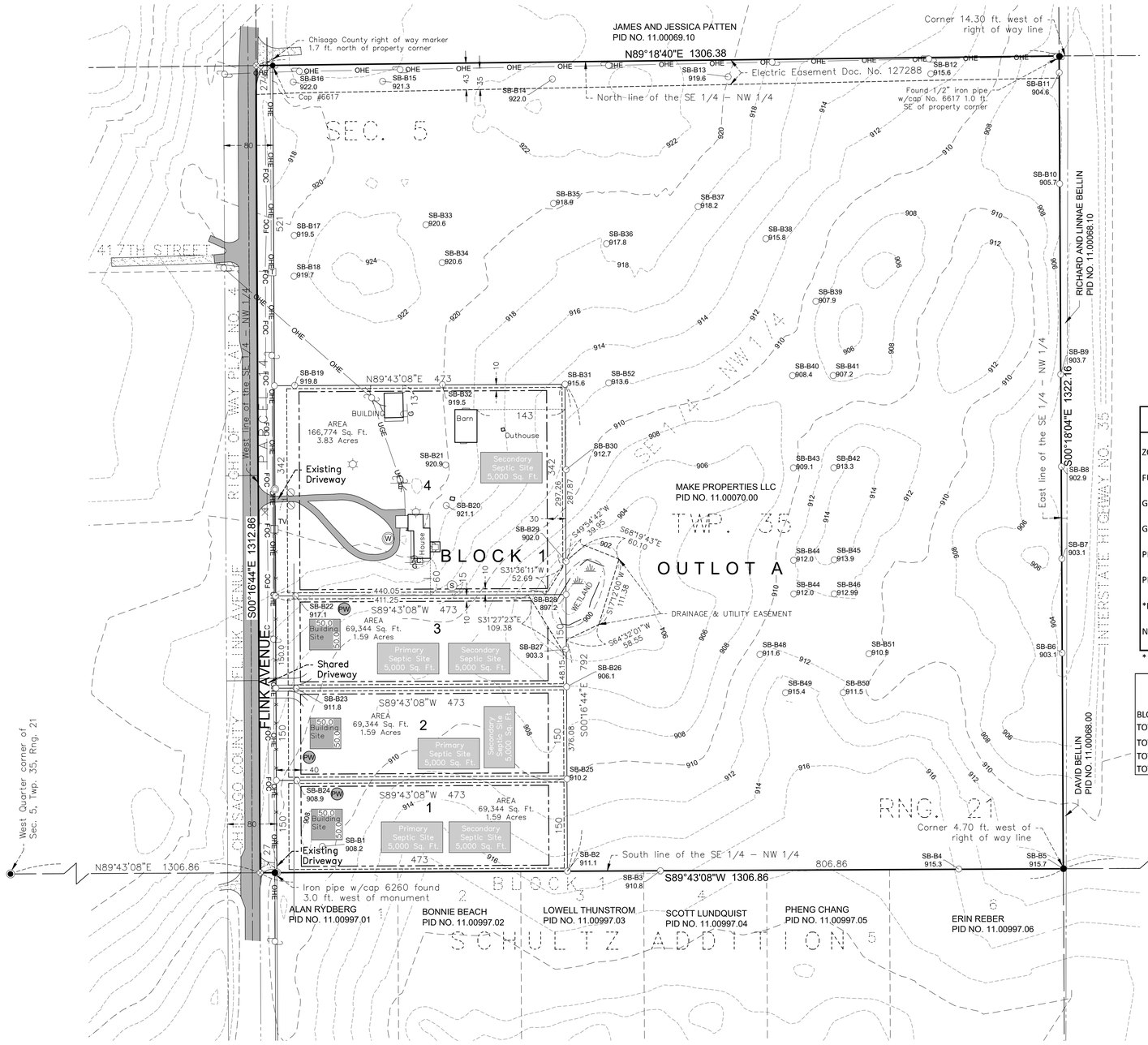

PROPERTY DESCRIPTION:

Title Commitment: Stewart Title Guaranty Company, Dated October 29, 2024, Office File No. 2024-233195
The Southeast Quarter of the Northwest Quarter (SE 1/4 of NW 1/4) of Section Five (5), Township Thirty-five (35), Range Twenty-one (21), Chisago County, Minnesota.

SURVEY NOTES:

1. Orientation of this bearing system is based on the Chisago County Coordinate System NAD83 (1996 adj.)
2. Vertical Control: MNDOT "HARRIS MNDT AZ MK" Elev.=921.55 NAVD88.
3. The address of the property is 41623 Flink Ave., North Branch, MN 55056. PID No. 11.00070.00
4. The total acreage of the property is 1,721,458 Sq. Ft. or 39.52 Acres.
5. Contours shown are LiDAR contours from MN DNR on NAVD88 datum
6. Building pads, driveways, septic areas, and wells are approximate only.

DEVELOPMENT REGULATIONS	
SINGLE FAMILY LOTS	
FRONT SETBACK	40 FT.
REAR SETBACK	30 FT.
SIDE SETBACK (INTERIOR)	10 FT
SIDE SETBACK (CORNER)	30 FT.
MINIMUM WIDTH	110 FT.
MINIMUM DEPTH	300 FT.
WETLAND	40 FT.
WETLAND BUFFER	20 FT.
LOWEST FLOOR ABOVE HIGHEST KNOWN GROUNDWATER LEVEL	3 FT.
LOWEST FLOOR ELEVATION ABOVE 100-YEAR FLOOD ELEVATION	2 FT.

SITE DATA

ZONING: RURAL RESIDENTIAL

FUTURE LAND USE: SINGLE FAMILY RESIDENTIAL

GROSS AREA: 1,721,458 SQ. FT. / 39.52 AC.

GROSS SITE DENSITY: 4/39.52 = 0.10 DUA

PROPOSED ROW: 35,924 SQ. FT./ 0.82 AC.

PROPOSED NEW EASEMENTS: 49,567 SQ. FT. / 1.14 AC.

*NET AREA: 1,636,540 SQ. FT. / 37.57 AC.

NET SITE DENSITY: 4/8.60 AC. = 0.47 DUA

* GROSS AREA - EASEMENTS - ROW

AREA SUMMARY		
BLOCK 1 =	374,510 SF.	8.60 AC.
TOTAL LOT AREA =	374,510 SF.	8.60 AC.
TOTAL OUTLOT AREA=	1,311,397 SF.	30.11 AC.
TOTAL R/W AREA=	35,924 SF.	0.82 AC.
TOTAL AREA=	1,721,831 SQ. FT.	39.52 AC.

WETLAND DELINEATOR

EARTH SCIENCE ASSOCIATES INC.
37445 GRAND AVENUE
NORTH BRANCH, MN 55056
(612) 718-0413
DATE: 01/03/2025

OWNER & DEVELOPER

MaKe PROPERTIES LLC
21542 SHALLOW LAKE RD
WARBA, MN 55793
(651) 226-4039

ENGINEER/LAND SURVEYOR

WIDSETH
5368 266TH STREET
WYOMING, MN 55092
PHONE (651) 464-3130

SOIL TESTER

JOSH PUTT LIC #L4063
PO BOX 45
SHAFER, MN 55074
651-900-1567
TEST DATE: 11-18-2024

SOIL BORING	ELEVATION AT MOTTLED SOIL
SOIL BORING 1	907.0
SOIL BORING 2	910.0
SOIL BORING 3	909.6
SOIL BORING 4	914.2
SOIL BORING 5	914.6
SOIL BORING 6	901.4
SOIL BORING 7	901.4
SOIL BORING 8	NA
SOIL BORING 9	902.1
SOIL BORING 10	903.7
SOIL BORING 11	903.4
SOIL BORING 12	NA
SOIL BORING 13	918.1
SOIL BORING 14	920.8
SOIL BORING 15	NA
SOIL BORING 16	NA
SOIL BORING 17	NA
SOIL BORING 18	NA
SOIL BORING 19	918.4
SOIL BORING 20	NA
SOIL BORING 21	919.7
SOIL BORING 22	915.9
SOIL BORING 23	910.7
SOIL BORING 24	907.8
SOIL BORING 25	908.8
SOIL BORING 26	NA

SOIL BORING	ELEVATION AT MOTTLED SOIL
SOIL BORING 27	902.2
SOIL BORING 28	896.2
SOIL BORING 29	900.9
SOIL BORING 30	NA
SOIL BORING 31	NA
SOIL BORING 32	NA
SOIL BORING 33	NA
SOIL BORING 34	919.5
SOIL BORING 35	NA
SOIL BORING 36	NA
SOIL BORING 37	917.0
SOIL BORING 38	NA
SOIL BORING 39	NA
SOIL BORING 40	NA
SOIL BORING 41	NA
SOIL BORING 42	912.0
SOIL BORING 43	907.6
SOIL BORING 44	NA
SOIL BORING 45	NA
SOIL BORING 46	NA
SOIL BORING 47	910.9
SOIL BORING 48	NA
SOIL BORING 49	NA
SOIL BORING 50	NA
SOIL BORING 51	NA
SOIL BORING 52	NA

*NA = MOTTLED SOIL NOT FOUND

FLOODPLAIN NOTES: FLOOD INSURANCE RATE MAP (FIRM)

COMMUNITY No.	PANEL No.	SUFFIX	DATE OF FIRM INDEX	FIRM ZONE
27025	0165	D	04/17/2024	X

LEGEND

- DENOTES A CHISAGO COUNTY RIGHT OF WAY MONUMENT
- DENOTES A FOUND 1/2" IRON PIPE MONUMENT CAP NO 6260 UNLESS NOTED OTHERWISE
- DENOTES A SET 1/2" IRON PIPE MONUMENT CAP NO 42648
- DENOTES A SET MAGNETIC NAIL W/WASHER INSCRIBED 42648
- POWER POLE
- TELE PEDESTAL
- GUY ANCHOR
- EXISTING WELL
- FENCE POST
- MAIL BOX
- AC UNIT
- SEPTIC COVER
- ELECTRIC LIGHT POLE
- ELECTRIC METER
- GAS METER
- TV PEDESTAL
- SOIL BORING
- PROPOSED WELL
- BUILDING SETBACK LINE
- BITUMINOUS SURFACE
- GRAVEL SURFACE
- OVERHEAD ELECTRIC
- UNDERGROUND ELECTRIC
- FIBER OPTIC CABLE
- BARBED WIRE FENCE
- WOOD FENCE
- SINGLE CHAIN FENCE
- WOOD LINE
- DENOTES WETLAND DELINEATED BY EARTH SCIENCE ASSOCIATES INC. DATED 01/03/2025

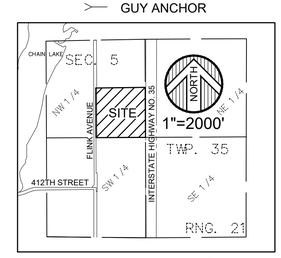

VICINITY MAP
SEC. 5, T35, R.21
CITY OF NORTH BRANCH
CHISAGO COUNTY, MINNESOTA

DRAINAGE AND UTILITY EASEMENTS ARE SHOWN THUS:

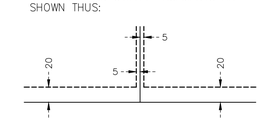

BEING 20 FEET IN WIDTH ADJOINING STREET LINES AND 5 FEET IN WIDTH ADJOINING LOT LINES, UNLESS OTHERWISE SHOWN ON THIS PLAT.

© 2025 WIDSETH SMITH NOLTING & ASSOCIATES, INC.

DATE:	December 2024
SCALE:	AS SHOWN
DRAWN BY:	JMM
CHECKED BY:	KLJ
FILE NUMBER:	2024-11929

DATE	AMENDMENTS	BY
01/08/2025	Added wetland data to drawing	JAS

PREPARED FOR: **MaKe PROPERTIES LLC**

I HEREBY CERTIFY THAT THIS SURVEY, PLAN, OR REPORT WAS PREPARED BY ME OR UNDER MY DIRECT SUPERVISION AND THAT I AM A DULY LICENSED LAND SURVEYOR UNDER THE LAWS OF THE STATE OF MINNESOTA.

Kelly L. Jordan DATE: 12/23/2024 LIC. NO. 42648

WIDSETH
ARCHITECTS ▪ ENGINEERS ▪ SCIENTISTS ▪ SURVEYORS

City of North Branch
Staff Report

Prepared By: Travis Miles, Human Resources Generalist

Presenter: Travis Miles, Human Resources Generalist

Date: 05/05/2025

Board & Commission: City Council

Subject: Approval of hiring City Clerk

Overview/Background

The City Clerk position was vacated in October 2024. During a Special City Council meeting on October 28, Council approved a temporary assignment for a Deputy clerk which started November 1st, 2024 via an MOU with the Teamster's Union. On January 1, 2025, the Deputy Clerk resigned from the temporary assignment. After the Deputy Clerk position was vacated, the City Clerk position was approved for posting and hiring. Twenty applications were received and scored by the hiring committee, who included Matthew Hill, City Administrator, Travis Miles, HR Generalist, Dan Meyer, Chief of Police, Nate Sondrol, Community Development Director, and Christina Vollrath, Chisago County Clerk of the Board, using a points-based matrix. Based on the interviews, the hiring committee recommended hiring Tonya Kostuch. A background check has been successfully completed.

Please note that Tonya's start date will be June 2, 2025.

Requested Action

Recommend a motion and a second to approve the hiring of Tonya Kostuch to the city clerk position.

Voting Requirements:

Voting Options **Simple Majority**

FLAHERTY | HOOD P.A.

MEMORANDUM

To: The Honorable Kevin Schieber
City of North Branch City Council

VIA EMAIL ONLY

cc: Matthew Hill, City Administrator

From: Christopher M. Hood

Date: May 5, 2025

Re: Legal Staff Report for May 13, 2025 City Council Meeting

- -

We are submitting this memorandum to update the City of North Branch City Council on the work we performed as City Attorney during April 2025. The matters listed below are discussed in a general manner only for sake of brevity and to maintain any attorney-client privileged and/or confidential information/data.

Summary of City Matters

1. Municipal Matters
   Attorneys researched, reviewed, analyzed, and advised on questions related to a Council vacancy and community development questions.

2. Land Use and Real Estate Matters
   Attorneys researched, reviewed, advised and drafted documents related to several real estate transactions including drafting a purchase agreement, deeds and resolution, and reviewing and advsing on cloding process and documents.

3. Staff Communications
   Attorneys also make occasional day-to-day communications with the City Administrator, City Engineer and City staff regarding the above-referenced matters, among others.

CMH/sc

City of North Branch
Staff Report

Prepared By: Travis Miles, Human Resources Generalist

Presenter: Travis Miles, Human Resources Generalist

Date: 05/05/2025

Board & Commission: City Council

Subject: Approval of hiring Public Works Maintenance 1

Overview/Background

A Public Works Maintenance applicant rescinded an offer that was made, resulting in an open position for Public Works Maintenance that was previously approved. The position was re-posted and 14 applications were received. The applicants were scored by the hiring committee, who included Matthew Hill, City Administrator, Travis Miles, HR Generalist, Shawn Williams, Director of Public Works and Utilities Director, Brady Sterbentz, Foreman, and Angela Tveit, Public Works Office Manager. Five of the applicants were invited in for interviews which were conducted by Mr. Miles, Mr. Williams, Mr. Sterbentz, and Ms. Tveit. The interview team recommended hiring Carter Ramaley.

Requested Action

Recommend a motion and a second to approve the hiring of Carter Ramaley for the Public Works Maintenance position.

Voting Requirements:

Voting Options **Simple Majority**

City of North Branch
Staff Report

Prepared By: Matthew Hill, City Administrator

Presenter: Matthew Hill, City Administrator

Date: 05/06/2025

Board & Commission: City Council

Subject: Approval of 30 day Transient Merchant License Group Sale for Custom Remodelers Inc.

Background:
Custom Remodelers Inc. have completed an application for a 30-day Transient Merchant License Group Sale. Background checks on the users have been completed. Payment has been received. Group members are as follows:
Ray Trowbridge
Hassan Alhasnawi
Josiah Moteberg
Tyler Janckila
Dante Dockery
Naseem Burnham

Recommended Action:
Motion and second to approve the application for a 30-day Transient merchant License Group Sale for Custom Remodelers Inc.

Voting Requirements:

Voting Options **Simple Majority**

CITY OF NORTH BRANCH
Application for Transient Merchant License
Group Sale

SECTION 1 - INFORMATION ON SPONSOR, PROMOTER OR ORGANIZER

APPLICANT'S FULL LEGAL NAME (LAST, FIRST, MIDDLE)
Burnham Naseem James

APPLICANT'S ADDRESS (STREET ADDRESS, CITY, STATE, ZIP)
1697 Fry St Falcon Heights MN 55113

APPLICANT'S PHONE NUMBER	APPLICANT'S DRIVER'S LICENSE NUMBER
651 324843	T630283875409
APPLICANT'S DATE OF BIRTH	**APPLICANT'S SOCIAL SECURITY NUMBER**
08/14/1997	

HAS APPLICANT EVER BEEN CONVICTED OF A VIOLATION OF ANY FEDERAL STATE OR CITY ORDINANCES OR LAWS? _____ YES
_X_ NO
IF SO LIST NATURE OF VIOLATION, DATE OF CONVICTION, AND NAME OF JURISDICTION INVOLVED.

SECTION 2 - INFORMATION ON COMPANY

COMPANY NAME (PERSON, FIRM, ASSOCIATION OR CORPORATION WHOSE MERCHANDISE IS BEING SOLD)
Custom Remodeling inc

COMPANY ADDRESS (STREET ADDRESS, CITY, STATE, ZIP) A PO BOX NUMBER IS NOT AN ACCEPTABLE ADDRESS
474 Apollo Dr Lino Lakes MN 55014

COMPANY PHONE NUMBER	MINNESOTA ID NUMBER	FEDERAL ID NUMBER
651 784 2646	1042678	41-1676412

SECTION 3 - INFORMATION ON GOODS TO BE OFFERED

DESCRIPTION OF GOODS, WARES, MERCHANDISE, OR SERVICES BEING OFFERED BY TRANSIENT MERCHANTS
exterior remodeling estimates, windows, siding, roofing, doors

DATES GOODS ARE BEING OFFERED	AREA WHERE GOODS ARE BEING OFFERED
	Whole city

SECTION 4 - INFORMATION ON TRANSIENT MERCHANTS

NAME AND ADDRESS OF ALL TRANSIENT MERCHANTS PARTICIPATING IN GROUP SALE. ATTACH A SEPARATE SHEET IF MORE SPACE IS NEEDED *****NOTE BACKGROUND CONSENT FORM MUST BE COMPLETED BY EACH TRANSIENT MERCHANT.***

Group Transient Merchant License Applicants

Notice to all License Applicants:

Attached is:

- The North Branch City Code on Peddlers, Solicitors and Transient Merchants.
- Transient Merchant License Application

There are two group license options:
30-day license. The license fee is $260 or
3-day license. The license fee is $130.

The North Branch Police Department will conduct a background investigation on all participants. A background authorization form must be completed by each participant.

License applications must be approved by the North Branch City Council before you can begin going door-to-door. You must be in possession of the approved licensed signed by the City prior to going door-to-door. G

LICENSE APPLICANT:

Pursuant to Minnesota Statute 270.72 Tax Clearance: Issuance of Licenses, the licensing authority is required to provide to the Minnesota Commissioner of Revenue your Minnesota business tax identification number and the social security number of each license applicant.

Under the Minnesota Government Data Practices Act and the Federal Privacy Act of 1974, we are required to advise you of the following regarding the use of this information:

1. This information may be used to deny the issuance, renewal or transfer of your license in the event you owe the Minnesota Department of Revenue delinquent taxes, penalties or interest;
2. Upon receiving this information, the licensing authority will supply it only to the Minnesota Department of Revenue upon their request. However, under the Federal Exchange of Information Agreement the Department of Revenue may supply this information to the Internal Revenue Service;
3. Failure to supply this information may jeopardize or delay the processing of your licensing issuance or renewal application.

Please supply the following information and return along with your application to the agency issuing the license. **DO NOT RETURN TO THE DEPARTMENT OF REVENUE.**

LICENSE BEING APPLIED FOR OR RENEWED: Peddler/Solicitor

LICENSING AUTHORITY: City of North Branch, Chisago County, Minnesota

LICENSE RENEWAL DATE: 04/29/2025

PERSONAL INFORMATION (If applicable):

Applicant's Name Joseph Burnham

Applicant's Address _____
City State Zip

Social Security Number: _____

BUSINESS INFORMATION (If applicable):

Business Name Custom Remodelers Inc

Business Address 4224 Apollo Dr Lino Lakes MN 55014
City State Zip

MINNESOTA TAX IDENTIFICATION NO: 1042678

FEDERAL TAX IDENTIFICATION NO: 41-1676402

If a Minnesota Tax Identification number is not required, please explain on the reverse side.

Signature	Position (Officer, Partner, etc.)	Date
[signature]	Canvas Manager	04/29/2025

I certify that the information given herein is true and complete to the best of my knowledge. I authorize the City of North Branch to do a criminal background investigation as may be necessary in issuance of a Transient Merchant License.

SIGNATURE OF APPLICANT

04/29/2025
DATE

FOR OFFICE USE ONLY

BACKGROUND CHECK COMPLETED BY CB

DATE OF INVESTIGATION 4/30/25

RECOMMEND ☒ APPROVAL OR ☐ DENIAL

☐ APPROVED OR ☐ DENIED BY CITY COUNCIL

DATE OF COUNCIL ACTION 5/13/25

City of North Branch
Staff Report

Prepared By: Nathan Sondrol, Community Development Director

Presenter: Nathan Sondrol, Community Development Director

Date: 05/07/2025

Board & Commission: City Council

Subject: Approval of Resolution R-191-2025 to apply for a BDPI Grant

---

Background Info

The City of North Branch has over 200 acres of vacant land currently available in the Interstate Business Park that is being marketed for sale. The land consists of predominately industrial-zoned properties along with some commercial land on the south end of the park and some residential on the south side of 400th Street. The land has been owned by the North Branch EDA and Chisago County HRA/EDA dating back to the mid 2000's.

The Interstate Business Park has good visibility and access bounded by I35 to the west, 400th St to the south, Co Rd 30 along with rail to the east and 410th Street to the north. However, there are currently a limited number of sites that are immediately available that do not require the additional cost and time to extend streets and utilities in the industrial park. The EDA has been working on addressing this through rezoning of properties and reevaluating the design standards guidelines. The EDA has received interest from prospective manufacturing companies looking to invest in Interstate Business Park and the EDA has discussed applying for a Business Development Public Infrastructure (BDPI) grant to extend street and utility infrastructure within the park.

The proposed street and utility infrastructure improvements would include the extension of Fletcher Ave to approximately 805' to the north and Goodview Ave 920' to the north. See the attached map. The total project cost is estimated at $2,408,005. Funding for these improvements will consist of funds BDPI grant funding, EDA Façade, TIF, Fund 503 closeout and Land Sales.

Attached are cost estimates for the street and utility infrastructure improvements.

Grant Information:

TheBusiness Development Public Infrastructure (BDPI) program through the Minnesota Department of Employment and Economic Development (DEED) focuses on job creation and retention through the growth of new innovative businesses and organizations. The program provides grants to local governmental units on a competitive basis statewide for up to 50 percent of the capital cost of the public infrastructure necessary to expand or retain jobs.

Eligibility

· Local governmental units (city, county, townships, special district, or other political subdivision or public corporation) are eligible to apply for a grant.
· The minimum requirement applies to cities, which must provide a 50-percent match of the project capital costs.
· The projects must be of publicly owned infrastructure related to a development project, including projects that target manufacturing, technology, warehousing and distribution; research and development; innovative business incubator; agricultural processing; or industrial, office, or research park development that would be used by an innovative business. · Funds from this program can also be used for land acquisition and preparation, telecommunications, bridges, parking ramps, demolition, hazard remediation, pre-design, construction, equipment and furnishings.

The City Council approved resolution R-175-2025 on April 29, 2025, authorizing the Mayor and City Administrator to submit a BDPI application. In review of the application. The application required specific language that was not included on the prior resolution and has been included on this resolution.

Requested Action

To approve Resolution R-191-2025 authorizing the mayor and city administrator to apply for the Business Development Public Infrastructure (BDPI) grant.

Voting Requirements:

Voting Options **Simple Majority**

STATE OF MINNESOTA

COUNTY OF CHISAGO

CITY OF NORTH BRANCH

CITY COUNCIL RESOLUTION NO. R-191-2025

A RESOLUTION AUTHORIZING THE BUSINESS DEVELOPMENT INFRASTRUCTURE GRANT APPLICATION FOR THE CITY OF NORTH BRANCH, MINNESOTA INTERSTATE BUSINESS PARK

WHEREAS, the City of North Branch has identified the need for the extension of public infrastructure to the Interstate Business Park to promote future development: and

WHEREAS, the City has limited industrial property available for the attraction and expansion of existing businesses in the community; and

WHEREAS, the City has identified the Business Development Infrastructure Grant Program as a potential funding source to complete the proposed project; and

WHEREAS, the City of North Branch's comprehensive water and sanitary sewer plans call for the installation of trunk water and sewer lines to serve the proposed project area; and

WHEREAS, the City has completed the preliminary engineering for the proposed Infrastructure Project and identified the cost associated with the proposed project; and

WHEREAS, the City has identified the funding sources to meet the required match requirements of the Business Development Infrastructure Grant Program.

BE IT RESOLVED that the City of North Branch act as the legal sponsor for project(s) contained in the Business Development Infrastructure Application to be submitted on May 13, 2025 and that the Mayor and City Administrator are hereby authorized to apply to the Department of Employment and Economic Development for funding of this project on behalf of the City of North Branch

BE IT FURTHER RESOLVED that the City of North Branch has the legal authority to apply for financial assistance, and the institutional, managerial, and financial capability to ensure matching funds, adequate construction, operation, maintenance and replacement of the proposed project for its design life.

BE IT FURTHER RESOLVED that the City of North Branch has not violated any Federal, State, or local laws pertaining to fraud, bribery, kickbacks, collusion, conflict of interest or other unlawful or corrupt practice.

BE IT FURTHER RESOLVED that upon approval of its application by the state, the City of

North Branch, may enter into an agreement with the State of Minnesota for the above-referenced project(s), and that it will comply with all applicable laws and regulations as stated in all contract agreements.

BE IT FURTHER RESOLVED that the non-BDPI source(s) of funds identified in the sources and uses outline in the application in the total amount of $1,184,609 are committed and adequate to fully fund the project identified in the application. -
-
BE IT FURTHER RESOLVED that the sources of the Applicant's matching funds shall be the city enterprise fund which has adequate funding to cover the commitment.

BE IT FURTHER RESOLVED that per MN statute 116J.431 Subd 7, the City of North Branch understands the grant may be cancelled if the project identified in the Application is not proceeding within 18 months of the execution of a grant agreement, or if not complete after five years of any grant award.

BE IT FURTHER RESOLVED that the City of North Branch acknowledges that allowing an ineligible business to locate in the area directly served by the funded infrastructure may trigger a default of the grant and cause repayment by the City of North Branch.

The City of North Branch certifies that it will comply with all applicable laws, regulations, and rules of the Business Development Infrastructure Application.

NOW, THEREFORE BE IT RESOLVED that the Mayor and City Administrator or their successors in office, are hereby authorized to execute such agreements, and amendments thereto, as are necessary to implement the project(s) on behalf of the applicant.

I CERTIFY THAT the above resolution was adopted by the City Council of the City of North Branch on May 13, 2025.

Approved:

_____
Kevin Schieber, Mayor

Attested:

_____
Matthew Hill, City Administrator

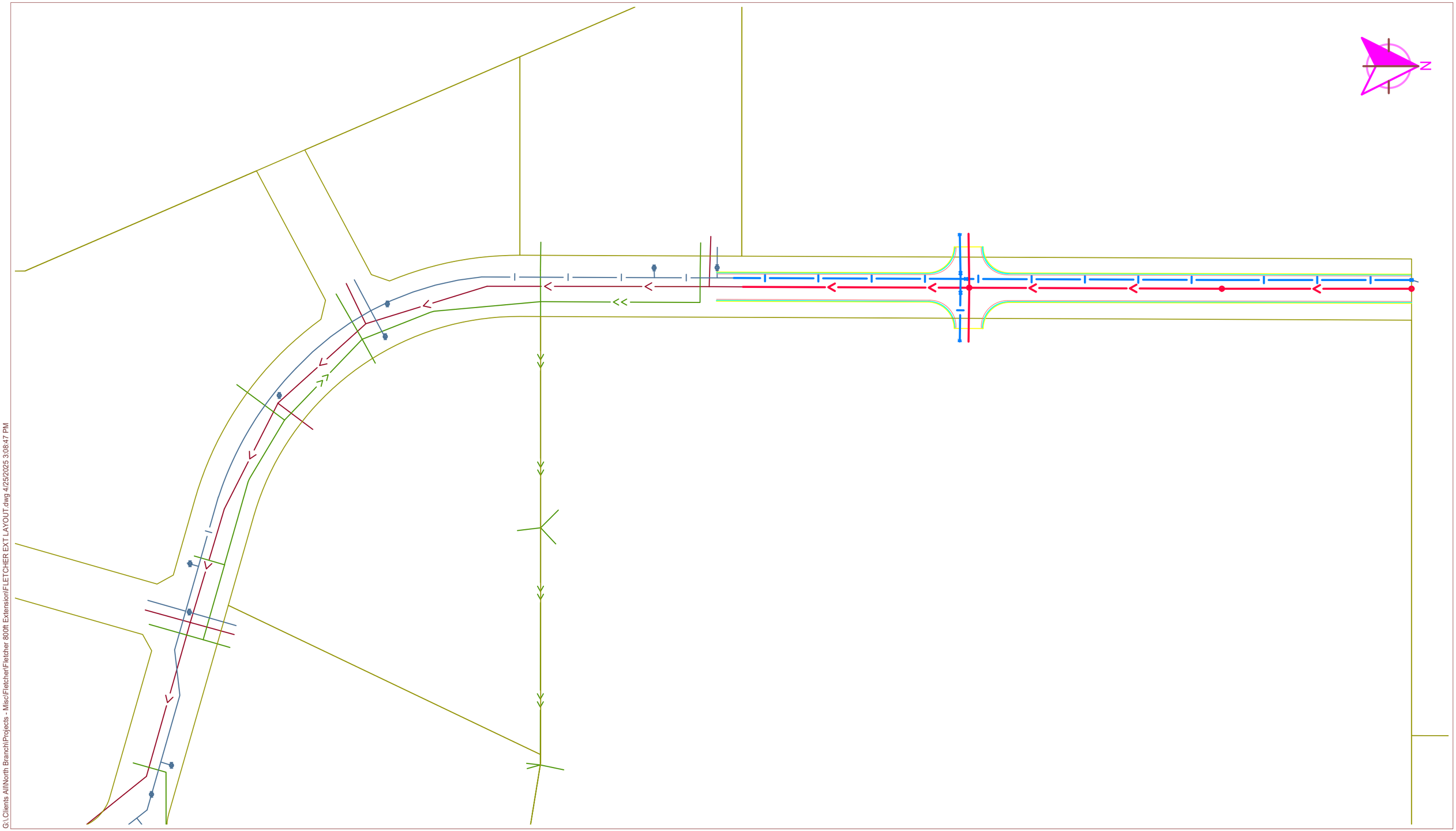

G:\Clients A\N\North Branch\Projects - Misc\Fletcher\Fletcher 800ft Extension\FLETCHER EXT LAYOUT.dwg 4/25/2025 3:08:47 PM

wsb

WSB PROJECT NO.:
023681-000
JULY 16, 2024

FLETCHER AVENUE
GENERAL LAYOUT
CITY OF NORTH BRANCH, MINNESOTA

EXHIBIT 1

Area 1 - Fletcher Ave from existing termini to approximately 805' north

Improvements	Total
Surface	$375,984.00
Sanitary Sewer	$91,204.50
Watermain	$227,359.00
Storm Sewer	$128,502.00
Total Consruction Cost =	**$823,049.50**
Plans and Specs (7%)	$ 52,380.00
Total Project Cost =	**$875,429.50**

FLETCHER AVENUE EXTENSION - EXISTING TERMINI TO 805-FT NORTH

Mat. No.	Item	Units	Estimated Unit Price	Estimated Quantity	Estimated Cost
	SCHEDULE A - SURFACE IMPROVEMENTS				
2021.501	MOBILIZATION	L S	$35,000.00	1	$35,000.00
2104.503	SAWING BITUMINOUS PAVEMENT (FULL DEPTH)	L F	$5.00	50	$250.00
2104.505	REMOVE BITUMINOUS PAVEMENT	S Y	$10.00	550	$5,500.00
2105.507	COMMON EXCAVATION (P)	C Y	$20.00	2000	$40,000.00
2112.519	SUBGRADE PREPARATION	RDST	$200.00	8	$1,600.00
2123.610	STREET SWEEPER (WITH PICKUP BROOM)	HOUR	$150.00	10	$1,500.00
2211.507	AGGREGATE BASE (CV) CLASS 5 (P)	C Y	$32.00	1100	$35,200.00
2331.501	JOINT ADHESIVE	L F	$0.85	1600	$1,360.00
2357.506	BITUMINOUS MATERIAL FOR TACK COAT	GALLON	$3.50	160	$560.00
2360.509	TYPE SP 9.5 WEARING COURSE MIXTURE (2,C)	TON	$88.00	370	$32,560.00
2360.509	TYPE SP 12.5 WEARING COURSE MIXTURE (2,C)	TON	$85.00	460	$39,100.00
2521.518	3" BITUMINOUS WALK	S F	$4.00	12960	$51,840.00
2531.503	CONCRETE CURB & GUTTER DESIGN B618	L F	$22.00	1620	$35,640.00
2563.601	TRAFFIC CONTROL	L S	$1,500.00	1	$1,500.00
2573.502	SILT FENCE, TYPE MS	L F	$3.50	500	$1,750.00
2573.502	STORM DRAIN INLET PROTECTION	EACH	$200.00	8	$1,600.00
2573.503	SEDIMENT CONTROL LOG TYPE STRAW BIOROLL	L F	$3.00	500	$1,500.00
2573.604	STABILIZED CONSTRUCTION ENTRANCE	L S	$1,000.00	1	$1,000.00
2574.507	COMMON TOPSOIL BORROW	C Y	$32.00	360	$11,520.00
2575.505	SEEDING	ACRE	$2,500.00	0.5	$1,250.00
2575.508	SEED MIXTURE 25-131	L B	$5.00	60	$300.00
2575.508	HYDRAULIC STABILIZED FIBER MATRIX	L B	$5.00	1750	$8,750.00
2575.523	RAPID STABILIZATION METHOD 3	M GALLONS	$500.00	2	$1,000.00
2575.535	WATER (TURF ESTABLISHMENT)	M GALLONS	$45.00	10	$450.00
				SUBTOTAL SCHEDULE A - SURFACE IMPROVEMENTS	**$310,730.00**
				+10% CONTINGENCIES	**$31,073.00**
				SUBTOTAL SCHEDULE A - SURFACE IMPROVEMENTS	**$341,803.00**
				+10% CONSTRUCTION INSPECTION	**$34,181.00**
				TOTAL SCHEDULE A - SURFACE IMPROVEMENTS	**$375,984.00**

FLETCHER AVENUE EXTENSION - EXISTING TERMINI TO 805-FT NORTH					
Mat. No.	**Item**	**Units**	**Estimated Unit Price**	**Estimated Quantity**	**Estimated Cost**
	SCHEDULE B - SANITARY SEWER IMPROVEMENTS				
2503.602	CONNECT TO EXISTING SANITARY SEWER	EACH	$2,000.00	1	$2,000.00
2503.603	8" PVC PIPE SEWER - SDR 26	L F	$50.00	90	$4,500.00
2503.603	TELEVISE SANITARY SEWER	L F	$2.50	810	$2,025.00
2503.603	10" PVC PIPE SEWER - SDR 26	L F	$65.00	810	$52,650.00
2506.502	CASTING ASSEMBLY (SANITARY)	EACH	$1,250.00	2	$2,500.00
2506.602	CHIMNEY SEALS	EACH	$350.00	2	$700.00
2506.603	CONST 48" DIA SAN SEWER MANHOLE	L F	$550.00	20	$11,000.00
				SUBTOTAL SCHEDULE B - SANITARY SEWER IMPROVEMENTS	**$75,375.00**
				+10% CONTINGENCIES	**$7,537.50**
				SUBTOTAL SCHEDULE B - SANITARY SEWER IMPROVEMENTS	**$82,912.50**
				+10% CONSTRUCTION INSPECTION	**$8,292.00**
				TOTAL SCHEDULE B - SANITARY SEWER IMPROVEMENTS	**$91,204.50**

FLETCHER AVENUE EXTENSION - EXISTING TERMINI TO 805-FT NORTH					
Mat. No.	**Item**	**Units**	**Estimated Unit Price**	**Estimated Quantity**	**Estimated Cost**
	SCHEDULE C - WATER SYSTEM IMPROVEMENTS				
2104.502	REMOVE GATE VALVE & BOX	EACH	$350.00	1	$350.00
2104.503	REMOVE WATERMAIN	EACH	$10.00	10	$100.00
2504.602	CONNECT TO EXISTING WATER MAIN	EACH	$2,000.00	1	$2,000.00
2504.602	20" GATE VALVE AND BOX	EACH	$10,000.00	1	$10,000.00
2504.602	6" GATE VALVEAND BOX	EACH	$2,400.00	2	$4,800.00
2504.602	HYDRANT ASSEMBLY	EACH	$7,500.00	2	$15,000.00
2504.603	6" WATER MAIN-DUCT IRON CL 52 W/ POLY WRAP	L F	$80.00	170	$13,600.00
2504.603	20" WATER MAIN-DUCT IRON CL 52 W/ POLY WRAP	L F	$160.00	810	$129,600.00
2504.604	4" POLYSTYRENE INSULATION	S Y	$45.00	100	$4,500.00
2504.608	DUCTILE IRON FITTINGS	POUND	$7.00	1,200	$8,400.00
				SUBTOTAL SCHEDULE C - WATERMAIN IMPROVEMENTS	**$187,900.00**
				+10% CONTINGENCIES	**$18,790.00**
				SUBTOTAL SCHEDULE C - WATERMAIN IMPROVEMENTS	**$206,690.00**
				+10% CONSTRUCTION INSPECTION	**$20,669.00**
				TOTAL SCHEDULE C - WATERMAIN IMPROVEMENTS	**$227,359.00**

FLETCHER AVENUE EXTENSION - EXISTING TERMINI TO 805-FT NORTH					
Mat. No.	**Item**	**Units**	**Estimated Unit Price**	**Estimated Quantity**	**Estimated Cost**
	SCHEDULE D - DRAINAGE IMPROVEMENTS				
2502.503	15" RC PIPE SEWER DESIGN 3006 CLASS V	L F	$55.00	108	$5,940.00
2503.503	18" RC PIPE SEWER DESIGN 3006 CLASS III	L F	$70.00	600	$42,000.00
2503.503	21" RC PIPE SEWER DESIGN 3006 CLASS III	L F	$85.00	940	$79,900.00
2503.503	24" RC PIPE APRON	EACH	$1,200.00	1	$1,200.00
2503.602	CONNECT TO EXISTING STORM SEWER	EACH	$1,000.00	1	$1,000.00
2506.502	CASTING ASSEMBLY (STORM)	EACH	$900.00	4	$3,600.00
2506.602	CHIMNEY SEALS	EACH	$350.00	4	$1,400.00
2506.503	CONSTRUCT DRAINAGE STRUCTURE DESIGN SPECIAL	EACH	$2,750.00	2	$5,500.00
2506.503	CONSTRUCT DRAINAGE STRUCTURE DESIGN 60-4020	L F	$850.00	16	$13,600.00
				SUBTOTAL SCHEDULE D - DRAINAGE IMPROVEMENTS	**$106,200.00**
				+10% CONTINGENCIES	**$10,620.00**
				SUBTOTAL SCHEDULE D - DRAINAGE IMPROVEMENTS	**$116,820.00**
				+10% CONSTRUCTION INSPECTION	**$11,682.00**
				TOTAL SCHEDULE D - DRAINAGE IMPROVEMENTS	**$128,502.00**

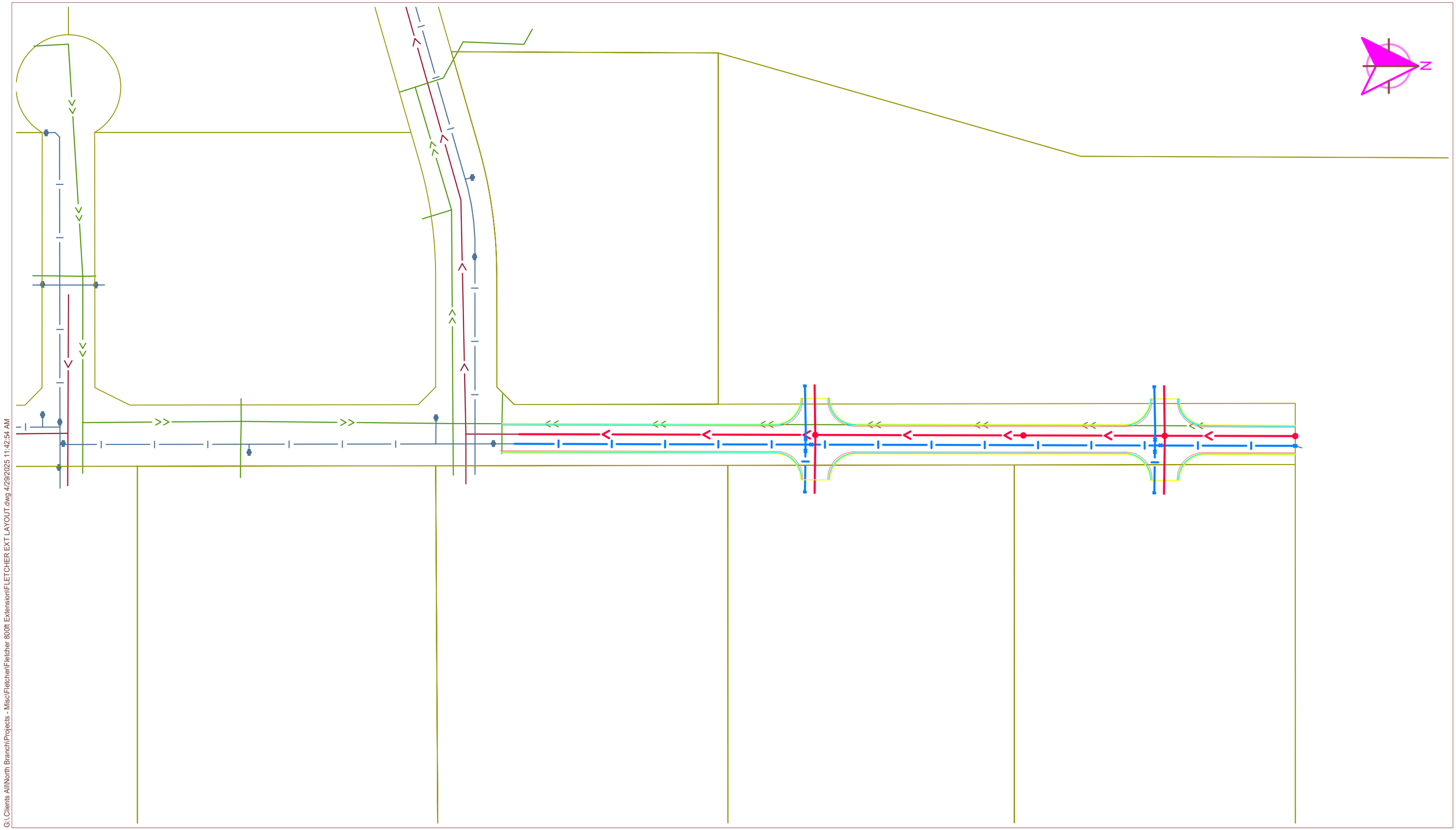

G:\Clients All\North Branch\Projects - Misc\Fletcher\Fletcher 800ft Extension\FLETCHER EXT LAYOUT.dwg 4/29/2025 11:42:54 AM

WSB PROJECT NO.:
023681-000
JULY 16, 2024

GOODVIEW AVENUE
GENERAL LAYOUT
CITY OF NORTH BRANCH, MINNESOTA

EXHIBIT 2

Area 2 - Goodview Avenue from 402nd Street to approximately 920' north

Improvements	Total
Surface	$538,281.00
Sanitary Sewer	$240,004.00
Watermain	$254,077.10
Storm Sewer	$246,308.00
	$1,278,670.10
Plans and Specs (7%)	$ 81,370.00
Total Project Cost =	**$1,360,040.10**

GOODVIEW AVENUE EXTENSION - 402ND STREET TO 920-FT NORTH

Mat. No.	Item	Units	Estimated Unit Price	Estimated Quantity	Estimated Cost
	SCHEDULE A - SURFACE IMPROVEMENTS				
2021.501	MOBILIZATION	L S	$51,000.00	1	$51,000.00
2101.524	CLEARING	TREE	$500.00	6	$3,000.00
2101.524	GRUBBING	TREE	$350.00	6	$2,100.00
2104.503	SAWING BITUMINOUS PAVEMENT (FULL DEPTH)	L F	$5.00	100	$500.00
2104.505	REMOVE BITUMINOUS PAVEMENT	S Y	$10.00	300	$3,000.00
2104.518	REMOVE CONCRETE WALK	S F	$5.00	600	$3,000.00
2105.507	COMMON EXCAVATION (P)	C Y	$20.00	2900	$58,000.00
2112.519	SUBGRADE PREPARATION	RDST	$200.00	10	$2,000.00
2123.610	STREET SWEEPER (WITH PICKUP BROOM)	HOUR	$150.00	20	$3,000.00
2211.507	AGGREGATE BASE (CV) CLASS 5 (P)	C Y	$32.00	1960	$62,720.00
2331.501	JOINT ADHESIVE	L F	$0.85	2000	$1,700.00
2357.506	BITUMINOUS MATERIAL FOR TACK COAT	GALLON	$3.50	50	$175.00
2360.509	TYPE SP 9.5 WEARING COURSE MIXTURE (2,C)	TON	$88.00	500	$44,000.00
2360.509	TYPE SP 12.5 WEARING COURSE MIXTURE (2,C)	TON	$85.00	600	$51,000.00
2521.518	6" CONCRETE WALK	S F	$15.00	600	$9,000.00
2521.518	3" BITUMINOUS WALK	S F	$4.00	14720	$58,880.00
2531.503	CONCRETE CURB & GUTTER DESIGN B618	L F	$22.00	2200	$48,400.00
2531.618	TRUNCATED DOMES	L F	$50.00	48	$2,400.00
2563.601	TRAFFIC CONTROL	L S	$3,000.00	1	$3,000.00
2573.502	SILT FENCE, TYPE MS	L F	$3.50	1000	$3,500.00
2573.502	STORM DRAIN INLET PROTECTION	EACH	$200.00	12	$2,400.00
2573.503	SEDIMENT CONTROL LOG TYPE STRAW BIOROLL	L F	$3.00	800	$2,400.00
2573.604	STABILIZED CONSTRUCTION ENTRANCE	L S	$1,000.00	1	$1,000.00
2574.507	COMMON TOPSOIL BORROW	C Y	$32.00	500	$16,000.00
2575.505	SEEDING	ACRE	$2,500.00	1.3	$3,250.00
2575.508	SEED MIXTURE 25-131	L B	$5.00	120	$600.00
2575.508	HYDRAULIC STABILIZED FIBER MATRIX	L B	$5.00	1287	$6,435.00
2575.523	RAPID STABILIZATION METHOD 3	M GALLONS	$500.00	3	$1,500.00
2575.535	WATER (TURF ESTABLISHMENT)	M GALLONS	$45.00	20	$900.00
				SUBTOTAL SCHEDULE A - SURFACE IMPROVEMENTS	**$444,860.00**
				+10% CONTINGENCIES	**$44,486.00**
				SUBTOTAL SCHEDULE A - SURFACE IMPROVEMENTS	**$489,346.00**
				+10% CONSTRUCTION INSPECTION	**$48,935.00**
				TOTAL SCHEDULE A - SURFACE IMPROVEMENTS	**$538,281.00**

GOODVIEW AVENUE EXTENSION - 402ND STREET TO 920-FT NORTH

Mat. No.	Item	Units	Estimated Unit Price	Estimated Quantity	Estimated Cost
	SCHEDULE B - SANITARY SEWER IMPROVEMENTS				
2503.602	CONNECT TO EXISTING SANITARY SEWER	EACH	$2,000.00	1	$2,000.00
2503.603	6" PVC PIPE SEWER - SDR 26	L F	$50.00	120	$6,000.00
2503.603	TELEVISE SANITARY SEWER	L F	$2.50	1,000	$2,500.00
2503.603	18" PVC PIPE SEWER - SDR 26	L F	$155.00	1,000	$155,000.00
2506.502	CASTING ASSEMBLY (SANITARY)	EACH	$1,250.00	3	$3,750.00
2506.602	CHIMNEY SEALS	EACH	$350.00	3	$1,050.00
2506.603	CONST 48" DIA SAN SEWER MANHOLE	L F	$550.00	51	$28,050.00
				SUBTOTAL SCHEDULE B - SANITARY SEWER IMPROVEMENTS	**$198,350.00**
				+10% CONTINGENCIES	**$19,835.00**
				SUBTOTAL SCHEDULE B - SANITARY SEWER IMPROVEMENTS	**$218,185.00**
				+10% CONSTRUCTION INSPECTION	**$21,819.00**
				TOTAL SCHEDULE B - SANITARY SEWER IMPROVEMENTS	**$240,004.00**

GOODVIEW AVENUE EXTENSION - 402ND STREET TO 920-FT NORTH

Mat. No.	Item	Units	Estimated Unit Price	Estimated Quantity	Estimated Cost
	SCHEDULE C - WATER SYSTEM IMPROVEMENTS				
2104.502	REMOVE GATE VALVE & BOX	EACH	$350.00	1	$350.00
2104.503	REMOVE WATERMAIN	EACH	$10.00	70	$700.00
2504.602	CONNECT TO EXISTING WATER MAIN	EACH	$2,000.00	1	$2,000.00
2504.602	6" GATE VALVE AND BOX	EACH	$6,000.00	4	$24,000.00
2504.602	12" GATE VALVE AND BOX	EACH	$3.00	2	$6.00
2504.602	HYDRANT ASSEMBLY	EACH	$7,500.00	3	$22,500.00
2504.603	6" WATER MAIN-DUCT IRON CL 52 W/ POLY WRAP	L F	$80.00	120	$9,600.00
2504.603	12" WATER MAIN-DUCT IRON CL 52 W/ POLY WRAP	L F	$150.00	920	$138,000.00
2504.604	4" POLYSTYRENE INSULATION	S Y	$45.00	145	$6,525.00
2504.608	DUCTILE IRON FITTINGS	POUND	$7.00	900	$6,300.00
	SUBTOTAL SCHEDULE C - WATERMAIN IMPROVEMENTS				**$209,981.00**
	+10% CONTINGENCIES				**$20,998.10**
	SUBTOTAL SCHEDULE C - WATERMAIN IMPROVEMENTS				**$230,979.10**
	+10% CONSTRUCTION INSPECTION				**$23,098.00**
	TOTAL SCHEDULE C - WATERMAIN IMPROVEMENTS				**$254,077.10**

GOODVIEW AVENUE EXTENSION - 402ND STREET TO 920-FT NORTH

Mat. No.	Item	Units	Estimated Unit Price	Estimated Quantity	Estimated Cost
	SCHEDULE D - DRAINAGE IMPROVEMENTS				
2502.503	15" RC PIPE SEWER DESIGN 3006 CLASS V	L F	$68.00	120	$8,160.00
2503.503	30" RC PIPE SEWER DESIGN 3006 CLASS III	L F	$150.00	1,000	$150,000.00
2503.602	CONNECT TO EXISTING STORM SEWER	EACH	$1,000.00	1	$1,000.00
2506.502	CASTING ASSEMBLY (STORM)	EACH	$900.00	6	$5,400.00
2506.602	CHIMNEY SEALS	EACH	$350.00	6	$2,100.00
2506.503	CONSTRUCT DRAINAGE STRUCTURE DESIGN SPECIAL	EACH	$2,750.00	6	$16,500.00
2506.503	CONSTRUCT DRAINAGE STRUCTURE DESIGN 60-4020	L F	$850.00	24	$20,400.00
				SUBTOTAL SCHEDULE D - DRAINAGE IMPROVEMENTS	**$203,560.00**
				+10% CONTINGENCIES	**$20,356.00**
				SUBTOTAL SCHEDULE D - DRAINAGE IMPROVEMENTS	**$223,916.00**
				+10% CONSTRUCTION INSPECTION	**$22,392.00**
				TOTAL SCHEDULE D - DRAINAGE IMPROVEMENTS	**$246,308.00**

City of North Branch
Staff Report

Prepared By: Sharon Wright, Finance Director

Presenter: Sharon Wright, Finance Director

Date: 05/07/2025

Board & Commission: City Council

Subject: Approval of Resolution R-192-2025 for the closing of funds

---

Background

During the 2024 audit, Abdo recommended to the City that we close several funds due to inactivity. After reviewing these funds, the finance department agrees with the auditors' assessment and recommends closing these funds into other similar purpose funds in the 2024 fiscal year. Below is a chart identifying these funds and the balances to be moved:

Fund to close	Fund Desc	End Bal	Fund to move to	Fund Desc
105	W&L Wage Benefit Clearing Fund	(65,022.67)	615	Water Fund
260	Tax Abatement Fund	22,298.74	101	General Fund
394	2017B (2006C) Debt Service Fund	21,927.25	393	2017B (2006B) Redev Dist 2 TIF Fund
397	2007A Debt Service Fund	(77,449.97)	393	2017B (2006B) Redev Dist 2 TIF Fund
400	Fixed Wireless Project Fund	(17,031.54)	245	CARES Act Fund
478	Palletman Fund	(8,007.30)	101	General Fund
492	Housing Project Fund	8,584.89	101	General Fund
503	399th Imp. Project Fund	343,589.18	476	Industrial Park/ESSBY Fund

Requested Action

To approve Resolution R-192-2025 authorizing the auditors and the Finance Director to retroactively close funds 105, 260, 394, 397, 400, 478, 492, and 503 to 12/31/2024 during the 2024 audit process.

Voting Requirements:

Voting Options **Simple Majority**

STATE OF MINNESOTA

COUNTY OF CHISAGO

CITY OF NORTH BRANCH

CITY COUNCIL RESOLUTION NO. R-192-2025

A RESOLUTION AUTHORIZING THE CLOSING OF FUNDS IN THE CITY FINANCIAL STATEMENTS FOR THE CITY OF NORTH BRANCH, MINNESOTA

WHEREAS, the City of North Branch has identified the need for closing inactive funds: and

WHEREAS, the City will move any remaining money into similar funds; and

WHEREAS, the City has identified this need in conjunction with the auditors.

The City of North Branch certifies that it is complying with the auditors request and all applicable laws, regulations, and rules in regards to the closing of these funds.

NOW, THEREFORE BE IT RESOLVED that the Mayor and City Administrator or their successors in office, are hereby authorized to execute such agreements, and amendments thereto, as are necessary to implement the project(s) on behalf of the applicant.

I CERTIFY THAT the above resolution was adopted by the City Council of the City of North Branch on May 13, 2025.

Approved:

_____
Kevin Schieber, Mayor

Attested:

_____
Matthew Hill, City Administrator

LG220 Application for Exempt Permit

An exempt permit may be issued to a nonprofit organization that:

- conducts lawful gambling on five or fewer days, and
- awards less than $50,000 in prizes during a calendar year.

If total raffle prize value for the calendar year will be $1,500 or less, contact the Licensing Specialist assigned to your county by calling 651-539-1900.

Application Fee (non-refundable)

Applications are processed in the order received. If the application is postmarked or received 30 days or more before the event, the application fee is **$100**; otherwise the fee is **$150**.

Due to the high volume of exempt applications, payment of additional fees prior to 30 days before your event will not expedite service, nor are telephone requests for expedited service accepted.

ORGANIZATION INFORMATION

Organization Name: Memories Made Outdoors

Previous Gambling Permit Number: X- 95646-25-001

Minnesota Tax ID Number, if any: _____

Federal Employer ID Number (FEIN), if any: 99-0994395

Mailing Address: 7566 387th Street

City: North Branch State: MN Zip: 55056 County: Chisago

Name of Chief Executive Officer (CEO): Michael Ferrell

CEO Daytime Phone: 952-992-0083 CEO Email: mike@memoriesmadeoutdoors.org

(permit will be emailed to this email address unless otherwise indicated below)

Email permit to (if other than the CEO): Michael Ferrell

NONPROFIT STATUS

Type of Nonprofit Organization (check one):

☐ Fraternal ☐ Religious ☑ Veterans ☐ Other Nonprofit Organization

Attach a copy of one of the following showing proof of nonprofit status:

(DO NOT attach a sales tax exempt status or federal employer ID number, as they are not proof of nonprofit status.)

☐ **A current calendar year Certificate of Good Standing**
Don't have a copy? Obtain this certificate from:
MN Secretary of State, Business Services Division
60 Empire Drive, Suite 100
St. Paul, MN 55103

Secretary of State website, phone numbers:
www.sos.state.mn.us
651-296-2803, or toll free 1-877-551-6767

☑ **IRS income tax exemption (501(c)) letter in your organization's name**
Don't have a copy? To obtain a copy of your federal income tax exempt letter, have an organization officer contact the IRS toll free at 1-877-829-5500.

☐ **IRS - Affiliate of national, statewide, or international parent nonprofit organization (charter)**
If your organization falls under a parent organization, attach copies of both of the following:
1. IRS letter showing your parent organization is a nonprofit 501(c) organization with a group ruling; and
2. the charter or letter from your parent organization recognizing your organization as a subordinate.

GAMBLING PREMISES INFORMATION

Name of premises where the gambling event will be conducted (for raffles, list the site where the drawing will take place): 7566 387th St North Branch MN, 55056

Physical Address (do not use P.O. box): _____

Check one:

☑ City: North Branch Zip: 55056 County: Chisago

☐ Township: _____ Zip: _____ County: _____

Date(s) of activity (for raffles, indicate the date of the drawing): September 30th, 2025 or prior when ticket sales are exha

Check each type of gambling activity that your organization will conduct:

☐ Bingo ☐ Paddlewheels ☐ Pull-Tabs ☐ Tipboards ☑ Raffle

Gambling equipment for bingo paper, bingo boards, raffle boards, paddlewheels, pull-tabs, and tipboards must be obtained from a distributor licensed by the Minnesota Gambling Control Board. EXCEPTION: Bingo hard cards and bingo ball selection devices may be borrowed from another organization authorized to conduct bingo. To find a licensed distributor, go to ***www.mn.gov/gcb*** and click on ***Distributors*** under the ***List of Licensees*** tab, or call 651-539-1900.

LG220 Application for Exempt Permit

LOCAL UNIT OF GOVERNMENT ACKNOWLEDGMENT (required before submitting application to the Minnesota Gambling Control Board)

CITY APPROVAL for a gambling premises located within city limits

☐ The application is acknowledged with no waiting period.

☐ The application is acknowledged with a 30-day waiting period, and allows the Board to issue a permit after 30 days (60 days for a 1st class city).

☐ The application is denied.

Print City Name: _____

Signature of City Personnel:

_____

Title: _____ Date: _____

The city or county must sign before submitting application to the Gambling Control Board.

COUNTY APPROVAL for a gambling premises located in a township

☐ The application is acknowledged with no waiting period.

☐ The application is acknowledged with a 30-day waiting period, and allows the Board to issue a permit after 30 days.

☐ The application is denied.

Print County Name: _____

Signature of County Personnel:

_____

Title: _____ Date: _____

TOWNSHIP (if required by the county)
On behalf of the township, I acknowledge that the organization is applying for exempted gambling activity within the township limits. (A township has no statutory authority to approve or deny an application, per Minn. Statutes, section 349.213.)

Print Township Name: _____

Signature of Township Officer: _____

Title: _____ Date: _____

CHIEF EXECUTIVE OFFICER'S SIGNATURE (required)

The information provided in this application is complete and accurate to the best of my knowledge. I acknowledge that the financial report will be completed and returned to the Board within 30 days of the event date.

Chief Executive Officer's Signature: _____ Date: May 7, 2025
(Signature must be CEO's signature; designee may not sign)

Print Name: Michael Ferrell

REQUIREMENTS

Complete a separate application for:

- all gambling conducted on two or more consecutive days; or
- all gambling conducted on one day.

Only one application is required if one or more raffle drawings are conducted on the same day.

Financial report to be completed within 30 days after the gambling activity is done:
A financial report form will be mailed with your permit. Complete and return the financial report form to the Gambling Control Board.

Your organization must keep all exempt records and reports for 3-1/2 years (Minn. Statutes, section 349.166, subd. 2(f)).

MAIL APPLICATION AND ATTACHMENTS

Mail application with:

____ a copy of your proof of nonprofit status; and

____ application fee (non-refundable). If the application is postmarked or received 30 days or more before the event, the application fee is **$100**; otherwise the fee is **$150**. Make check payable to **State of Minnesota**.

To: Minnesota Gambling Control Board
1711 West County Road B, Suite 300 South
Roseville, MN 55113

Questions?
Call the Licensing Section of the Gambling Control Board at 651-539-1900.

Data privacy notice: The information requested on this form (and any attachments) will be used by the Gambling Control Board (Board) to determine your organization's qualifications to be involved in lawful gambling activities in Minnesota. Your organization has the right to refuse to supply the information; however, if your organization refuses to supply this information, the Board may not be able to determine your organization's qualifications and, as a consequence, may refuse to issue a permit. If your organization supplies the information requested, the Board will be able to process the application. Your organization's name and address will be public information when received by the Board. All other information provided will be private data about your organization until the Board issues the permit. When the Board issues the permit, all information provided will become public. If the Board does not issue a permit, all information provided remains private, with the exception of your organization's name and address which will remain public. Private data about your organization are available to Board members, Board staff whose work requires access to the information; Minnesota's Department of Public Safety; Attorney General; Commissioners of Administration, Minnesota Management & Budget, and Revenue; Legislative Auditor, national and international gambling regulatory agencies; anyone pursuant to court order; other individuals and agencies specifically authorized by state or federal law to have access to the information; individuals and agencies for which law or legal order authorizes a new use or sharing of information after this notice was given; and anyone with your written consent.

This form will be made available in alternative format (i.e. large print, braille) upon request.

An equal opportunity employer

City of North Branch
Staff Report

Prepared By: Carla Golden, Liquor Operations Director

Presenter:

Date: 05/08/2025

Board & Commission: City Council

Subject: Receive the resignation of Terry Anderson, part-time liquor store clerk.

Terry Anderson has been employed by the City of North Branch since October 23rd, 2023. On April 12, Terry submitted his letter of Resignation, with his last day of employment being May 17, 2025. Terry will be leaving the City of North Branch in good standing. Terry has been an outstanding team member. Liquor Operations Director Carla Golden recommends accepting the registration of Terry Anderson.

Voting Requirements:

Voting Options	**Simple Majority**

City of North Branch
Staff Report

Prepared By: Nathan Sondrol, Community Development Director

Presenter: Nathan Sondrol, Community Development Director

Date: 05/08/2025

Board & Commission: Parks, Trails and Open Space Commission

Subject: Approval of funding support for Christopher Capaul's Riverwalk Park Eagle Scout Project

---

Background
Christopher Capaul presented a proposal to the PTOS Commission on August 5, 2024, to install concrete access paths, bench pads and native plantings and landscaping at the Riverwalk Park Dome Structure for his Eagle Scout project.
The Commission reviewed and approved the request at that meeting. Mr. Capaul has been working on project planning and fundraising for the project and will be providing an update to the commission on the project. The total cost of the project is $6,000. Mr. Capaul has raised over $2,500 to date along with in-kind donations at value of approximately $1,800. Mr. Capaul is continuing to conduct fundraising for the project and is requesting funding support from the city to ensure the full project can be completed. Attached is a general overview of the project.

Recommendations
The Parks, Trails and Open Space Commission recommended approval of an amount not to exceed $2,500 towards the Riverwalk Park Scout improvement project to ensure the project will be able to be completed with the funds coming from the park improvement fund.

Requested action
Approval of an amount not to exceed $2,500 towards Christopher Capaul's Riverwalk Park Eagle Scout improvement project to assist with the installation of concrete paths, bench pads and pollinator plantings with funds coming from the park improvement fund.

Voting Requirements:

Voting Options **Simple Majority**

Bench and Library

Capaul

Shelter Path Area

Second Bench

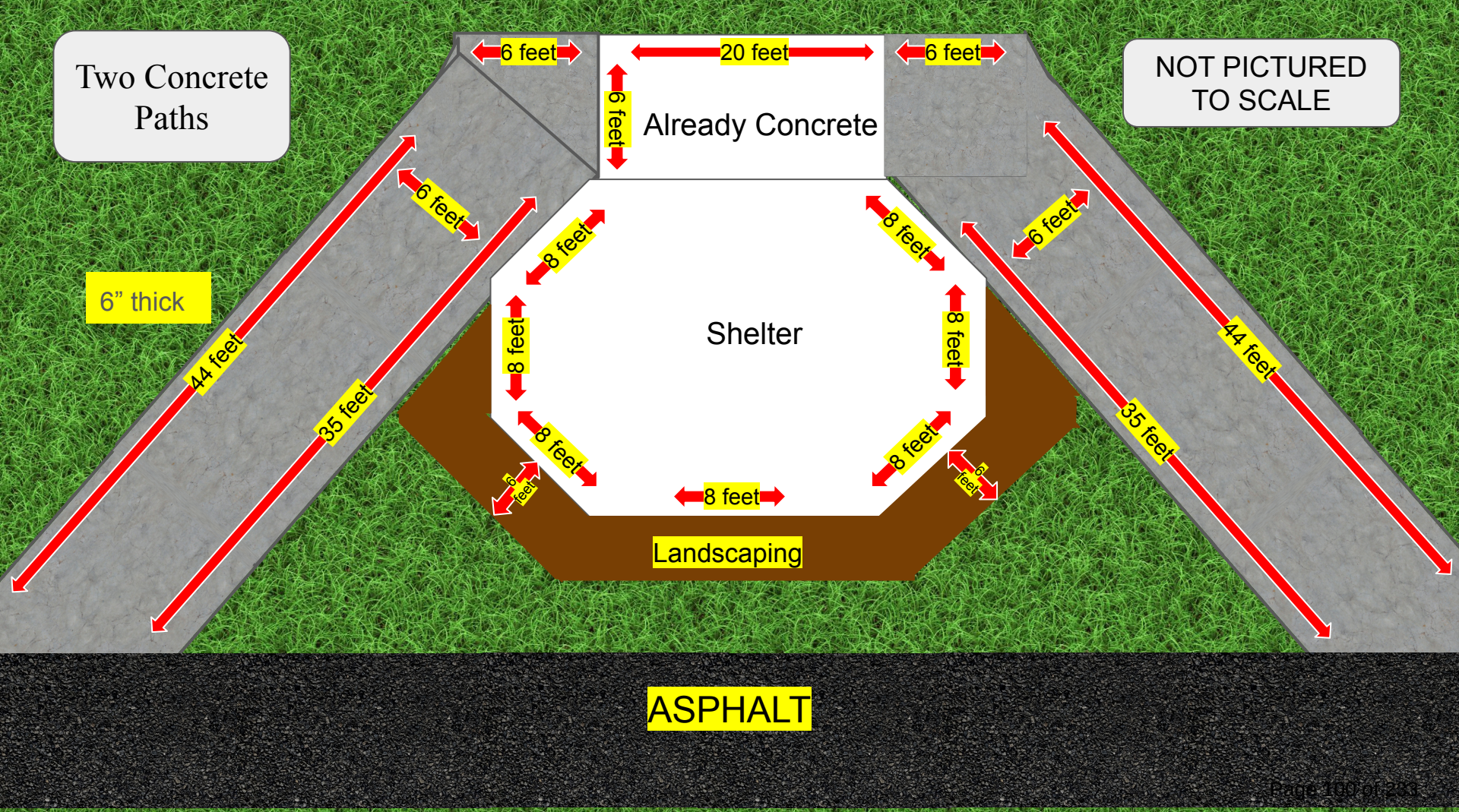
Two Concrete Paths
NOT PICTURED TO SCALE
6 feet
20 feet
6 feet
6 feet
Already Concrete
6 feet
6 feet
8 feet
8 feet
8 feet
Shelter
8 feet
8 feet
8 feet
8 feet
6 feet
6 feet
8 feet
6" thick
44 feet
35 feet
44 feet
35 feet
Landscaping
ASPHALT

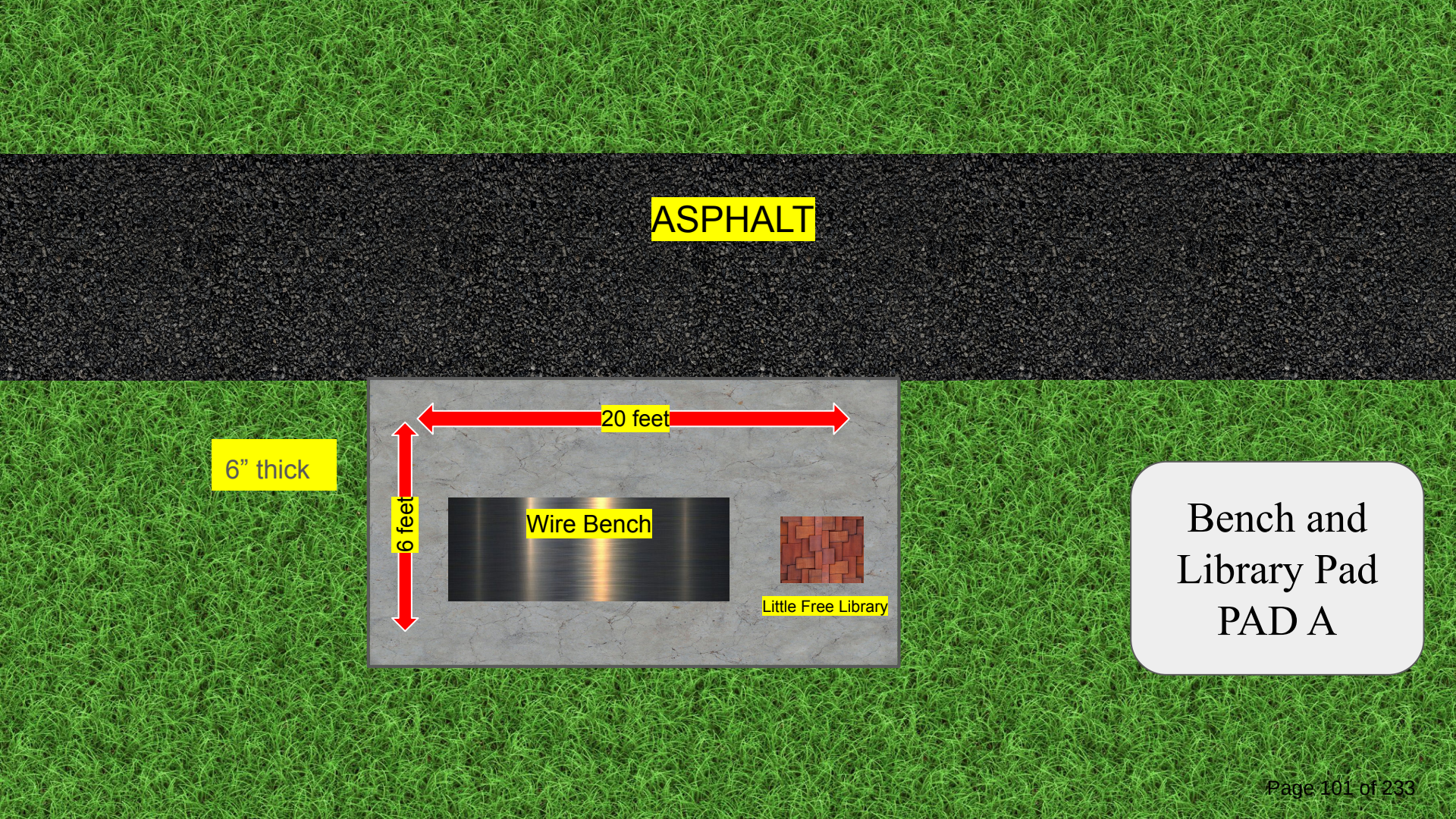

Bench and Library Pad PAD A

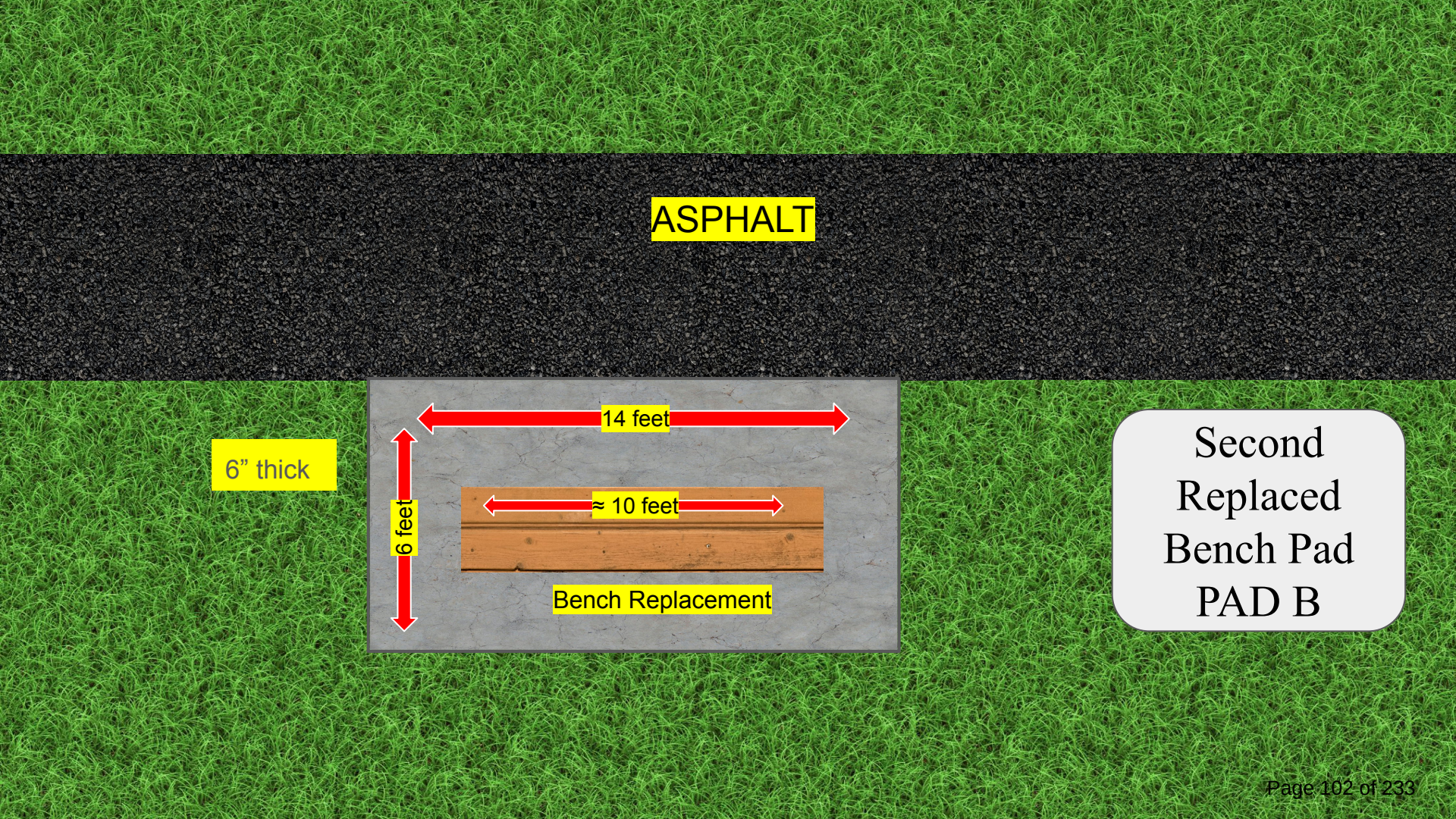
ASPHALT
6” thick
14 feet
6 feet
≈ 10 feet
Bench Replacement
Second Replaced Bench Pad PAD B

Values

Concrete paths: 4.88 yards per path - 5.1 yds order amount

9.77 yds for both paths - 10.5yds order amount

Pad A: 6’ by 20’, 6” thick, 2.22yds - 2.5yds order amount

Pad B: 6’ by 14’, 6” thick, 1.5yds - 1.65 order amount

Total: 13.49yds - 14.5yds order amount

City of North Branch
Staff Report

Prepared By: Nathan Sondrol, Community Development Director

Presenter: Nathan Sondrol, Community Development Director

Date: 05/08/2025

Board & Commission: Parks, Trails and Open Space Commission

Subject: Approval of Northwood Park Trees/Landscaping quote for DNR Outdoor Recreation Grant

---

Background

The City of North Branch submitted an application to the MnDNR Outdoor Recreation Grant program for 4 pickleball courts, accessible paths, site amenities, playground resurfacing and associated landscaping in Northwood Park in March 2023 for a total project cost of $280,000. The City was notified that it received a $140,000 grant to complete the project with the remaining $140,000. The grant funds are reimbursed after the improvements have been completed. The original application included a landscaping budget item of $15,000. City staff is in the process of obtaining quotes for tree plantings for screening for the park and will provide the quotes as soon as they are received.

The city received the following quotes:

Vendor	Cost Per Tree	Trees	Total
Shermik Tree Farm	$525	10	$5,250
Branch Landscape	$900	10	$9,000

Recommendations

The PTOS Commission recommended approval of the low quote within the budget limits of $15,000 for tree planting in the park at the May 5, 2025 meeting.

Requested Action:

To recommend approval of the low quote from Shermik Tree Farms ($525) tree for the landscaping at Northwood Park not to exceed the budgeted limits $15,000 amount of the grant with the funds coming from the park dedication fund (50%) and the DNR Grant (50%)

Voting Requirements:

Voting Options **Simple Majority**

Northwood Park

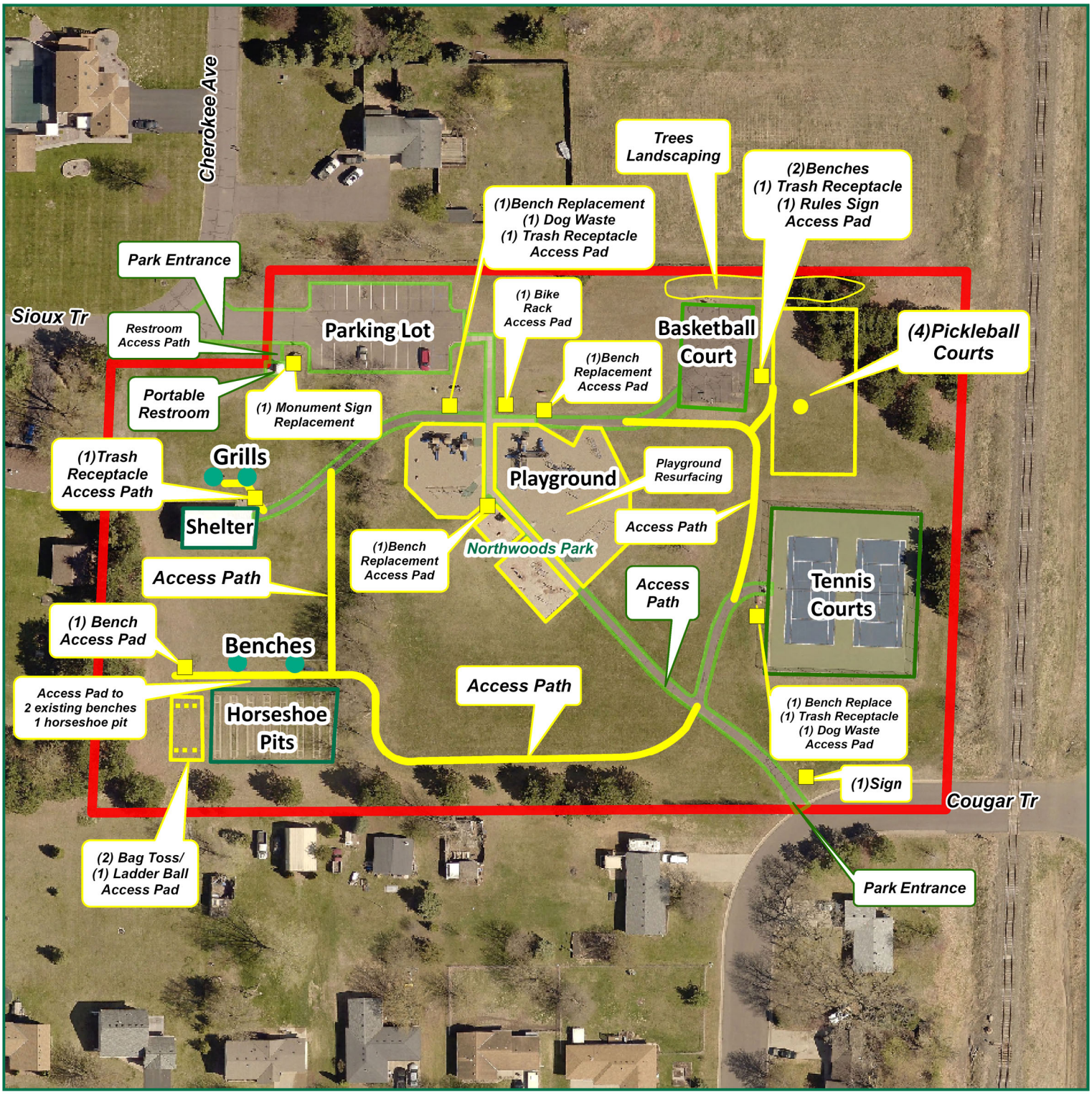

CITY OF NORTH BRANCH EST. 1881

RECREATIONAL SITE PLAN

Northwood Park
39581 Cherokee Ave
5.4 ac

0 25 50 100 Feet
Scale: 1":100'

Proposed Improvements
Proposed Trail/Path
Existing Roads
Park Boundary
PlayGround

City of North Branch
Staff Report

Prepared By:

Presenter:

Date: 05/08/2025

Board & Commission: City Council

Subject: Approval of Special Event Permit Application for Wildridge Block Party and Street Closure

---

Voting Requirements:

Voting Options	**Simple Majority**

CITY OF NORTH BRANCH

SPECIAL EVENT PERMIT APPLICATION

CONTACT INFORMATION

Group/Organization :	The Original Wildridge Assoc.		
Contact Person:	Haylee Goulet		
Address:	5074 382nd Dr		
Phone:	651-587-5521	**Email:**	Hayleemgoulet@gmail.com

EVENT INFORMATION

Type of Event:	New or Renewal/Change in Application		
Event Name/Title:	Neighborhood gathering		
Description of Event:	to gather homeowners together to kickoff summer while eating great food from Medina Taco		
Proposed Location:	field Stone	**Estimated Attendance:** 50	

Event Date and Time	Date	Time
Set Up	June 7, 25	2-7pm
Actual Event	June 7, 25	4-7pm
Clean Up	June 7, 25	7pm

EVENT FEATURES

Will any signs/banners be put up? *If yes, number and size?*	Maybe
Will there be any inflatables? *If yes, provide insurance certificate from rental vendor. Note: No staking is allowed! Must use weights or other.*	no
Will there be any entertainment? *If yes, what type?*	Maybe yard games
Will sound amplification be used? *If yes, hours and type:*	no
Will a stage or tent(s) be set up? *If yes, Include size and dimensions, Note: No staking is allowed! Must use weights or other.*	no
Will merchandise be sold? *If yes, a transient merchant license is required from the city. Please include how many vendors:*	no
Will food be preparer or served on site? *If yes, contact Minnesota Department of Health*	Yes - Medina Taco
Will alcohol be served? *If yes, contact the Minnesota Department of Health.*	no
Will there be a fireworks display? *If yes, obtain permit from City Hall.*	no

ATTACHMENTS *(please attach additional sheets as needed)*

Site Plan – attached ***(This is mandatory for all events.*** *Include any tables, stages, tents, fencing, portable restrooms, vendor booths, trash containers, barricades, etc. If the event includes a parade, race or walk, attach a route map with directional arrows, rest stops, crossings, signage, etc.)*
✓ Certificate of Insurance not needed *(Include: Policy Number, Amount and Provisions that the City of North Branch is included as additional insured. The insurance requirements depend on the risk level of the event and are determined by the City.)*
✓ Permits not needed *(Department of Health, Transient Merchant, Peddlers License, etc.)*
✓ Signatures *(All signatures from properties affected, i.e. Street Closure all properties that have vehicle access)*
✓ Proof of Non-Profit Status not needed

HOLD HARMLESS AGREEMENT

The sponsor(s) of this event hereby agrees to save and hold harmless the City of North Branch, its officers, agents, employees, and members from all claims, suits, or actions of whatsoever nature resulting or arising from this activity. As the sponsor or authorized representative, I certify that the information is provided as accurate and true to the best of my knowledge and agree to pay the permit fee for this event based upon the information provided in this application. I realize my submittal of this application request constitutes a contract between myself and the City of North Branch and is a release of Liability.

Hayley Lonhart — 5/8/25

Signature of Applicant or Authorized Agent — Date

For Office Use Only

DEPARTMENT	APPROVAL SIGNATURE	DATE
City Administrator		
Public Works		
Police		
Parks		
Fire		

Application Fee	Damage Deposit	Date Received	Check #	Receipt #
	$100			

Attendance	**0-100**	**101 +**
Resident	$0	$100
Non-Resident	$50	$100

SERVICES *(After reviewing the event application, Services **may be required** for the event)*

Will event Use, Close or Block any of the following: City Streets or Right-of-Way City Sidewalks or Trails Public Parking Lots or Spaces we would only block of Fieldstone. Homeowners would be able to come + go.
Will event need barricades? *If yes, number needed.* yes (4)
Will event need water or electric? *If yes, please describe.* No.
Will portable restrooms be needed? *If yes, how many.* NO
Will extra trash receptacles be needed? *If yes how many?* no *Note: Receptacles placed on pavement must have 2" thick wood material placed underneath receptacle touch points.*
Describe trash removal and cleanup during and after the event. We will clean up after event.
Will event need traffic control? no *If yes, contact North Branch Police Department, 651-674-8848*
Describe crowd control procedure to ensure the safety of participants and spectators: only Wildridge homeowners are invited. low attendance no control is needed.
Will "No Parking Signs" be needed? *If yes, how many?* no
Will event need security? *If yes, list security company and contact info:* no
Will event need EMS? *If yes, contact Lakes Region EMS, 651-277-4911* no
Describe plans to provide first aid if needed: We have trained medical staff in our development
Describe the Emergency Action Plan if severe weather should arrive: We will cancel the event.
List any other pertinent information: *(Animals, etc.)* Animals are not allowed.

COMMENTS

Jennifer Schulz	38176 Fieldstone Dr
Ryan Wille	38137 Fieldstone Dr
[illegible]	38147 FIELDSTONE DR
Ralph Bader	38166 FIELDSTONE
[illegible]	38112 Fieldstone Dr.
[illegible]	5178 381st Lane

Gmail

Haylee Goulet <hayleemgoulet@gmail.com>

Block party

Karen Hermann <khermann65@gmail.com> Thu, May 8, 2025 at 2:16 PM
To: Hayleemgoulet@gmail.com

Hello:

I am fine with whatever you need to do. If the wording isn't what you need then email me back exactly what you need.
Thank you,
Karen Hermann
Karla Hermann
Sent from my iPhone

June 7

From: Tracy Smetana (tmbs29@gmail.com)

To: wildridgeplat@yahoo.com

Date: Tuesday, May 6, 2025 at 09:41 AM CDT

We are ok with blocking Fieldstone for this event.

Tracy Smetana
38154 Fieldstone Dr

Fieldstone Street Block

From: Bob Hylland (rbhylland@hotmail.com)

To: wildridgeplat@yahoo.com

Date: Monday, May 5, 2025 at 09:58 PM CDT

I would be in favor of blocking off Fieldstone Drive on Saturday, June 7 for a neighborhood event 3-7pm.

Bob Hylland
38136 Fieldstone Drive

Permission to block Fieldstone

From: Lori Pulkrabek (loripulk@gmail.com)

To: wildridgeplat@yahoo.com

Date: Tuesday, May 6, 2025 at 06:34 PM CDT

We grant permission to block off Fieldstone Drive on June 7, 3-7 pm for a neighborhood gathering.

Thanks,

Lori Pulkrabek and Eric Strouse
38186 Fieldstone Drive

Sent from my iPhone

Haylee Goulet
5074 382nd Dr.
North Branch, MN 5505
Wildridgeplat@yahoo.com

Date: May 8, 2025

City of North Branch
6408 Elm Street
North Branch, MN 55056

Subject: Request for Street Closure and Barricades for Neighborhood Event on June 7, 2025

Dear City of North Branch,

On behalf of the residents of The Original Wildridge Association, I am writing to request approval for a temporary street closure on Fieldstone for a community gathering scheduled for Saturday, June 7, 2025, from 2:00 PM to 7:00 PM.

As part of the event, we will have Medina Taco serving food, and we will provide tables, chairs, garbage receptacles, and lawn games for local residents to enjoy.

We are respectfully asking for the city's approval to block off the designated section of Fieldstone and to request the use of barricades to safely close off the street during the event. We will ensure that emergency access is maintained and that the area is cleaned up promptly after the event concludes.

We appreciate your consideration and look forward to working with the city to make this a safe and enjoyable event for our neighborhood.

Sincerely,
Haylee Goulet

President
The Original Wildridge Association

Gmail

Haylee Goulet <hayleemgoulet@gmail.com>

Fieldstone

L. McCormick <mccormick2160@msn.com> Thu, May 8, 2025 at 9:05 AM
To: Haylee Goulet <hayleemgoulet@gmail.com>

Good Morning.

I give my permission for Fieldstone to be blocked off for the Original Wildridge neighborhood party.

Lori McCormick
5089 382nd Dr.

Get Outlook for Android

OFFICIAL PLAT

WILDRIDGE

CITY OF NORTH BRANCH
COUNTY OF CHISAGO
SEC. 19, T. 35, R. 21

NOTE REGARDING WETLANDS:

The Minnesota Department of Natural Resources, United States Corps of Engineers and other water management agencies have categorized various wetlands, which are not acknowledged by Chapter 505.02, Subdivision 1 of Minnesota Statutes and may not be shown hereon. Development of lands containing soil wetlands may be subject to special conditions or limitations.

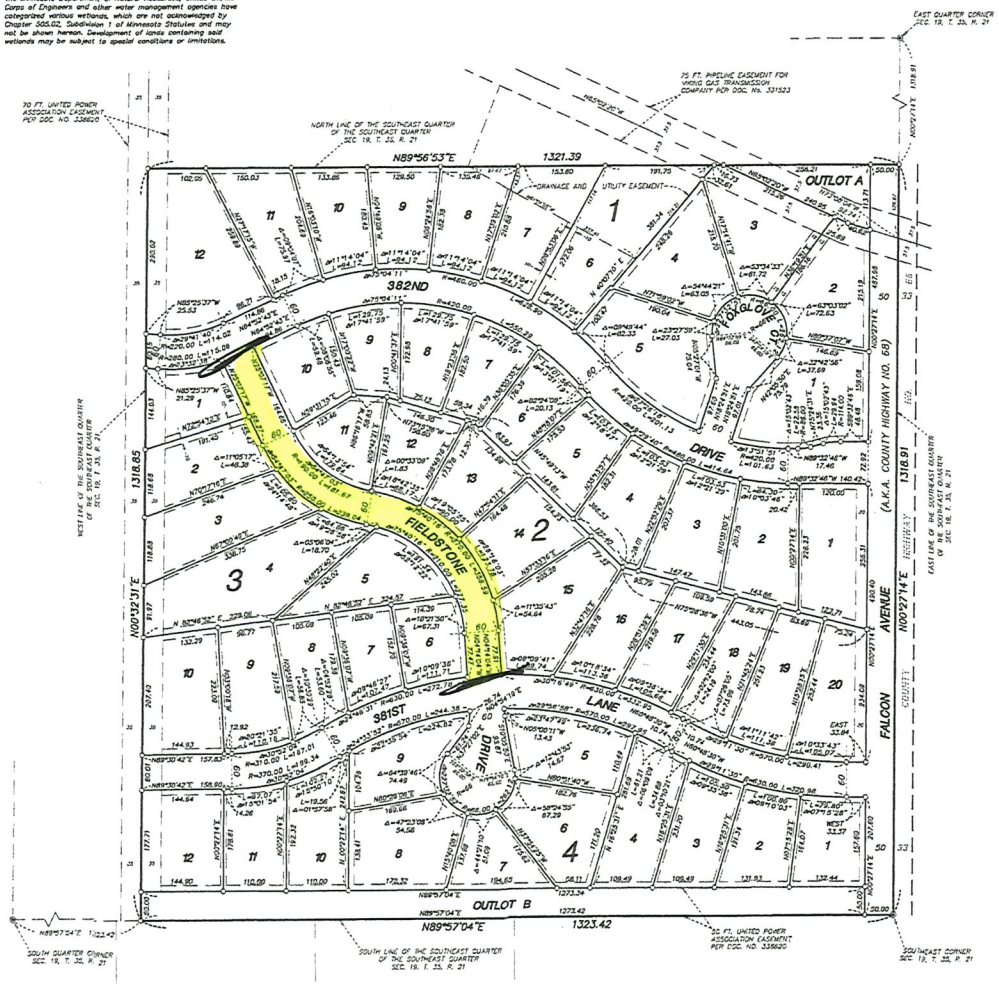

KNOW ALL MEN BY THESE PRESENTS: That Farmwood Developers L.L.C., a Minnesota Limited Liability Company, fee owners of the following described property situated in the County of Chisago, State of Minnesota, to wit:

The Southeast Quarter of the Southeast Quarter of Section 19, Township 35, Range 21, Chisago County, Minnesota. Subject to any easements, restrictions and reservations of record, if any.

Has caused the same to be surveyed and platted as WILDRIDGE and does hereby donate and dedicate to the public for public use forever FALCON AVENUE, 382ND DRIVE, FIELDSTONE DRIVE, 981ST LANE, FOXGLOVE COURT and does hereby dedicate the drainage and utility easements as shown on this plat for drainage and utility purposes.

In witness whereof said Farmwood Developers L.L.C., a Minnesota Limited Liability Company has caused these presents to be signed by its proper officers this 29 day of May 2001.

Douglas P. Studer, President

Steven K. Vanden Heuvel, Executive Vice-President

STATE OF MINNESOTA
COUNTY OF CHISAGO
The foregoing instrument was acknowledged before me this 29 day of May 2001 by Douglas P. Studer, President and Steven K. Vanden Heuvel, Executive Vice-President, of Farmwood Developers, L.L.C., a Minnesota Limited Liability Company.

TANYA K. DANELZUK
Notary Public-Minnesota
My Comm. Expires Jan 31, 2006

Tanya K. Danielzuk
Notary Public Chisago County, Minnesota.
My commission expires 1-31-06

I, Dale B. Anderson, hereby certify that I have surveyed and platted the property as WILDRIDGE; that this plat is a true and correct representation of said survey; that all distances are correctly shown on the plat in feet and hundredths of a foot; that all monuments will be correctly placed in the ground as shown, within one year after recording; that the outside boundary lines are correctly designated; and that there are no wetlands, easements, or public highways to be designated on said plat other than as shown thereon. (subject to notation regarding wet lands shown on the face of this plat.)

Dale B. Anderson, Land Surveyor
Minnesota License Number 16091

STATE OF MINNESOTA
COUNTY OF Washington
The foregoing Surveyor's Certificate was acknowledged before me this 17th day of January 2001 by Dale B. Anderson, Land Surveyor, Minnesota License Number 16091.

WILLIAM J. HADDICK
NOTARY PUBLIC-MINNESOTA
My Commission Exp. Jan. 31, 2006

William J. Haddick
Notary Public, Washington County, Minnesota.
My commission expires Jan 31, 2006

Approved by the City Council of the City of North Branch, Minnesota this 24th day of July 2000 and is in compliance with the provisions of Chapter 505.03, Subdivision 2, Minnesota Statutes.

Signed John Bergmann
Mayor

Signed Bridgette Tomas
Clerk

No delinquent taxes and transfers entered this 30th day of May 2001.

Dennis J. Fresl
Chisago County Auditor
By Janet Engstrom
Deputy

I hereby certify that the taxes for the year 2001 on the property described herein are paid this 30th day of May 2001.

Chisago County Treasurer

I hereby certify that this instrument was filed in the office of the County Recorder for record on this 30th day of May 2001 at 3:30 o'clock P M. and was duly recorded as Document No. 379540

Chisago County Recorder

DRAINAGE AND UTILITY EASEMENTS ARE SHOWN THUS:

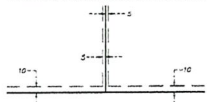

BEING 5 FEET IN WIDTH, AND ADJOINING SIDE LOT LINES, AND 10 FEET IN WIDTH, AND ADJOINING STREET AND REAR LOT LINES, UNLESS OTHERWISE SHOWN ON THE PLAT.

FOR THE PURPOSES OF THIS PLAT THE SOUTH LINE OF THE SOUTHEAST QUARTER OF THE SOUTHEAST QUARTER OF SECTION 19, TOWNSHIP 35, RANGE 21 IS ASSUMED TO HAVE A BEARING OF NORTH 89 DEGREES 57 MINUTES 04 SECONDS EAST.

N
W E
S

GRAPHIC SCALE
100 0 50 100 200
(IN FEET)
1 inch = 100 ft.

ANDERSON LAND SURVEYING
3199-345th Avenue Northeast
Cambridge, Minnesota 55008

City of North Branch
Staff Report

Prepared By: Matthew Hill, City Administrator

Presenter: Matthew Hill, City Administrator

Date: 05/06/2025

Board & Commission: City Council

Subject: Consider Council appointments to Commissions and Advisory Committees

---

Background:
At the first meeting of the calendar year, the City Council members work together to identify the placement of the members on the various Advisory Committees and Commissions. As we have had two members resign from the City Council in the last two months, we need to re-evaluate the appointments and make sure that the positions are being filled.
I have attached two documents to this action item.
1. Blank page for Fiscal Year 2025 appointments and designations.
2. Previous appointments prior to resignations.

Action requested:
Work together to identify and fill liaison appointments.

Voting Requirements:

Voting Options **Simple Majority**

EXHIBIT A

FISCAL YEAR 2025
APPOINTMENTS & DESIGNATIONS

	Council Appointments	Primary Liaison	Alternate Liaison
1	Acting Mayor		
2	Public Works Advisory Committee (2)		
3	Finance Advisory Committee (2)		
4	Personnel Advisory Committee (2)		
5	Public Safety (PD, Fire, Fire Relief) (2)		
6	Parks, Trails & Open Space (1)		
7	Economic Development Authority (2)		
8	Planning (1)		
9	Liquor Advisory Committee (2)		
10	ARPA Advisory Team		

	Community Appointments	Primary Liaison	Alternate Liaison
11	Cable TV Board / ECCC		
12	Community Education/ School Liaison		
13	ECRDC Region 7E (1)		
14	Rushline		

	Contract Services	Designations
15	Insurance Agent	Marsh & McLennan Agency LLC
16	City Attorney	Flaherty & Hood
17	City Engineer	WSB & Associates
18	City Auditor	Abdo
19	City Newspaper	Isanti-Chisago County Star

FISCAL YEAR 2025
APPOINTMENTS & DESIGNATIONS

	Council Appointments	Primary Liaison	Alternate Liaison
1	Acting Mayor	Canada	
2	Public Works Advisory Committee (2)	Goulet/Schaps	
3	Finance Advisory Committee (2)	Goulet/Schaps	
4	Personnel Advisory Committee (2)	Schieber/Canada	
5	Public Safety (PD, Fire, Fire Relief) (2)	Miles/Canada	
6	Parks, Trails & Open Space (1)	Schieber	Canada
7	Economic Development Authority (2)	Schaps/Schieber	
8	Planning (1)	Miles	Canada
9	Liquor Advisory Committee (2)	Miles/Goulet	
10	ARPA Advisory Team	Goulet	

	Community Appointments	Primary Liaison	Alternate Liaison
11	Cable TV Board / ECCC	Miles	
12	Community Education/ School Liaison	Miles	
13	ECRDC Region 7E (1)	Schieber	
14	Rushline	Canada	Schieber

	Contract Services	Designations
15	Insurance Agent	Marsh & McLennan Agency LLC
16	City Attorney	Flaherty & Hood
17	City Engineer	WSB & Associates
18	City Auditor	Abdo
19	City Newspaper	Isanti-Chisago County Star

City of North Branch
Staff Report

Prepared By: Nathan Sondrol, Community Development Director

Presenter: Nathan Sondrol, Community Development Director

Date: 05/07/2025

Board & Commission: City Council

Subject: Consider Ordinance 393-2025 for a zoning text amendment to allow single-family homes as a permitted use in the R-3 Zoning District.

Applicants Request

1. Text Amendment for Section 66-6, Zoning Districts-Use Table; R3 Dwelling, Single-Family change to permitted use.
2. Preliminary plat approval for Cedar Ridge Community

Overview / Background

There are two parts to this application, one being a zoning text amendment and the other a preliminary plat review. The text amendment is being processed to address the ambiguity in the current ordinance relating to R3 uses. The land use table specifically omits single family dwellings from the R3 zoning district, while the Dimensional and Design Standards Table specifically includes small detached single family lot dimensional requirements. The Commission and Council should determine if single family is an appropriate use in the R3 zoning district given that the district is a high density residential district and single family, typically a low density use, may not be appropriate. As currently provided, the dimensional standards for the R3 are not traditional standards and permit small lots of 50' in width and a minimum lot size of 6500 square feet.

The 62 acre parcel is being subdivided to create 75 small lot single family home sites, 3 lots for future apartment development (167 units in total), and 7 outlots which will be for future commercial development or stormwater ponding depending upon the location of the parcel.

At present the applicant is proposing construction of the single family homes with necessary infrastructure. Phase I also includes some apartment buildings however, little information is available for that portion of the project. To the east, Outlots E and F will be replatted for

commercial development. There is no information available about lot layout or future users. The main access into the site is through the extension of 381st Lane which will provide access to all apartments and the commercial lots as well as single family units. The other western access is 382nd Drive turning into Falk Avenue which winds through the project providing access to individual lots and functioning like a neighborhood collector road. Two cul de sacs, Fallcrest Court and Farnham Court, also provide access for individual single family lots. Tanger Drive right of way is being provided; running along the eastern edge of the site to provide a southward road extension which will function as a frontage road for the commercial along I-35. There is a curve in the road in the north, to bypass an existing wetland.

There are a variety of issues associated with the project which are enumerated in the information below. One of the main concerns of staff is the areas not being developed as single family. It is unclear what the final product will be on these sites and if the platted properties can adequately accommodate needed parking and building area while meeting setbacks, open space and other performance standards.

Attachments

Issue(s) to Consider

1. Zoning Ordinance Text Amendment
2. Land Use and Zoning
3. Development Plan
4. Plat Standards

Analysis of Issue(s)

1. **Zoning Ordinance Text Amendment**

The Commission and Council are being asked to amend the zoning ordinance to address an inconsistency between the various sections of the Code. In the zoning Districts Use Table Section 6-66, under the Dwelling, Single Family row there is nothing listed in the R3 zoning district, meaning it is not permitted. The Dimensional & Design Standards Table provides regulations for R-3 detached single family, implying this use is permitted by ordinance. To accommodate the higher density uses of the R-3 zoning, the table allows for small lot single family, whereas the lot width is a minimum of 50 feet and the lot dept is 100 feet and the minimum lot size is 6,500 square feet, a little over half the size of R-1 single family lots.

Staff is looking for direction from the Commission and Council on this question. If it is determined that the R-3 should not allow single family detached lots as one of the unit types, the project could not be approved. If the Commission and Council determine that the R-3 zoning district is an appropriate location for small lot single family, the project could continue to move forward, pending successfully addressing all project issues.

In the recent past, the City Council has expressed some concern about small lot single family development, particularly when achieved through a PUD. Use of the R-3 to permit some small lot development may allow higher density, without requiring only apartments. Further, this may be a solution to direct future developers to the R-3 district for smaller lots rather than granting modifications to detached single family lots in the R-1 or R-2 zoning districts.

2. **Land Use & Zoning**

The adopted Comprehensive Plan designates the site into two different land uses. The eastern section of the site is designated LUB-Business with the western section designed LUR-3 High Density Residential. The High Density Residential designation is for development of over 6 dwelling units per acre. In order to achieve the required density, the property must combine the proposed single family development with a higher density product, like the anticipated apartment buildings.

The zoning map is similar in the split of the two land uses with Business in the east, along I-35 and R-3 High Density Residential in the west. The map defines a line between the two uses although it is unclear if the exact location of the land use split must define the change between residential and commercial uses. Below is an overlay of the zoning map on the site. It shows that a portion of the commercial zoning overlaps the single family on the north and also includes portions of the drainage pond needed for the residential development.

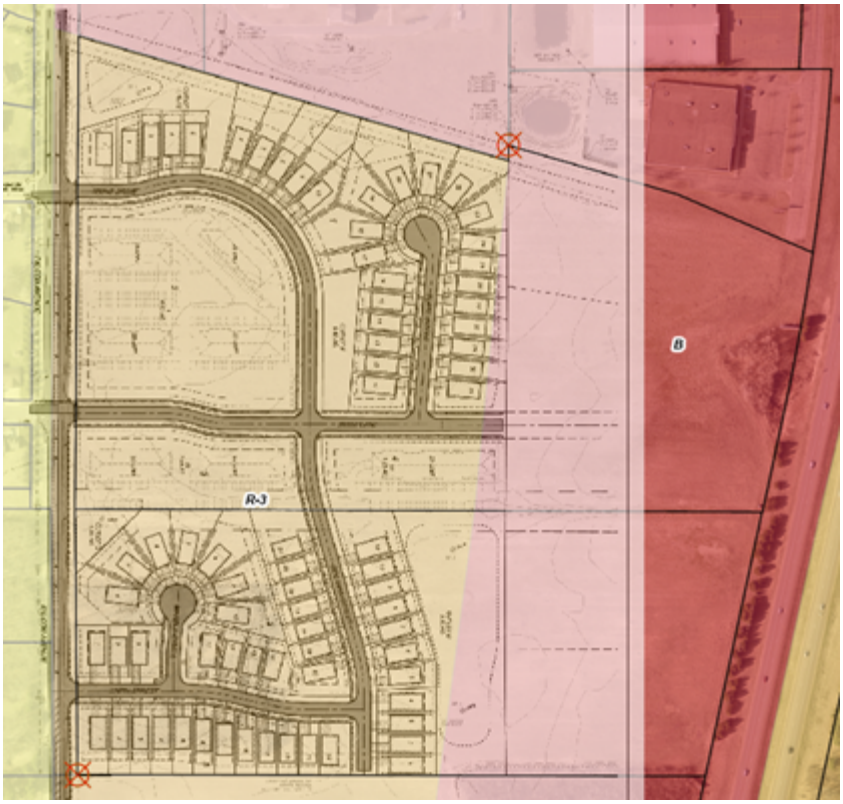

Generally, staff wants to ensure that the amount of land available for commercial is reasonably sized and has dimensional attributes that can accommodate future commercial development without the need of variance. For that reason, staff had requested, and not received, a concept plan which could illustrate a reasonably size non-residential use on the approximate 21 acres designated for commercial development.

3. **Development Overview**

General Plan

The project is comprised of three different land uses. There is the 75 detached single family development located within the R3 zoned area. Many of the lots are located in the western portion of the site with some adjacent to Falcon Avenue, a busy Major Collector road. There is ponding in the northwest also adjacent to Falcon Avenue providing some separation from the traffic, and there is additional pond in the southern single family neighborhood also against the road. It appears that the building pad sites are at a similar elevation to Falcon Avenue meaning there is little ability to create a berm for buffering. The lots immediately adjacent to Falcon Avenue do have larger setbacks, increasing the separation between the road and the building footprint. The landscape plans illustrate more trees along Falcon Avenue providing some screening and it is recommended substantially more plantings be added. For example, Lot 1 Block 5 has 4 trees which equates to 1 tree every 43’ along the side of the lot.

The second land use type is multi-family apartments. The applicant illustrates a total of 167 apartment dwelling units within seven different buildings. There are two located south and west of Falk Avenue and 381st Lane and one 30 unit building east of Falk Avenue. There are an additional four buildings located in the space between Falcon Avenue and the ring road of 382nd Drive. Aside from the building outline and parking lots the applicant has not provided any information about the apartment buildings or landscaping. Any approval for this project would not include formal approval of the apartments and additional applications will be required in the future. However, residents should expect multi-family development in these area. The density for this apartment portion of the project is 16.2 units/acre (167 units/10.3 acres). The total density for the residential portion of the site is 6.29 units/acre, slightly over the "6 and above" density standard.

The third land use is designated for business and commercial uses, consistent with other uses anticipated along I-35, a high traffic and visibility corridor. Aside from the dedication of the Tanger Road right of way and the recognition that 381st Lane will provide access into the commercial area there is little known. The site is a commercial area comprised of outlots E and F which total approximately 21 acres. The calculation has not been updated since the dedication of right of way on the plat and the applicant should correct the lot area table.

Parking

City Code §125-86 requires a minimum of two (2) parking spaces per dwelling unit, each of which are enclosed in attached garages. The single family units will meet this requirement.

For the apartment buildings there is surface parking provided. The total number of outdoor stalls provided are 348, which is slightly over 2 stalls per dwelling unit. Additionally, there will be underground parking although it is unclear the number of stalls available. The ordinance requires 2 free parking stalls per apartment unit. Final parking numbers will need to be provided as part of any site plan review for the apartments.

Design Elements (Façade Materials)

The applicant has not provided any information regarding the single family detached housing nor architectural information for the apartment buildings.

Landscape & Tree Preservation Plan

The applicant has provided a tree preservation plan which depicts the area of existing vegetation, located in the south, adjacent to Falcon Avenue, along the southern lot line on the commercial property. The plans indicate all but 1% of the total 4.17 treed acres are being removed. The only area preserved is along the southern border of the site, adjacent to a ponding area. The ordinance permits up to 50% tree removal for development and therefore the applicant is required to provide 182 new trees. The applicants proposal includes installation of 139 new trees within the residential areas of the site, generally on the perimeter of development. Staff would have preferred the applicant make a more concerted effort to maintain some of the existing trees. This is an attractive section of the site and new development could benefit from maintaining some of the existing vegetation.

Landscaping for the residential project requires a minimum of one tree per dwelling unit. Therefore 242 trees are required on the site along with the 182 replacement trees due to the removal of most site vegetation. In total the developer should be installing 424 new trees. The landscape plan show a total of 139 trees on the entire residential portion of the property which is unacceptable. The plans have little landscaping around any of the apartment buildings and additional plantings should occur along Falcon Avenue. Plantings should also be added around some of the ponding areas and there is the opportunity to create a landscape buffer between the residential portion of the site and the future commercial development. A revised landscape plan would be a condition of approval.

Project Phasing

The applicant has provided a phasing plan which indicates that Phase I includes 381st Lane and land to the north. This would mean that 31 single family homes would be in the first phase along with the 97 apartment units in 4 buildings. The ponding area in Outlot D will also be constructed. As noted above, there is not enough information to grant approvals of the apartment portion of the project and therefore additional city review will be needed to implement the first phase. The second phase would result in the remaining 44 single family units and 70 apartment units in 3 buildings. There is no phasing attributable to the commercial sites.

Access

All roadways through the Development are public streets, which are designed to standard street widths and rights of way, per the City's engineering and design standards. There are no required or proposed parking restrictions on the City streets at this time.

As noted, the primary access to the site is from 381st Lane, which will also provide access from the west to the new commercial area. This means that the roadway will have more traffic than would be anticipated for a typical residential street. The presence of the apartments, and the commercial, along with several of the single family lots, makes this road function more like a major collector. In discussions with the City Engineer, the proposed sizing and configuration of the road should serve anticipated traffic. If the traffic continues to increase, the city could prohibit parking along the road. Future residents should understand that this road will be extended into the adjoining commercial area. A sign noting the future extension should be placed at the end of the roadway. A cul de sac turnaround is required as part of that road construction.

The placement of the four roads into the site are based somewhat on existing conditions. The two northern roads, 381st Lane and 382nd Drive each form a 4-way intersection with the two existing roads across Falcon Avenue. The most southern road is not aligned with any existing road. In the east, Tanger Drive is set to the property line, and the proposal extends the road southward, consistent with the City's Transportation Plan. The road will act as a frontage road for the commercial businesses fronting along I-35. As presently proposed the horizontal curve proposed does not appear to meet State Aid standards and will need to be modified. Staff recognizes that the curve in the road is to address the existing wetlands, but Tanger Drive will be on the State Aid system and will need to meet State and City design criteria. Wetland impacts may be necessary to meet the design standards, recognizing the current terminus of the road in the north. The County, and the City concurs, that turn lanes are required at the entrances to the site. These should be shown on the final plans and approved by Chisago County and the City.

Of final note is the extension of Falk Ave along the southern border of the site. The plan shows the roadway pavement stopping short of the property line. The pavement should be extended to the lot line, and a temporary cul de sac be installed which will impact the buildability of the most southern lots.

Trails and Sidewalks

Sidewalks are proposed on both sides of 381st Lane and on one side of the ring road through the project and along both of the cul de sacs. There will also be a trail installed along Falcon Avenue at the applicants expense. The County noted that the pedestrian crossings at Falcon Avenue are not shown.

Wetlands

There was a previous wetland delineation done on the site which showed wetlands in the east, which would be impacted by the extension of Tanger Drive. A recent Delineation Report from 2024, found that the northern wetland continues to remain and is approximately 1.25 acres. The other previously designated wetlands did not meet all three characteristics of wetlands and have been removed from the wetland survey.

Utilities and Site Grading

The applicant has been working with the City Engineer on site utilities and grading. The Engineer has indicated most of the comments have been addressed although final plans have not been submitted. Final plans would occur during the final plat review process.

Signage

The applicant has not provided any signage information for the subdivision. Any future signage must comply with the ordinance and the applicant will need to obtain a sign permit.

Parks, Trails and Open Space

The Parks, Trails and Open Space Commission will review this at their May 5, 2025 meeting and their recommendation will be provided at the meeting.

4. **Plat Standards**

The developer appears to be meeting the R-3 detached single family dimensional standards found in the Dimensional & Design Standards Table. The applicant should provide information about each of the lot widths, and lot depths. No variances were requested, and it is not anticipated that any would be granted for the project, either for individual lots or for future construction.

Lot			Setbacks					
Width/ft	Depth/ft	Area/sf	Front/fs	Side/ft	Rear corner/ft	Rear/ft	Height/ft	Min. Bldg. size

R3	50	100	6,500	30	6	15	30	35	800 sq ft

Staff Recommendation

1. Staff requests the City Council to provide direction regarding the zoning ordinance language relating to single family development in the R3 zoning district.

2. Staff has identified several issues which should be addressed by the applicant prior to granting any approvals. Staff is recommending the application be continued to permit the applicant time to address the following issues:

1. Modify the landscape plan to significantly increase the plantings, including trees, shrubs, and grasses.
2. Provide information regarding the apartment project including building elevations, and detailed site plan information to ensure future development can comply with ordinance performance standards.
3. The applicant revise the Tanger Drive alignment to meet State Aid roadway design standards.
4. The applicant update lot information to, including lot width and depth of each single family lot and final parcel size of outlots E and F.
5. The applicant provide a cul de sac at the end of Obsidian Street and adjust the preliminary plat accordingly.
6. There are outstanding engineering items that have not been fully addressed from the City Engineers memo.

Planning Commission Recommendation

The Planning Commission held the public hearing on May 6, 2025 and received public testimony relating to proposed text amendment allowing single family homes in the R3 zoning district and the Cedar Ridge Preliminary Plat.

The Planning Commission made the following recommendations:

Text Amendment to allow single family homes as a permitted use in the R3 Zoning District

Item 1) Text Amendment to allow Single Family Homes in the R3 Zoning District

Motion to the City Council to recommend denial to the Text Amendment to Chapter 66-6 Permitted Uses to allow single family homes as a permitted use in the R3 Zoning District with the following findings of fact.

1. The use of single family homes is not following the guidance of the Comprehensive Plan if the zoning is not permitted.
2. This would open allow of the R3 zoning districts to allow for single-family homes

Item 2) Cedar Ridge Preliminary Plat

Motion to the City Council to recommend denial to the Cedar Ridge Preliminary Plat with the following findings of fact.

1. The preliminary plat does not meet the zoning district requirements.
2. The preliminary plat is not consistent with the comprehensive plan.

Requested Action

The City Council shall take one of the following actions:

1. Recommend the approval of the text ordinance amendment to allow single-family homes in the R3 Zoning District
2. Recommend the denial of the text ordinance amendment to allow single-family homes in the R3 Zoning District
3. Request the applicant provide an extension of the request.

Attachments

1. Preliminary Plat Dated 04-24-2025
2. Civil Plans Dated 04-24-2025

Voting Requirements:

Voting Options **Simple Majority**

Preliminary Plat of CEDAR RIDGE COMMUNITY

CITY OF NORTH BRANCH
CHISAGO COUNTY, MN

SOILS CHART

Map symbol & soil name	Hydrologic group	Water table depth (in)
676B: Kost loamy fine sand, 1 to 6 percent slopes	A	>80
328B: Sartell fine sand, 1 to 6 percent slopes	A	>80
161: Isanti loamy fine sand	A/D	>80
162: Lino loamy fine sand	A/D	12

* Data from USDA Web Soil Survey

SOIL BORING LOG Matthew J. Blesi – MPCA Cert. No. C4952

Soil Boring #	Elevation	Mottling	Elev. of Mottled Soil
Soil Boring 1	1065.2	None to 156"	N/A
Soil Boring 2	1064.5	None to 111"	N/A
Soil Boring 3	1065.2	None to 150"	N/A
Soil Boring 4	1064.5	None to 128"	N/A

Proposed Plat Description:
Outlot C and Outlot D, NORTH BRANCH MEADOWS, Chisago County, Minnesota.

Survey Notes:

1. *This survey was performed without the benefit of an updated title report. No additional search for restrictions or easements was made by the surveyor. We reserve the right to update this survey upon receipt of updated title documentation. Reference Title Commitment No. MN22255 dated 12–14–21.*
2. *Portions of woods edge and field edge were digitized from Autodesk Civil 3D 2020 online aerial imagery and are for reference purposes only.*
3. *Utilities shown per Gopher State One Call Ticket No. 220530468 and 250220710. Not all utilities may have been located. Multiple tickets failed to result in the East Central Energy transmission line being marked.*
4. *Contours were created using GPS RTK methods (NAVD 88).*
5. *Subject property is NOT part of a shoreland district or within a flood plain district as mapped by FEMA.*
6. *Topography and site improvements were collected 3/7/22.*
7. *Wetlands were previously delineated by Midwest Natural Resources, Inc. in 2018 for the plat of NORTH BRANCH MEADOWS and are shown hereon. A more recent delineation was completed by Bogart, Pederson and Assocaites, Inc. on 10/17/24.*
8. *There is an existing underground electric transmission line currently owned by East Central Energy that follows the general path of the overhead power line along the common line of Outlots C and D of NORTH BRANCH MEADOWS. The overhead power lines are owned by Southern Municipal Power Agency. The power lines existed on the date of the plat recording, but no easement was dedicated. We have tried to contact the Southern Minnesota Municipal Power Agency for a partial release, but have not received a response.*
9. *East Central Energy's underground transmission line may be impacted by the proposed infiltration basin and may need to be consulted with East Central Energy.*

I hereby certify that a boundary survey has been completed for the preliminary plat of CEDAR RIDGE COMMUNITY, Chisago County, Minnesota.

Signed: Craig Wensmann
Craig A. Wensmann
Date: 1/14/25 Lic. No. 47466

LINE	BEARING	DISTANCE
L1	S76°35'28"E	78.76

CURVE	RADIUS	DISTANCE	DELTA
C1	500.00	41.37	4°44'26"

LOT AREAS

Block	Lot	Total Lot Area (S.F.)	Block	Lot	Total Lot Area (S.F.)	Block	Lot	Total Lot Area (S.F.)	Block	Lot	Total Lot Area (S.F.)
1	1	12,833	1	20	21,507	3	7	14,022	4	4	8,567
1	2	9,038	1	21	14,351	3	8	17,095	4	5	9,042
1	3	7,998	1	22	16,415	3	9	13,794	4	6	8,960
1	4	7,436	1	23	13,515	3	10	14,502	4	7	7,910
1	5	7,916	1	24	8,249	3	11	10,950	4	8	7,538
1	6	14,965	1	25	7,891	3	12	7,374	4	9	7,538
1	7	14,622	1	26	8,071	3	13	6,760	4	10	7,539
1	8	16,240	1	27	8,289	3	14	9,331	4	11	17,825
1	9	17,979	1	28	8,507	3	15	12,660	4	12	80,409
1	10	12,094	1	29	8,726	3	16	6,956	5	1	13,646
1	11	12,775	1	30	8,944	3	17	6,760	5	2	9,100
1	12	7,384	1	31	14,124	3	18	6,760	5	3	9,100
1	13	7,384	2	1	262,045	3	19	6,760	5	4	9,100
1	14	7,384	3	1	10,104	3	20	6,760	5	5	9,098
1	15	7,384	3	2	6,760	3	21	15,980	5	6	8,986
1	16	9,122	3	3	10,188	3	22	106,428	5	7	8,583
1	17	12,242	3	4	22,714	4	1	7,540	5	8	7,966
1	18	18,519	3	5	13,274	4	2	7,540	5	9	7,348
1	19	14,682	3	6	14,011	4	3	7,540	5	10	6,926
Outlot E		925,504	Outlot C		13,319	Outlot A		60,907	5	11	6,769
			Outlot D		131,699	Outlot B		27,216	5	12	10,010

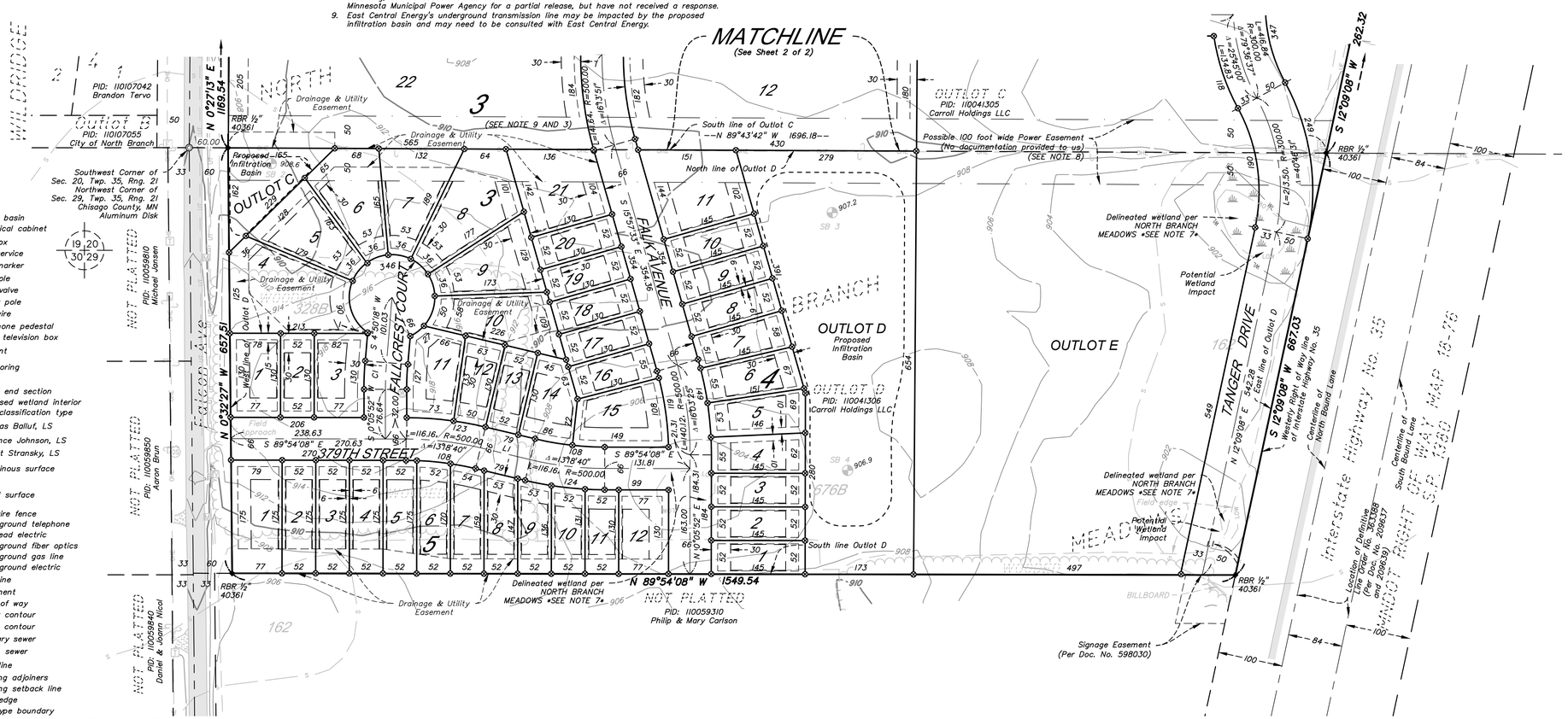

LEGEND:

- Denotes catch basin
- Denotes electrical cabinet
- Denotes mailbox
- Denotes gas service
- Denotes gas marker
- Denotes manhole
- Denotes watervalve
- Denotes power pole
- Denotes guy wire
- Denotes telephone pedestal
- Denotes cable television box
- Denotes hydrant
- Denotes soil boring
- Denotes well
- Denotes flared end section
- Denotes proposed wetland interior
- Denotes soils classification type
- LS 40361 — Denotes Thomas Balluf, LS
- LS 13115 — Denotes Terrance Johnson, LS
- LS 14945 — Denotes Robert Stransky, LS
- Denotes bituminous surface
- Denotes gravel surface
- Denotes barbwire fence
- Denotes underground telephone
- Denotes overhead electric
- Denotes underground fiber optics
- Denotes underground gas line
- Denotes underground electric
- Denotes tree line
- Denotes easement
- Denotes right of way
- Denotes major contour
- Denotes minor contour
- Denotes sanitary sewer
- Denotes storm sewer
- Denotes waterline
- Denotes existing adjoiners
- Denotes building setback line
- Denotes field edge
- Denotes soil type boundary
- Denotes delineated wetland per NORTH BRANCH MEADOWS
- Denotes proposed wetland edge

VICINITY MAP
Sec. 20 & 29, Twp. 35, Rng. 21
Chisago County, MN

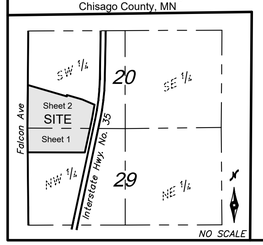

Bearings are based on the plat of NORTH BRANCH MEADOWS

- ● Denotes found iron monument
- ⊗ Denotes ½ inch by 14 inch iron monument with a plastic plug stamped R.L.S. 47466 to be set within one year of platting date
- ◆ Denotes found rebar
- ◎ Denotes found metal disk
- ○ Denotes set ½ inch by 14 inch iron monument with a plastic plug stamped R.L.S. 47466
- △ Denotes found large nail

REFERENCE BENCHMARK:
MNDOT Geodetic Monument "DANY"
Elevation = 897.37 feet (NAVD 88)

PLAT BENCHMARK:
Top nut hydrant in the NW quad of Falcon Ave. and 382nd Drive
Elevation = 915.28 feet (NAVD 88)

OWNER:
Carroll Holdings, LLC
33098 Marmon St. NE
Cambridge MN, 55008

DEVELOPER:
Cedar Ridge Community LLC
12222 313th Avenue,
Princeton, MN 55371
(763) 360–1453

SURVEYORS & ENGINEERS:
Bogart, Pederson & Associates, Inc.
13076 First Street
Becker, MN 55308–9322
763–262–8822

TOTAL AREA: 62.03± Acres

EXISTING ZONING:
R–3 High Density Residential
B – Business

PROPOSED ZONING:
R–3 High Density Residential (Residential Lots)
B – Business (Outlots)

MINIMUMS:
100' Depth
50' Width
6,500 S.F. lot size

DENOTES BUILDING SETBACKS:
Detached Single Family Lots
30' Front
6' Side (Interior)
30' Rear (Interior)
15' Rear (Corner)
30' Front (Corner)
20' Wetland

Drainage and Utility Easements are shown thus:

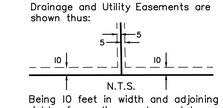

Being 10 feet in width and adjoining right–of–way lines and rear lot lines, also being 5 feet in width and adjoining lot lines, unless otherwise indicated, as shown on plat.

DATE: 1/10/25
FIELD DATE: March, 7th 2022
BK/PG: 13.1/pg. 1
DRAWN BY: CK
CHECKED BY: CAW/DJJ
DWG FILE: 22–0030.02 Prelim
FILE NO: 22–0030.02

REVISIONS:
3/31/25: City Comments
4/24/25: City Comments

I hereby certify that this survey, plan, or report was prepared by me or under my direct supervision and that I am a duly Licensed Land Surveyor under the laws of the State of Minnesota.

Signed: Craig Wensmann
Craig A. Wensmann
Date: 1/14/25 Lic. No. 47466

BOGART, PEDERSON & ASSOCIATES, INC.
LAND SURVEYING
CIVIL ENGINEERING
MAPPING
13076 FIRST STREET, BECKER, MN 55308–9322
TEL: 763–262–8822 FAX: 763–262–8844

PRELIMINARY PLAT
for
CEDAR RIDGE COMMUNITY
Cedar Ridge Community LLC
City of North Branch
Chisago County, MN

BOGART, PEDERSON & ASSOCIATES, INC.

Preliminary Plat of CEDAR RIDGE COMMUNITY

CITY OF NORTH BRANCH
CHISAGO COUNTY, MN

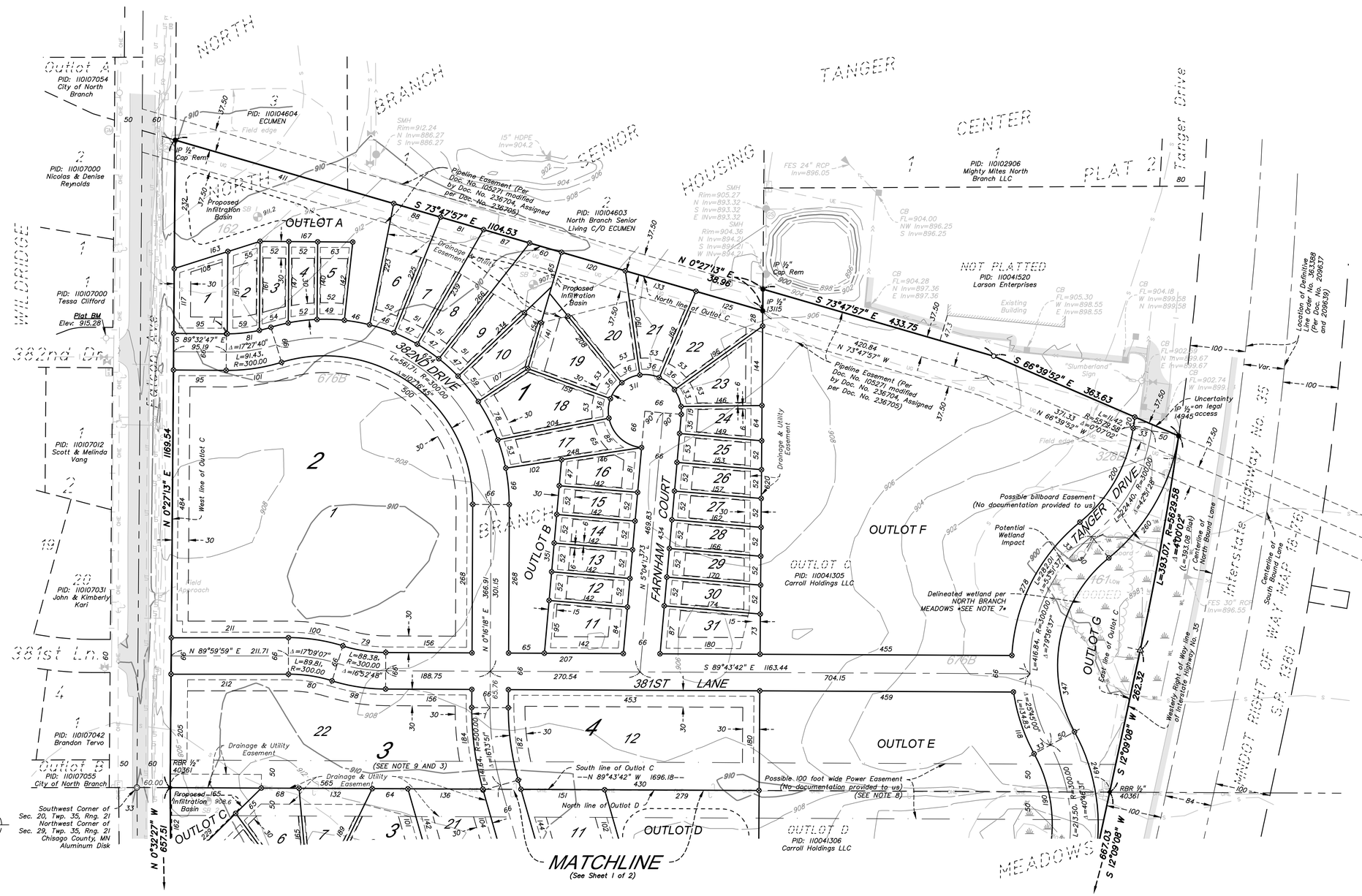

VICINITY MAP

Sec. 20 & 29, Twp. 35, Rng. 21
Chisago County, MN

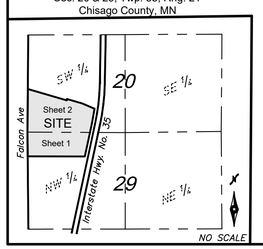

LEGEND:

- Denotes catch basin
- Denotes electrical cabinet
- Denotes mailbox
- Denotes gas service
- Denotes gas marker
- Denotes manhole
- Denotes watervalve
- Denotes power pole
- Denotes guy wire
- Denotes telephone pedestal
- Denotes cable television box
- Denotes hydrant
- Denotes soil boring
- Denotes well
- Denotes flared end section
- Denotes proposed wetland interior
- Ys — Denotes soils classification type
- LS 40361 — Denotes Thomas Balluf, LS
- LS 13115 — Denotes Terrance Johnson, LS
- LS 14945 — Denotes Robert Stransky, LS
- Denotes bituminous surface
- Denotes gravel surface
- X — Denotes barbwire fence
- UT — Denotes underground telephone
- OHE — Denotes overhead electric
- FO — Denotes underground fiber optics
- UG — Denotes underground gas line
- Denotes easement
- Denotes right of way
- Denotes major contour
- Denotes minor contour
- Denotes sanitary sewer
- Denotes storm sewer
- Denotes waterline
- Denotes existing adjoiners
- Denotes building setback line
- Denotes field edge
- S — Denotes soil type boundary
- LOW — Denotes delineated wetland per NORTH BRANCH MEADOWS
- WL — Denotes proposed wetland edge
- UE — Denotes underground electric
- Denotes tree line

BOGART, PEDERSON & ASSOCIATES, INC.

Bearings are based on the plat of NORTH BRANCH MEADOWS

- ● Denotes found iron monument
- ⊗ Denotes ½ inch by 14 inch iron monument with a plastic plug stamped R.L.S. 47466 to be set within one year of platting date
- ◆ Denotes found rebar
- ◎ Denotes found metal disk
- ○ Denotes set ½ inch by 14 inch iron monument with a plastic plug stamped R.L.S. 47466
- △ Denotes found large nail

REFERENCE BENCHMARK:
MNDOT Geodetic Monument "DANY"
Elevation = 897.37 feet (NAVD 88)

PLAT BENCHMARK:
Top nut hydrant in the NW quad of Falcon Ave. and 382nd Drive
Elevation = 915.28 feet (NAVD 88)

OWNER:
Carroll Holdings, LLC
33098 Marmon St. NE
Cambridge MN, 55008

DEVELOPER:
Cedar Ridge Community LLC
12222 313th Avenue,
Princeton, MN 55371
(763) 360-1453

SURVEYORS & ENGINEERS:
Bogart, Pederson & Associates, Inc.
13076 First Street
Becker, MN 55308-9322
763-262-8822

TOTAL AREA: 62.03± Acres

EXISTING ZONING:
R-3 High Density Residential
B - Business

PROPOSED ZONING:
R-3 High Density Residential (Residential Lots)
B - Business (Outlots)

MINIMUMS:
100' Depth
50' Width
6,500 S.F. lot size

DENOTES BUILDING SETBACKS:
Detached Single Family Lots
30' Front
6' Side (Interior)
30' Rear (Interior)
15' Rear (Corner)
30' Front (Corner)
20' Wetland

Drainage and Utility Easements are shown thus:

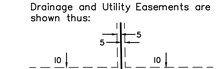

Being 10 feet in width and adjoining right-of-way lines and rear lot lines, also being 5 feet in width and adjoining lot lines, unless otherwise indicated, as shown on plat.

DATE: 1/10/25
FIELD DATE: March, 7th 2022
BK/PG: 13.1/pg. 1
DRAWN BY: CK
CHECKED BY: CAW/DJJ
DWG FILE: 22-0030.02 Prelim
FILE NO: 22-0030.02

REVISIONS:
3/31/25: City Comments
4/24/25: City Comments

I hereby certify that this survey, plan, or report was prepared by me or under my direct supervision and that I am a duly Licensed Land Surveyor under the laws of the State of Minnesota.

Signed: Craig Wensmann
Craig A. Wensmann
Date: 1/14/25 Lic. No. 47466

BOGART, PEDERSON & ASSOCIATES, INC.
LAND SURVEYING
CIVIL ENGINEERING
MAPPING
13076 FIRST STREET, BECKER, MN 55308-9322
TEL: 763-262-8822 FAX: 763-262-8844

PRELIMINARY PLAT
for
CEDAR RIDGE COMMUNITY
Cedar Ridge Community LLC
City of North Branch
Chisago County, MN

CEDAR RIDGE COMMUNITY LLC

CEDAR RIDGE COMMUNITY

FALCON AVE N

CITY OF NORTH BRANCH, CHISAGO COUNTY, MN

APRIL, 2025

PRELIMINARY PLANS

CIVIL & SURVEY PLANS PREPARED BY:

Bogart, Pederson
& Associates, Inc.
CIVIL ENGINEERING
LAND SURVEYING
ENVIRONMENTAL SERVICES
Traditional Values · Creative Solutions

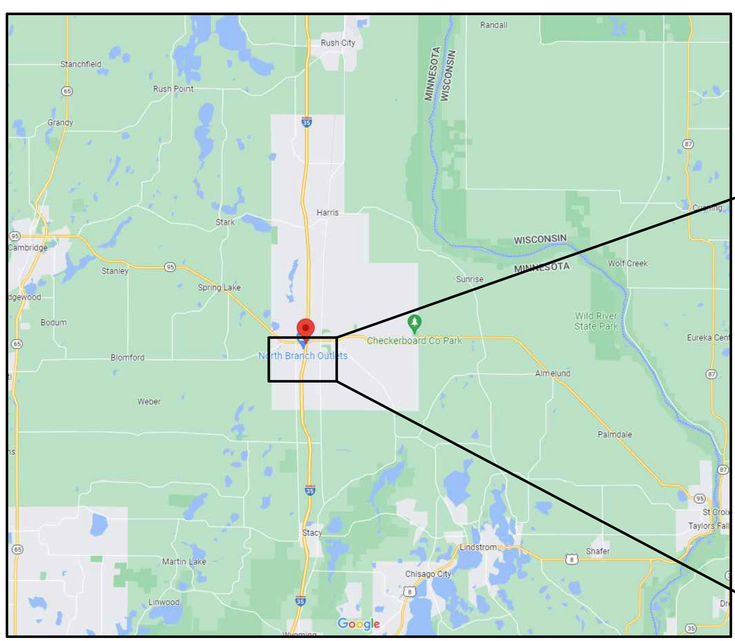

CHISAGO COUNTY, MINNESOTA

PROJECT LOCATION

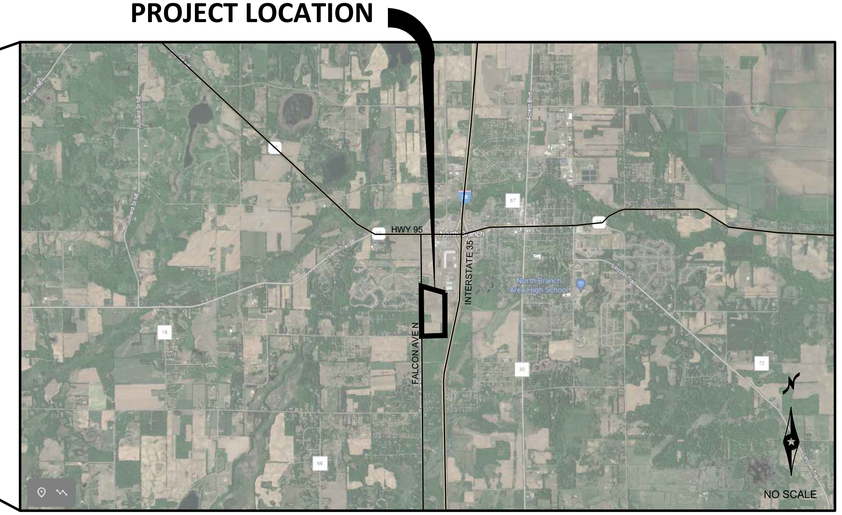

VICINITY MAP

Sheet List Table	
Sheet Number	Sheet Title
C0	Cover
C1.1	Existing Conditions
C1.2	Tree Preservation & Removals
C2.0	Overall Site Plan
C2.1	North Site Plan
C2.2	South Site Plan
C2.3	Future Development
C3.1	North Grading Plan
C3.2	South Grading Plan
C4.1	North Utility Plan
C4.2	South Utility Plan
C5.1	382nd & Falk Ave (Street & Storm)
C5.2	Falk Ave (Street & Storm)
C5.3	381st Lane (Street & Storm)
C5.4	Farnham Ct (Street & Storm)
C5.5	379th Street (Street & Storm)
C5.6	Fallcrest Ct (Street & Storm)
C6.1	382nd & Falk Ave (Sani. & Water)
C6.2	Falk Ave (Sani. & Water)
C6.3	381st Lane (Sani. & Water)
C6.4	Farnham Ct (Sani. & Water)
C6.5	379th Street (Sani. & Water)
C6.6	Fallcrest Ct (Sani. & Water)
C6.7	Falcon Avenue N (Water)
C6.8	Service Information
C7.1	Turn Lane Plan
C7.2	Traffic Control Plan (Turn Lane)
C7.3	Traffic Control Plan (Detour)
C8.1	North Erosion Control Plan
C8.2	South Erosion Control Plan
C8.3	SWPPP Narrative
C9.1	Details
C9.2	Details
C9.3	Details
C9.4	Details
C9.5	Details
C10.1	North Landscape Plan
C10.2	South Landscape Plan

REV NO.	DATE	DESCRIPTION
1	04/01/2025	REVISION PER CITY REVIEW
2	04/24/2025	REVISION PER CITY REVIEW

PRIVATE UTILITIES SHOWN ARE QUALITY LEVEL D.
QUALITY LEVEL D PROVIDES THE MOST BASIC LEVEL OF INFORMATION. IT INVOLVES COLLECTING DATA FROM EXISTING UTILITY RECORDS. RECORDS MAY INCLUDE AS-BUILT DRAWINGS, DISTRIBUTION AND SERVICES MAPS, EXISTING GEOGRAPHIC INFORMATION SYSTEM DATABASES, CONSTRUCTION PLANS, ETC.

N:\Projects-Current\22-0030-02 Bancler North Branch Plat\Civil\CAD Files\NB Cover\SWPPP.dwg
4/24/2025 3:06 PM

LEGEND:

- Denotes catch basin
- Denotes electrical cabinet
- Denotes mailbox
- Denotes gas service
- Denotes gas marker
- Denotes manhole
- Denotes watervalve
- Denotes power pole
- Denotes guy wire
- Denotes telephone pedestal
- Denotes cable television box
- Denotes hydrant
- Denotes soil boring
- Denotes well
- Denotes flared end section
- Denotes proposed wetland interior
- Denotes soils classification type
- LS 40361 — Denotes Thomas Ballul, LS
- LS 13115 — Denotes Terrance Johnson, LS
- LS 14945 — Denotes Robert Stransky, LS
- Denotes bituminous surface
- Denotes gravel surface
- Denotes barbwire fence
- Denotes underground telephone
- Denotes overhead electric
- Denotes underground fiber optics
- Denotes underground gas line
- Denotes easement
- Denotes right of way
- Denotes major contour
- Denotes minor contour
- Denotes sanitary sewer
- Denotes storm sewer
- Denotes waterline
- Denotes existing adjoiners
- Denotes building setback line
- Denotes field edge
- Denotes soil type boundary
- Denotes delineated wetland
- Denotes proposed wetland edge
- Denotes underground electric
- Denotes tree line

See Preliminary Plat, provided by Bogart, Pederson & Associates for more information

CALL 48 HOURS BEFORE DIGGING:
GOPHER STATE ONE CALL
TWIN CITY AREA 651-454-0002
MINNESOTA TOLL FREE 1-800-252-1166

REV NO.	DATE	DESCRIPTION
1	04/01/2025	REVISION PER CITY REVIEW
2	04/24/2025	REVISION PER CITY REVIEW

DATE: 04/24/2025
DESIGN BY: MJM
DRAWN BY: MJM
CHECKED BY: CJD
DWG FILE:
FILE NO.: 22-0030.00

I hereby certify that this plan, specification, or report was prepared by me or under my direct supervision and that I am a duly Licensed Professional Engineer under the laws of the State of Minnesota.

NOT FOR CONSTRUCTION

Signed: Christopher J. Dahn
Date: Lic. No. 58628

BOGART, PEDERSON & ASSOCIATES, INC.
LAND SURVEYING
CIVIL ENGINEERING
ENVIRONMENTAL SERVICES
13076 FIRST STREET, BECKER, MN 55308-9322
TEL: 763-262-9822 FAX: 763-262-9844

CEDAR RIDGE COMMUNITY LLC
CEDAR RIDGE COMMUNITY
City of North Branch, Chisago County, MN

EXISTING CONDITIONS

SHEET NO.
C1.1

4/24/2025 3:06 PM N:\Projects Current\22-0030.02 Bellaire North Branch Plat\Civil\CAD Files\NB Site Existing.dwg

LEGEND:

- REMOVE PAVEMENT SECTION (AS INDICATED).
- REMOVE EXISTING TREES (AS INDICATED)
- REMOVE FEATURE (AS INDICATED)
- SALVAGE (AS INDICATED)
- SAW-CUT

0' 100' 200'
SCALE: 1"=100'

DEMOLITION GENERAL NOTES:

1. IT IS THE RESPONSIBILITY OF THE CONTRACTOR TO PERFORM OR COORDINATE ALL UTILITY CONNECTIONS AND RELOCATIONS FROM EXISTING UTILITY LOCATIONS TO THE PROPOSED BUILDING, AS WELL AS TO ALL ON-SITE AMENITIES. THESE CONNECTIONS INCLUDE BUT ARE NOT LIMITED TO WATER, SANITARY SEWER, UNDERGROUND GAS, ETC.
2. THE CONNECTIONS SHALL BE PERFORMED IN ACCORDANCE WITH STATE AND LOCAL STANDARD SPECIFICATIONS FOR CONSTRUCTION. UTILITY CONNECTIONS (UNDERGROUND GAS, WATERMAIN, AND STORM SEWER) MAY REQUIRE A PERMIT FROM THE CITY.
3. THE CONTRACTOR SHALL VERIFY THE ELEVATIONS AT PROPOSED CONNECTIONS TO EXISTING UTILITIES PRIOR TO ANY DEMOLITION.
4. CONTRACTOR SHALL COORDINATE WITH THE CITY OF NORTH BRANCH FOR ALL UTILITY DISCONNECTIONS, SERVICE TERMINATIONS AND REMOVALS. CONTRACTOR SHALL COORDINATE UTILITY DISCONNECTIONS AND RELOCATIONS WITH THE UTILITY PROVIDERS PRIOR TO THE START OF CONSTRUCTION. ALL SERVICE CONNECTIONS/DISCONNECTIONS SHALL BE PERFORMED IN ACCORDANCE WITH STATE AND LOCAL STANDARD SPECIFICATIONS FOR CONSTRUCTION. CONTRACTOR SHALL OBTAIN ALL NECESSARY STATE AND LOCAL PERMITS NECESSARY FOR UTILITY CONSTRUCTION AND WORK WITHIN ADJACENT RIGHT-OF-WAYS.
5. IF DEWATERING IS REQUIRED FOR THIS PROJECT, THE PUMP DISCHARGE SHALL BE TREATED PRIOR TO BEING DISCHARGED OFF-SITE OR INTO A SURFACE WATER. THE DISCHARGE SHALL BE VISUALLY CHECKED TO ENSURE THAT IT IS VISIBLY CLEAN WATER.
6. CONTRACTOR SHALL PROTECT UTILITIES, STRUCTURES AND TREES (NOTED AND NOT NOTED) TO REMAIN AND SHALL BE RESPONSIBLE TO REPAIR DAMAGES TO ANY FEATURES TO REMAIN.
7. TREES 6" AND LARGER AND OTHER NOTABLE VEGETATION WERE IDENTIFIED AND LOCATED DURING THE COURSE OF THE SURVEY. CONTRACTOR SHALL FIELD VERIFY THE EXISTING CONDITIONS OF THE PROJECT AREA AND REMOVE ALL TREES NOT DESIGNATED TO BE SAVED AND PROTECTED. ALL TREES, DEBRIS, ROOTS, BOULDERS AND TOPSOIL SHALL BE REMOVED FROM THE SITE.

TREE PRESERVATION NOTES:

• TREE REMOVAL AREA:	4.17 ACRES
• TREE PRESERVATION AREA:	0.04 ACRES
• TREE PRESERVATION %:	1%
• 50% OF TREE REMOVAL AREA:	2.08 ACRES
• ASSUMPTIONS FOR REPLACEMENT:	500 S.F. OF COVERAGE PER TREE
• 2.08 ACRES / 500 S.F.	182 TREES TO BE REPLACED

CALL 48 HOURS BEFORE DIGGING:
GOPHER STATE ONE CALL
TWIN CITY AREA 651-454-0002
MINNESOTA TOLL FREE 1-800-252-1166

REV NO.	DATE	DESCRIPTION
1	04/01/2025	REVISION PER CITY REVIEW
2	04/24/2025	REVISION PER CITY REVIEW

DATE: 04/24/2025
DESIGN BY: MJM
DRAWN BY: MJM
CHECKED BY: CJD
DWG FILE: DEMOLITION
FILE NO.: 22-0030.00

I hereby certify that this plan, specification, or report was prepared by me or under my direct supervision and that I am a duly Licensed Professional Engineer under the laws of the State of Minnesota.

NOT FOR CONSTRUCTION

Signed: Christopher J. Dahn
Date: Lic. No. 58628

BOGART, PEDERSON & ASSOCIATES, INC.
LAND SURVEYING
CIVIL ENGINEERING
ENVIRONMENTAL SERVICES
13076 FIRST STREET, BECKER, MN 55308-9322
TEL: 763-262-9622 FAX: 763-262-9644

CEDAR RIDGE COMMUNITY LLC
CEDAR RIDGE COMMUNITY
City of North Branch, Chisago County, MN

TREE PRESERVATION & REMOVALS

SHEET NO.
C1.2

N:\Projects Current\22-0030.02 Belzer North Branch Pine\Civil\CAD Files\NB Tree Preserve.dwg 3:06 PM 4/24/2025

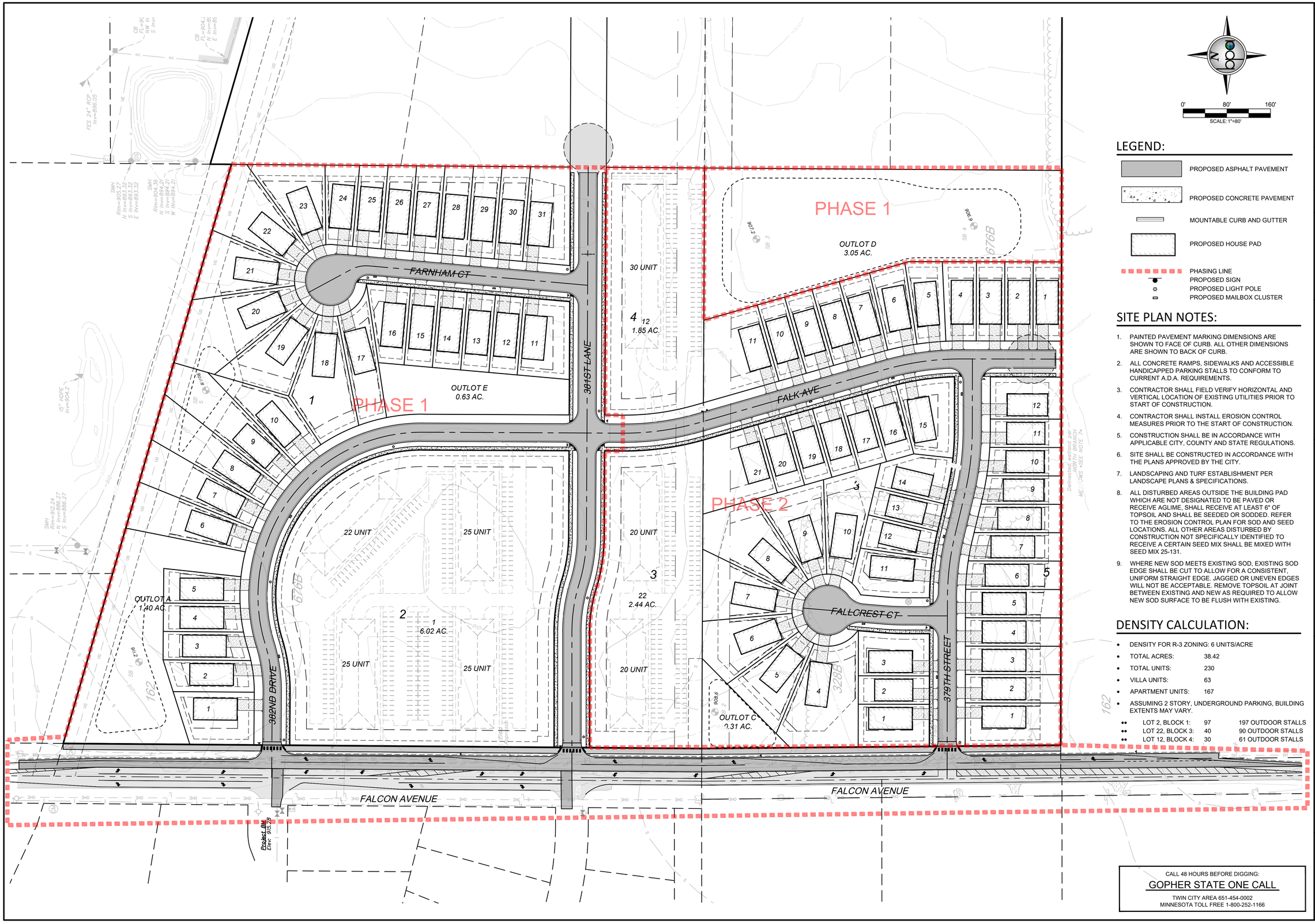

0' 80' 160'
SCALE: 1"=80'

LEGEND:

- PROPOSED ASPHALT PAVEMENT
- PROPOSED CONCRETE PAVEMENT
- MOUNTABLE CURB AND GUTTER
- PROPOSED HOUSE PAD
- PHASING LINE
- PROPOSED SIGN
- PROPOSED LIGHT POLE
- PROPOSED MAILBOX CLUSTER

SITE PLAN NOTES:

1. PAINTED PAVEMENT MARKING DIMENSIONS ARE SHOWN TO FACE OF CURB. ALL OTHER DIMENSIONS ARE SHOWN TO BACK OF CURB.
2. ALL CONCRETE RAMPS, SIDEWALKS AND ACCESSIBLE HANDICAPPED PARKING STALLS TO CONFORM TO CURRENT A.D.A. REQUIREMENTS.
3. CONTRACTOR SHALL FIELD VERIFY HORIZONTAL AND VERTICAL LOCATION OF EXISTING UTILITIES PRIOR TO START OF CONSTRUCTION.
4. CONTRACTOR SHALL INSTALL EROSION CONTROL MEASURES PRIOR TO THE START OF CONSTRUCTION.
5. CONSTRUCTION SHALL BE IN ACCORDANCE WITH APPLICABLE CITY, COUNTY AND STATE REGULATIONS.
6. SITE SHALL BE CONSTRUCTED IN ACCORDANCE WITH THE PLANS APPROVED BY THE CITY.
7. LANDSCAPING AND TURF ESTABLISHMENT PER LANDSCAPE PLANS & SPECIFICATIONS.
8. ALL DISTURBED AREAS OUTSIDE THE BUILDING PAD WHICH ARE NOT DESIGNATED TO BE PAVED OR RECEIVE AGLIME, SHALL RECEIVE AT LEAST 6" OF TOPSOIL AND SHALL BE SEEDED OR SODDED. REFER TO THE EROSION CONTROL PLAN FOR SOD AND SEED LOCATIONS. ALL OTHER AREAS DISTURBED BY CONSTRUCTION NOT SPECIFICALLY IDENTIFIED TO RECEIVE A CERTAIN SEED MIX SHALL BE MIXED WITH SEED MIX 25-131.
9. WHERE NEW SOD MEETS EXISTING SOD, EXISTING SOD EDGE SHALL BE CUT TO ALLOW FOR A CONSISTENT, UNIFORM STRAIGHT EDGE. JAGGED OR UNEVEN EDGES WILL NOT BE ACCEPTABLE. REMOVE TOPSOIL AT JOINT BETWEEN EXISTING AND NEW AS REQUIRED TO ALLOW NEW SOD SURFACE TO BE FLUSH WITH EXISTING.

DENSITY CALCULATION:

- DENSITY FOR R-3 ZONING: 6 UNITS/ACRE
- TOTAL ACRES: 38.42
- TOTAL UNITS: 230
- VILLA UNITS: 63
- APARTMENT UNITS: 167
- ASSUMING 2 STORY, UNDERGROUND PARKING, BUILDING EXTENTS MAY VARY.
  - LOT 2, BLOCK 1: 97 — 197 OUTDOOR STALLS
  - LOT 22, BLOCK 3: 40 — 90 OUTDOOR STALLS
  - LOT 12, BLOCK 4: 30 — 61 OUTDOOR STALLS

CALL 48 HOURS BEFORE DIGGING:
GOPHER STATE ONE CALL
TWIN CITY AREA 651-454-0002
MINNESOTA TOLL FREE 1-800-252-1166

REV NO.	DATE	DESCRIPTION
1	04/01/2025	REVISION PER CITY REVIEW
2	04/24/2025	REVISION PER CITY REVIEW

DATE: 04/24/2025
DESIGN BY: MJM
DRAWN BY: MJM
CHECKED BY: CJD
DWG FILE: SITE BASE
FILE NO.: 22-0030.00

I hereby certify that this plan, specification, or report was prepared by me or under my direct supervision and that I am a duly Licensed Professional Engineer under the laws of the State of Minnesota.

NOT FOR CONSTRUCTION

Signed: Christopher J. Dahn
Date: Lic. No. 58628

BOGART, PEDERSON & ASSOCIATES, INC.
LAND SURVEYING
CIVIL ENGINEERING
ENVIRONMENTAL SERVICES
13079 FIRST STREET, BECKER, MN 55308-9322
TEL. 763-262-9622 FAX. 763-262-9644

CEDAR RIDGE COMMUNITY LLC
CEDAR RIDGE COMMUNITY
City of North Branch, Chisago County, MN

OVERALL SITE PLAN

SHEET NO.
C2.0

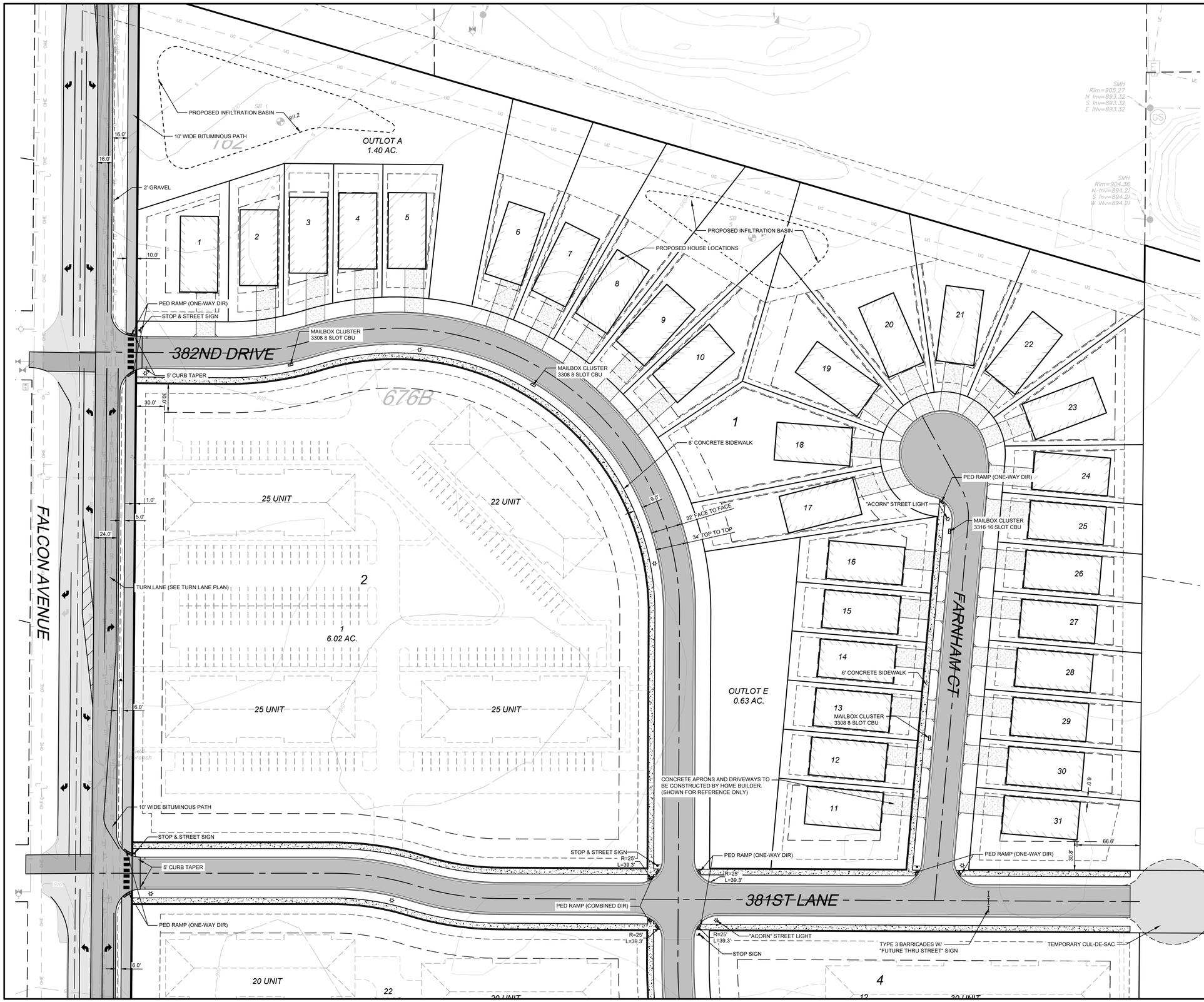

0' 50' 100'
SCALE: 1"=50'

LEGEND:

- PROPOSED ASPHALT PAVEMENT
- PROPOSED CONCRETE PAVEMENT
- MOUNTABLE CURB AND GUTTER
- PROPOSED HOUSE PAD
- PHASING LINE
- PROPOSED SIGN
- PROPOSED LIGHT POLE
- PROPOSED MAILBOX CLUSTER

SITE PLAN NOTES:

1. PAINTED PAVEMENT MARKING DIMENSIONS ARE SHOWN TO FACE OF CURB. ALL OTHER DIMENSIONS ARE SHOWN TO BACK OF CURB.
2. ALL CONCRETE RAMPS, SIDEWALKS AND ACCESSIBLE HANDICAPPED PARKING STALLS TO CONFORM TO CURRENT A.D.A. REQUIREMENTS.
3. CONTRACTOR SHALL FIELD VERIFY HORIZONTAL AND VERTICAL LOCATION OF EXISTING UTILITIES PRIOR TO START OF CONSTRUCTION.
4. CONTRACTOR SHALL INSTALL EROSION CONTROL MEASURES PRIOR TO THE START OF CONSTRUCTION.
5. CONSTRUCTION SHALL BE IN ACCORDANCE WITH APPLICABLE CITY, COUNTY AND STATE REGULATIONS.
6. SITE SHALL BE CONSTRUCTED IN ACCORDANCE WITH THE PLANS APPROVED BY THE CITY.
7. LANDSCAPING AND TURF ESTABLISHMENT PER LANDSCAPE PLANS & SPECIFICATIONS.
8. ALL DISTURBED AREAS OUTSIDE THE BUILDING PAD WHICH ARE NOT DESIGNATED TO BE PAVED OR RECEIVE AGLIME, SHALL RECEIVE AT LEAST 6" OF TOPSOIL AND SHALL BE SEEDED OR SODDED. REFER TO THE EROSION CONTROL PLAN FOR SOD AND SEED LOCATIONS. ALL OTHER AREAS DISTURBED BY CONSTRUCTION NOT SPECIFICALLY IDENTIFIED TO RECEIVE A CERTAIN SEED MIX SHALL BE MIXED WITH SEED MIX 25-131.
9. WHERE NEW SOD MEETS EXISTING SOD, EXISTING SOD EDGE SHALL BE CUT TO ALLOW FOR A CONSISTENT, UNIFORM STRAIGHT EDGE. JAGGED OR UNEVEN EDGES WILL NOT BE ACCEPTABLE. REMOVE TOPSOIL AT JOINT BETWEEN EXISTING AND NEW AS REQUIRED TO ALLOW NEW SOD SURFACE TO BE FLUSH WITH EXISTING.

CALL 48 HOURS BEFORE DIGGING:
GOPHER STATE ONE CALL
TWIN CITY AREA 651-454-0002
MINNESOTA TOLL FREE 1-800-252-1166

REV NO.	DATE	DESCRIPTION
1	04/01/2025	REVISION PER CITY REVIEW
2	04/24/2025	REVISION PER CITY REVIEW

DATE: 04/24/2025
DESIGN BY: MJM
DRAWN BY: MJM
CHECKED BY: CJD
DWG FILE: SITE BASE
FILE NO.: 22-0030.00

I hereby certify that this plan, specification, or report was prepared by me or under my direct supervision and that I am a duly Licensed Professional Engineer under the laws of the State of Minnesota.

NOT FOR CONSTRUCTION

Signed: Christopher J. Dahn
Date: Lic. No. 58628

BOGART, PEDERSON & ASSOCIATES, INC.
LAND SURVEYING
CIVIL ENGINEERING
ENVIRONMENTAL SERVICES
13079 FIRST STREET, BECKER, MN 55308-9322
TEL: 763-262-9822 FAX: 763-262-9844

CEDAR RIDGE COMMUNITY LLC
CEDAR RIDGE COMMUNITY
City of North Branch, Chisago County, MN

NORTH SITE PLAN

SHEET NO.
C2.1

N:\Projects Current\22-0030.00 Belcher North Branch Plat\Civil\CAD Files\NB Site Base.dwg
4/24/2025 3:06 PM

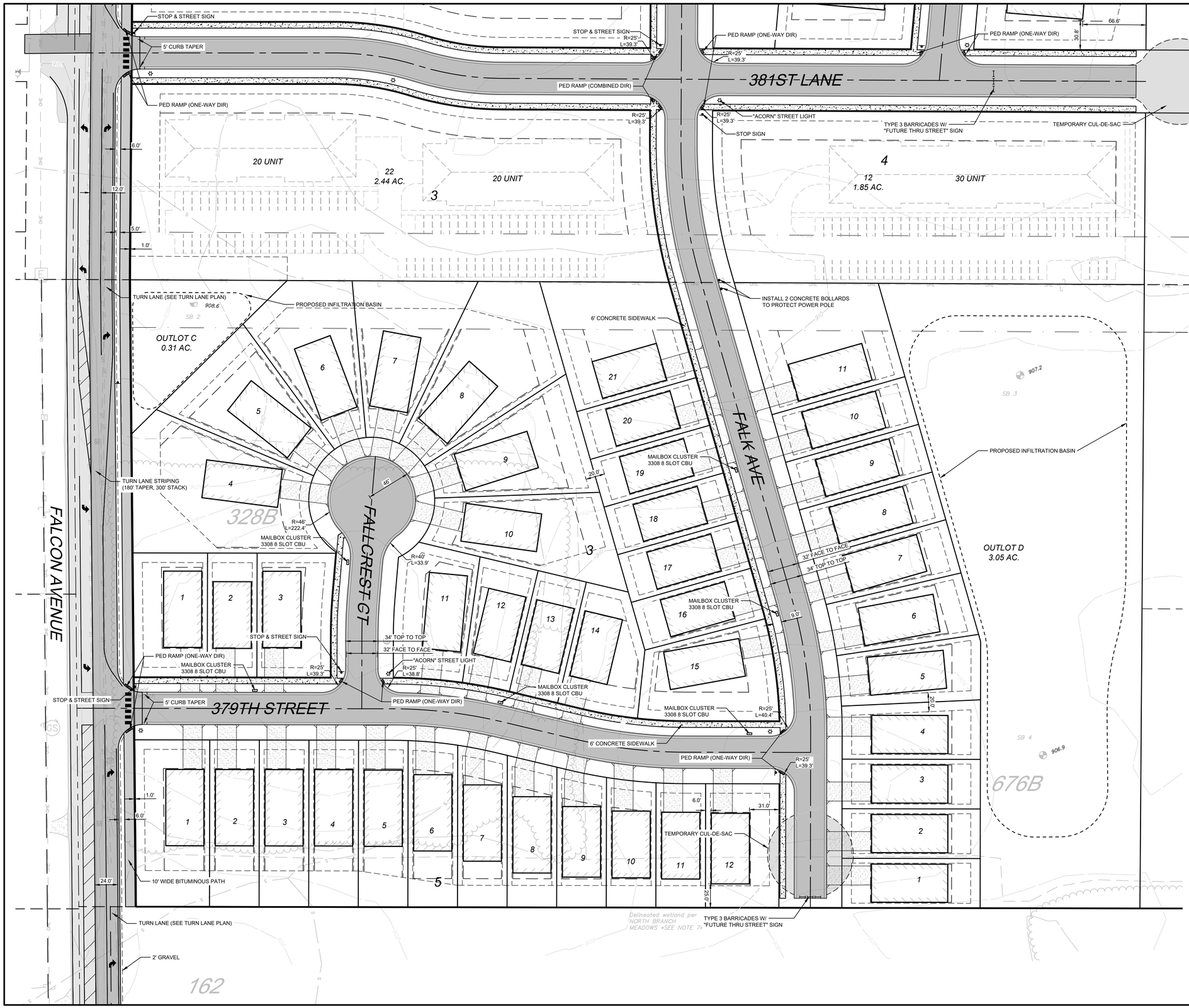

0' 50' 100'
SCALE: 1"=50'

LEGEND:

- PROPOSED ASPHALT PAVEMENT
- PROPOSED CONCRETE PAVEMENT
- MOUNTABLE CURB AND GUTTER
- PROPOSED HOUSE PAD
- PHASING LINE
- PROPOSED SIGN
- PROPOSED LIGHT POLE
- PROPOSED MAILBOX CLUSTER

SITE PLAN NOTES:

1. PAINTED PAVEMENT MARKING DIMENSIONS ARE SHOWN TO FACE OF CURB. ALL OTHER DIMENSIONS ARE SHOWN TO BACK OF CURB.
2. ALL CONCRETE RAMPS, SIDEWALKS AND ACCESSIBLE HANDICAPPED PARKING STALLS TO CONFORM TO CURRENT A.D.A. REQUIREMENTS.
3. CONTRACTOR SHALL FIELD VERIFY HORIZONTAL AND VERTICAL LOCATION OF EXISTING UTILITIES PRIOR TO START OF CONSTRUCTION.
4. CONTRACTOR SHALL INSTALL EROSION CONTROL MEASURES PRIOR TO THE START OF CONSTRUCTION.
5. CONSTRUCTION SHALL BE IN ACCORDANCE WITH APPLICABLE CITY, COUNTY AND STATE REGULATIONS.
6. SITE SHALL BE CONSTRUCTED IN ACCORDANCE WITH THE PLANS APPROVED BY THE CITY.
7. LANDSCAPING AND TURF ESTABLISHMENT PER LANDSCAPE PLANS & SPECIFICATIONS.
8. ALL DISTURBED AREAS OUTSIDE THE BUILDING PAD WHICH ARE NOT DESIGNATED TO BE PAVED OR RECEIVE AGLIME, SHALL RECEIVE AT LEAST 6" OF TOPSOIL AND SHALL BE SEEDED OR SODDED. REFER TO THE EROSION CONTROL PLAN FOR SOD AND SEED LOCATIONS. ALL OTHER AREAS DISTURBED BY CONSTRUCTION NOT SPECIFICALLY IDENTIFIED TO RECEIVE A CERTAIN SEED MIX SHALL BE MIXED WITH SEED MIX 25-131.
9. WHERE NEW SOD MEETS EXISTING SOD, EXISTING SOD EDGE SHALL BE CUT TO ALLOW FOR A CONSISTENT, UNIFORM STRAIGHT EDGE. JAGGED OR UNEVEN EDGES WILL NOT BE ACCEPTABLE. REMOVE TOPSOIL AT JOINT BETWEEN EXISTING AND NEW AS REQUIRED TO ALLOW NEW SOD SURFACE TO BE FLUSH WITH EXISTING.

CALL 48 HOURS BEFORE DIGGING:
GOPHER STATE ONE CALL
TWIN CITY AREA 651-454-0002
MINNESOTA TOLL FREE 1-800-252-1166

REV NO.	DATE	DESCRIPTION
1	04/01/2025	REVISION PER CITY REVIEW
2	04/24/2025	REVISION PER CITY REVIEW

DATE: 04/24/2025
DESIGN BY: MJM
DRAWN BY: MJM
CHECKED BY: CJD
DWG FILE: SITE BASE
FILE NO.: 22-0030.00

I hereby certify that this plan, specification, or report was prepared by me or under my direct supervision and that I am a duly Licensed Professional Engineer under the laws of the State of Minnesota.

NOT FOR CONSTRUCTION

Signed: Christopher J. Dahn
Date: Lic. No. 58628

BOGART, PEDERSON & ASSOCIATES, INC.
LAND SURVEYING
CIVIL ENGINEERING
ENVIRONMENTAL SERVICES
13076 FIRST STREET, BECKER, MN 55308-9322
TEL: 763-262-9322 FAX: 763-262-9344

CEDAR RIDGE COMMUNITY LLC
CEDAR RIDGE COMMUNITY
City of North Branch, Chisago County, MN

SOUTH SITE PLAN

SHEET NO.
C2.2

N:\Projects Current\22-0030.02 Belzer North Branch\PlanCivil\CAD Files\NB Site Base.dwg
4/24/2025 3:06 PM

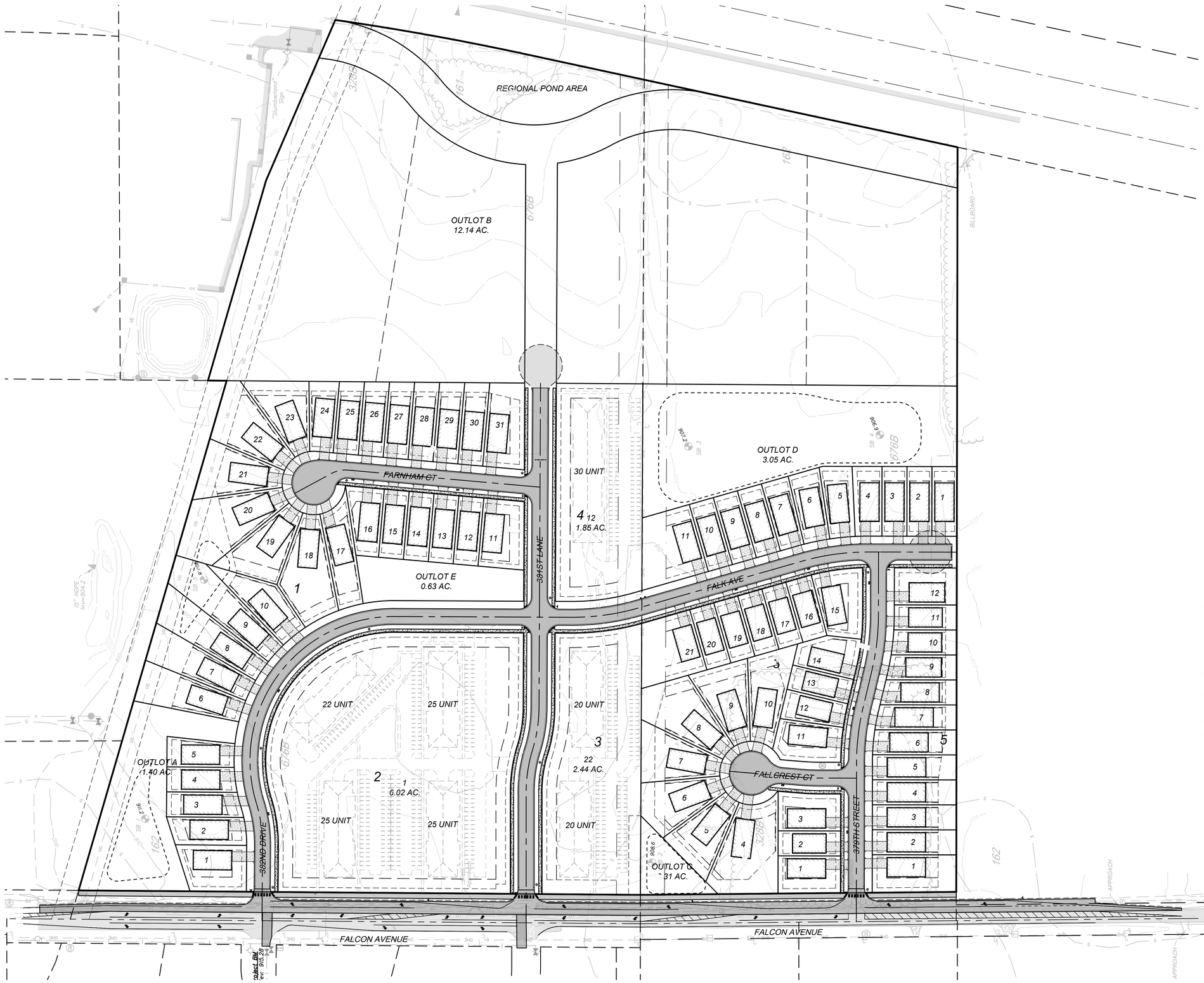

0' 100' 200'
SCALE: 1"=100'

LEGEND:

- PROPOSED ASPHALT PAVEMENT
- PROPOSED CONCRETE PAVEMENT
- MOUNTABLE CURB AND GUTTER
- PROPOSED HOUSE PAD
- PHASING LINE
- PROPOSED SIGN
- PROPOSED LIGHT POLE
- PROPOSED MAILBOX CLUSTER

SITE PLAN NOTES:

1. PAINTED PAVEMENT MARKING DIMENSIONS ARE SHOWN TO FACE OF CURB. ALL OTHER DIMENSIONS ARE SHOWN TO BACK OF CURB.
2. ALL CONCRETE RAMPS, SIDEWALKS AND ACCESSIBLE HANDICAPPED PARKING STALLS TO CONFORM TO CURRENT A.D.A. REQUIREMENTS.
3. CONTRACTOR SHALL FIELD VERIFY HORIZONTAL AND VERTICAL LOCATION OF EXISTING UTILITIES PRIOR TO START OF CONSTRUCTION.
4. CONTRACTOR SHALL INSTALL EROSION CONTROL MEASURES PRIOR TO THE START OF CONSTRUCTION.
5. CONSTRUCTION SHALL BE IN ACCORDANCE WITH APPLICABLE CITY, COUNTY AND STATE REGULATIONS.
6. SITE SHALL BE CONSTRUCTED IN ACCORDANCE WITH THE PLANS APPROVED BY THE CITY.
7. LANDSCAPING AND TURF ESTABLISHMENT PER LANDSCAPE PLANS & SPECIFICATIONS.
8. ALL DISTURBED AREAS OUTSIDE THE BUILDING PAD WHICH ARE NOT DESIGNATED TO BE PAVED OR RECEIVE AGLIME, SHALL RECEIVE AT LEAST 6" OF TOPSOIL AND SHALL BE SEEDED OR SODDED. REFER TO THE EROSION CONTROL PLAN FOR SOD AND SEED LOCATIONS. ALL OTHER AREAS DISTURBED BY CONSTRUCTION NOT SPECIFICALLY IDENTIFIED TO RECEIVE A CERTAIN SEED MIX SHALL BE MIXED WITH SEED MIX 25-131.
9. WHERE NEW SOD MEETS EXISTING SOD, EXISTING SOD EDGE SHALL BE CUT TO ALLOW FOR A CONSISTENT, UNIFORM STRAIGHT EDGE. JAGGED OR UNEVEN EDGES WILL NOT BE ACCEPTABLE. REMOVE TOPSOIL AT JOINT BETWEEN EXISTING AND NEW AS REQUIRED TO ALLOW NEW SOD SURFACE TO BE FLUSH WITH EXISTING.

DENSITY CALCULATION:

- DENSITY FOR R-3 ZONING: 6 UNITS/ACRE
- TOTAL ACRES: 38.42
- TOTAL UNITS: 230
- VILLA UNITS: 63
- APARTMENT UNITS: 167
- ASSUMING 2 STORY, UNDERGROUND PARKING, BUILDING EXTENTS MAY VARY.
  - LOT 2, BLOCK 1: 97 — 197 OUTDOOR STALLS
  - LOT 22, BLOCK 3: 40 — 90 OUTDOOR STALLS
  - LOT 12, BLOCK 4: 30 — 61 OUTDOOR STALLS

CALL 48 HOURS BEFORE DIGGING:
GOPHER STATE ONE CALL
TWIN CITY AREA 651-454-0002
MINNESOTA TOLL FREE 1-800-252-1166

REV NO.	DATE	DESCRIPTION
1	04/01/2025	REVISION PER CITY REVIEW
2	04/24/2025	REVISION PER CITY REVIEW

DATE: 04/24/2025
DESIGN BY: MJM
DRAWN BY: MJM
CHECKED BY: CJD
DWG FILE: SITE BASE
FILE NO.: 22-0030.00

I hereby certify that this plan, specification, or report was prepared by me or under my direct supervision and that I am a duly Licensed Professional Engineer under the laws of the State of Minnesota.

NOT FOR CONSTRUCTION

Signed: Christopher J. Dahn
Date: Lic. No. 58628

BOGART, PEDERSON & ASSOCIATES, INC.
LAND SURVEYING
CIVIL ENGINEERING
ENVIRONMENTAL SERVICES
13076 FIRST STREET, BECKER, MN 55308-9322
TEL: 763-262-9822 FAX: 763-262-9844

CEDAR RIDGE COMMUNITY LLC
CEDAR RIDGE COMMUNITY
City of North Branch, Chisago County, MN

FUTURE DEVELOPMENT

SHEET NO.
C2.3

N:\Projects Current\22-0030.02 Bellizer North Branch Plat\Civil\CAD Files\NB Site Base.dwg
3:06 PM
4/24/2025

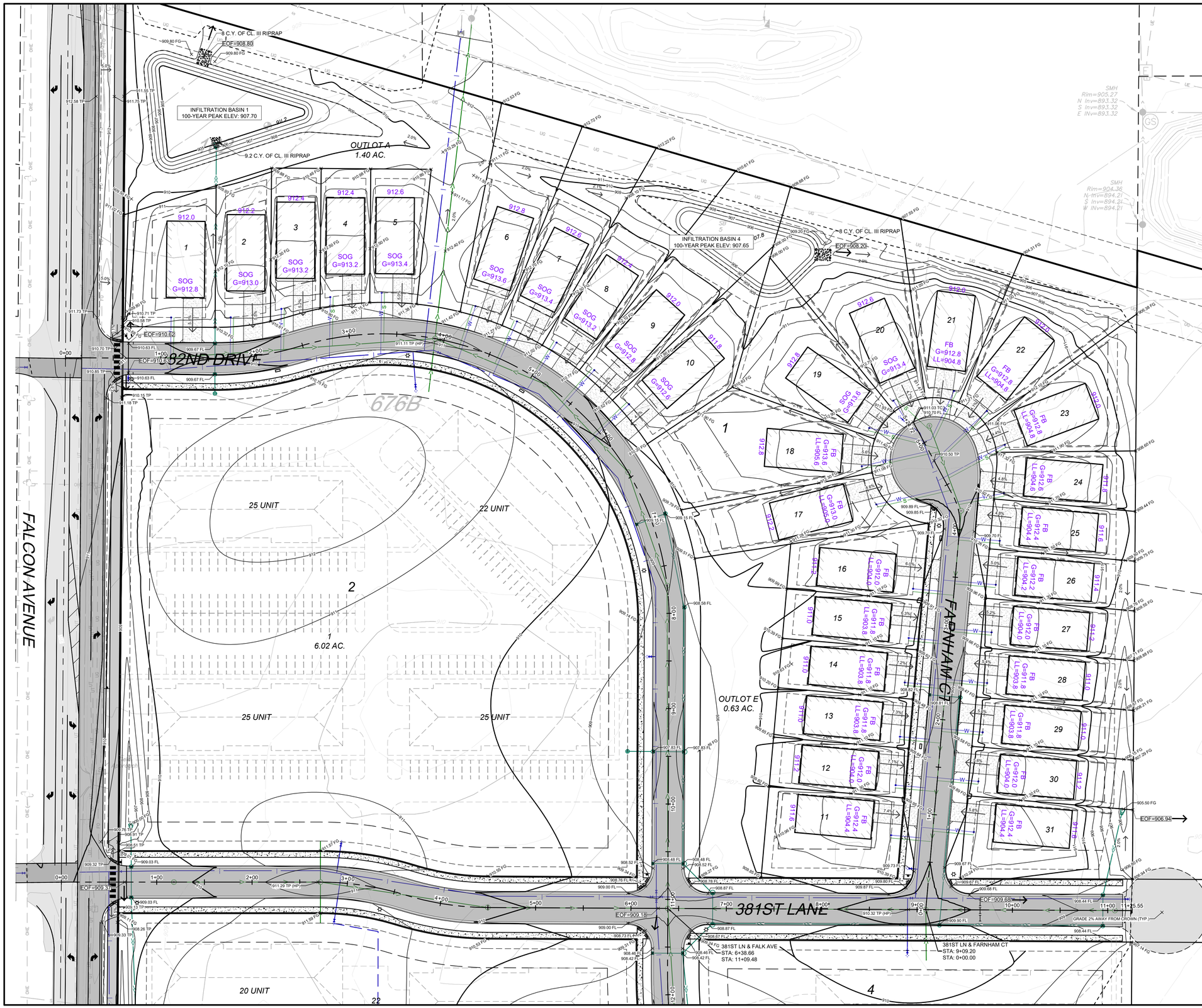

FB
G=913.0
LL=905.0

911.5

-HOUSE TYPE
-GARAGE ELEVATION
-LOWER LEVEL ELEVATION

FB: FULL BASEMENT
SOG: SLAB ON GRADE

-BACKYARD ELEVATION

GRADING GENERAL NOTES:

1. THE CONTRACTOR SHALL NOTE ANY DISCREPANCIES BETWEEN EXISTING CONDITIONS IN THE FIELD REPRESENTED WITHIN THE PLANS AS SHOWN AND ALERT THE ENGINEER BEFORE BIDDING THE PROJECT AND BEGINNING CONSTRUCTION.
2. CONTRACTOR SHALL LOCATE AND VERIFY ALL UTILITIES WHICH MAY AFFECT THIS WORK AND NOTIFY THE OWNER OF ANY CHANGES. CONTACT LOCAL UTILITY COMPANIES FOR EXACT LOCATIONS PRIOR TO BIDDING THE PROJECT AND COMMENCING WORK.
3. CONTRACTOR SHALL TAKE NECESSARY PRECAUTIONS TO PREVENT SILT AND DEBRIS RUN-OFF DURING GRADING OPERATIONS (I.E. SILT FENCE, STRAW BALES, ETC.).
4. CONTRACTOR SHALL VERIFY CRITICAL ELEVATIONS TO ENSURE CONFORMANCE WITH GRADING PLAN, PARTICULARLY WITH EXISTING STRUCTURES AND/OR PAVEMENTS TO REMAIN. MEET EXISTING GRADES ALONG STREETS, PROPERTY LINES, AND DRIVEWAY ENTRANCES. RESTORE ALL PAVEMENTS THAT REMAIN TO THEIR ORIGINAL IF NOT BETTER CONDITION. NOTIFY OWNER OF ANY CONFLICTS PRIOR TO BIDDING THE PROJECT.
5. TURF ESTABLISHMENT AREAS SHALL RECEIVE MINIMUM OF 4" DEPTH AS MEASURED IN PLACE OF TOPSOIL. TOPSOIL SHALL BE FURNISHED AND INSTALLED BY THE CONTRACTOR. ALL GRADED SLOPES GREATER THAN OR EQUAL TO 5:1 SHALL BE HYDROSEEDED, EROSION CONTROL BLANKETED, OR MULCHED TO HELP STABILIZE THE SLOPES BY GENERAL CONTRACTOR.
6. PROPOSED SPOT ELEVATIONS ARE TO THE TOP OF CURB UNLESS NOTED OTHERWISE. ELEVATION OF FLOW LINE IS 6" BELOW TOP OF CURB UNLESS OTHERWISE SHOWN.
7. CONTRACTOR SHALL BE SOLELY RESPONSIBLE FOR DETERMINING QUANTITIES OF CUT, FILL AND WASTE MATERIALS TO BE HANDLED, AND FOR AMOUNT OF GRADING TO BE DONE IN ORDER TO COMPLETELY PERFORM ALL WORK INDICATED ON THE DRAWINGS. IMPORT SUITABLE MATERIAL AND EXPORT UNSUITABLE / EXCESS / WASTE MATERIAL AS REQUIRED. ALL COSTS ASSOCIATED WITH IMPORTING AND EXPORTING MATERIALS SHALL BE INCIDENTAL TO THE CONTRACT.
8. IT IS INTENDED THAT EARTHWORK (CUT VS. FILL) WILL NOT BALANCE ON SITE. THE CONTRACTOR SHALL SUBMIT THE QUANTITY OF MATERIAL AND AMOUNT OF ANTICIPATED GRADE ADJUSTMENT FOR REVIEW BY THE ENGINEER A MINIMUM OF FOUR WEEKDAYS PRIOR TO MAKING ADJUSTMENTS. ALL GRADE ADJUSTMENTS MUST BE APPROVED BY THE ENGINEER. NO ADDITIONAL COMPENSATION SHALL BE ALLOWED FOR WORK ASSOCIATED WITH GRADING ADJUSTMENTS, INCLUDING, BUT NOT LIMITED TO, EARTHWORK OPERATIONS, STORM SEWER PIPING AND STRUCTURE ADJUSTMENTS, CONSTRUCTION SURVEYING FOR ADJUSTING FEATURE LOCATIONS ACCORDINGLY, SILT FENCE, ETC.
9. FAILURE OF TURF DEVELOPMENT: IN THE EVENT THE CONTRACTOR FAILS TO PROVIDE AN ACCEPTABLE TURF, THE CONTRACTOR SHALL RE-SEED OR RE-SOD ALL APPLICABLE AREAS, AT NO ADDITIONAL COST TO THE OWNER, TO THE SATISFACTION OF THE ENGINEER.
10. ANY MANHOLE, CATCH BASIN, STORM SEWER, SANITARY SEWER, DRAINTILE, OR OTHER POTENTIAL SOURCE FOR CONTAMINATION SHALL BE INSTALLED AT LEAST 10 FEET HORIZONTALLY FROM ANY WATERMAIN PER MINNESOTA PLUMBING CODE. THIS ISOLATION DISTANCE SHALL BE MEASURED FROM THE OUTER EDGE OF THE PIPE TO THE OUTER EDGE OF THE CONTAMINATION SOURCE (OUTER EDGE OF STRUCTURES OR PIPING OR SIMILAR)
11. CONTRACTOR SHALL MAINTAIN DRAINAGE FROM EXISTING BUILDING AT ALL TIMES. PROVIDE TEMPORARY STORM SEWER (INCLUDING, BUT NOT LIMITED TO, CATCH BASINS, MANHOLES, PIPING, ETC.) AS REQUIRED. EXISTING STORM SEWER SHALL NOT BE REMOVED UNTIL TEMPORARY OR PERMANENT STORM SEWER IS INSTALLED AND FUNCTIONAL. COORDINATE ALL REMOVALS WITH APPROPRIATE TRADES (SITE UTILITY CONTRACTOR, MECHANICAL CONTRACTOR, ETC.) AS REQUIRED.
12. ALL GRADING AND CONSTRUCTION IN THE SMALL UTILITY EASEMENTS WILL NEED TO BE APPROVED AND COORDINATED WITH THE UTILITY PROVIDER.

REV NO.	DATE	DESCRIPTION
1	04/01/2025	REVISION PER CITY REVIEW
2	04/24/2025	REVISION PER CITY REVIEW

DATE: 04/24/2025
DESIGN BY: MJM
DRAWN BY: MJM
CHECKED BY: CJD
DWG FILE: GRADING
FILE NO.: 22-0030.00

I hereby certify that this plan, specification, or report was prepared by me or under my direct supervision and that I am a duly Licensed Professional Engineer under the laws of the State of Minnesota.

NOT FOR CONSTRUCTION

Signed: Christopher J. Dahn
Date: Lic. No. 58628

BOGART, PEDERSON & ASSOCIATES, INC.
LAND SURVEYING
CIVIL ENGINEERING
ENVIRONMENTAL SERVICES
12076 FIRST STREET, BECKER, MN 55308-9322
TEL: 763-262-3822 FAX: 763-262-3844

CEDAR RIDGE COMMUNITY LLC
CEDAR RIDGE COMMUNITY
City of North Branch, Chisago County, MN

NORTH GRADING PLAN

SHEET NO.
C3.1

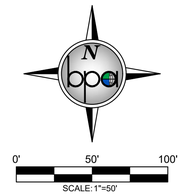

LEGEND:

	PROPOSED RIP RAP
980.50 TC	NEW TOP-BACK OF CURB ELEVATION
980.50 FL	NEW FLOW LINE OF CURB ELEVATION
980.50 SW	NEW SIDEWALK ELEVATION
980.50 TP	NEW TOP OF PAVEMENT ELEVATION
980.50 FG	NEW FINISHED GRADE ELEVATION
980.50 EX	EXISTING ELEVATION
984	PROPOSED CONTOUR
	PROPOSED SLOPE
E.O.F.	EMERGENCY OVERFLOW
	PHASING LINE

FB
G=913.0
LL=905.0
911.5

-HOUSE TYPE
-GARAGE ELEVATION
-LOWER LEVEL ELEVATION

FB: FULL BASEMENT
SOG: SLAB ON GRADE

-BACKYARD ELEVATION

GRADING GENERAL NOTES:

1. THE CONTRACTOR SHALL NOTE ANY DISCREPANCIES BETWEEN EXISTING CONDITIONS IN THE FIELD REPRESENTED WITHIN THE PLANS AS SHOWN AND ALERT THE ENGINEER BEFORE BIDDING THE PROJECT AND BEGINNING CONSTRUCTION.
2. CONTRACTOR SHALL LOCATE AND VERIFY ALL UTILITIES WHICH MAY AFFECT THIS WORK AND NOTIFY THE OWNER OF ANY CHANGES. CONTACT LOCAL UTILITY COMPANIES FOR EXACT LOCATIONS PRIOR TO BIDDING THE PROJECT AND COMMENCING WORK.
3. CONTRACTOR SHALL TAKE NECESSARY PRECAUTIONS TO PREVENT SILT AND DEBRIS RUN-OFF DURING GRADING OPERATIONS (I.E. SILT FENCE, STRAW BALES, ETC.).
4. CONTRACTOR SHALL VERIFY CRITICAL ELEVATIONS TO ENSURE CONFORMANCE WITH GRADING PLAN, PARTICULARLY WITH EXISTING STRUCTURES AND/OR PAVEMENTS TO REMAIN. MEET EXISTING GRADES ALONG STREETS, PROPERTY LINES, AND DRIVEWAY ENTRANCES. RESTORE ALL PAVEMENTS THAT REMAIN TO THEIR ORIGINAL IF NOT BETTER CONDITION. NOTIFY OWNER OF ANY CONFLICTS PRIOR TO BIDDING THE PROJECT.
5. TURF ESTABLISHMENT AREAS SHALL RECEIVE MINIMUM OF 4" DEPTH AS MEASURED IN PLACE OF TOPSOIL. TOPSOIL SHALL BE FURNISHED AND INSTALLED BY THE CONTRACTOR. ALL GRADED SLOPES GREATER THAN OR EQUAL TO 5:1 SHALL BE HYDROSEEDED, EROSION CONTROL BLANKETED, OR MULCHED TO HELP STABILIZE THE SLOPES BY GENERAL CONTRACTOR.
6. PROPOSED SPOT ELEVATIONS ARE TO THE TOP OF CURB UNLESS NOTED OTHERWISE. ELEVATION OF FLOW LINE IS 6" BELOW TOP OF CURB UNLESS OTHERWISE SHOWN.
7. CONTRACTOR SHALL BE SOLELY RESPONSIBLE FOR DETERMINING QUANTITIES OF CUT, FILL AND WASTE MATERIALS TO BE HANDLED, AND FOR AMOUNT OF GRADING TO BE DONE IN ORDER TO COMPLETELY PERFORM ALL WORK INDICATED ON THE DRAWINGS. IMPORT SUITABLE MATERIAL AND EXPORT UNSUITABLE / EXCESS / WASTE MATERIAL AS REQUIRED. ALL COSTS ASSOCIATED WITH IMPORTING AND EXPORTING MATERIALS SHALL BE INCIDENTAL TO THE CONTRACT.
8. IT IS INTENDED THAT EARTHWORK (CUT VS. FILL) WILL NOT BALANCE ON SITE. THE CONTRACTOR SHALL SUBMIT THE QUANTITY OF MATERIAL AND AMOUNT OF ANTICIPATED GRADE ADJUSTMENT FOR REVIEW BY THE ENGINEER A MINIMUM OF FOUR WEEKDAYS PRIOR TO MAKING ADJUSTMENTS. ALL GRADE ADJUSTMENTS MUST BE APPROVED BY THE ENGINEER. NO ADDITIONAL COMPENSATION SHALL BE ALLOWED FOR WORK ASSOCIATED WITH GRADING ADJUSTMENTS, INCLUDING, BUT NOT LIMITED TO, EARTHWORK OPERATIONS, STORM SEWER PIPING AND STRUCTURE ADJUSTMENTS, CONSTRUCTION SURVEYING FOR ADJUSTING FEATURE LOCATIONS ACCORDINGLY, SILT FENCE, ETC.
9. FAILURE OF TURF DEVELOPMENT: IN THE EVENT THE CONTRACTOR FAILS TO PROVIDE AN ACCEPTABLE TURF, THE CONTRACTOR SHALL RE-SEED OR RE-SOD ALL APPLICABLE AREAS, AT NO ADDITIONAL COST TO THE OWNER, TO THE SATISFACTION OF THE ENGINEER.
10. ANY MANHOLE, CATCH BASIN, STORM SEWER, SANITARY SEWER, DRAINTILE, OR OTHER POTENTIAL SOURCE FOR CONTAMINATION SHALL BE INSTALLED AT LEAST 10 FEET HORIZONTALLY FROM ANY WATERMAIN PER MINNESOTA PLUMBING CODE. THIS ISOLATION DISTANCE SHALL BE MEASURED FROM THE OUTER EDGE OF THE PIPE TO THE OUTER EDGE OF THE CONTAMINATION SOURCE (OUTER EDGE OF STRUCTURES OR PIPING OR SIMILAR)
11. CONTRACTOR SHALL MAINTAIN DRAINAGE FROM EXISTING BUILDING AT ALL TIMES. PROVIDE TEMPORARY STORM SEWER (INCLUDING, BUT NOT LIMITED TO, CATCH BASINS, MANHOLES, PIPING, ETC.) AS REQUIRED. EXISTING STORM SEWER SHALL NOT BE REMOVED UNTIL TEMPORARY OR PERMANENT STORM SEWER IS INSTALLED AND FUNCTIONAL. COORDINATE ALL REMOVALS WITH APPROPRIATE TRADES (SITE UTILITY CONTRACTOR, MECHANICAL CONTRACTOR, ETC.) AS REQUIRED.
12. ALL GRADING AND CONSTRUCTION IN THE SMALL UTILITY EASEMENTS WILL NEED TO BE APPROVED AND COORDINATED WITH THE UTILITY PROVIDER.

REV NO.	DATE	DESCRIPTION
1	04/01/2025	REVISION PER CITY REVIEW
2	04/24/2025	REVISION PER CITY REVIEW

DATE: 04/24/2025
DESIGN BY: M.J.M
DRAWN BY: M.J.M
CHECKED BY: C.J.D
DWG FILE: GRADING
FILE NO.: 22-0030.00

I hereby certify that this plan, specification, or report was prepared by me or under my direct supervision and that I am a duly Licensed Professional Engineer under the laws of the State of Minnesota.

Signed: Christopher J. Dahn
Date: Lic. No. 58628

NOT FOR CONSTRUCTION

BOGART, PEDERSON & ASSOCIATES, INC.
LAND SURVEYING
CIVIL ENGINEERING
ENVIRONMENTAL SERVICES
13076 FIRST STREET, BECKER, MN 55308-9322
TEL: 763-262-3822 FAX: 763-262-3844

CEDAR RIDGE COMMUNITY LLC
CEDAR RIDGE COMMUNITY
City of North Branch, Chisago County, MN

SOUTH GRADING PLAN

SHEET NO.
C3.2

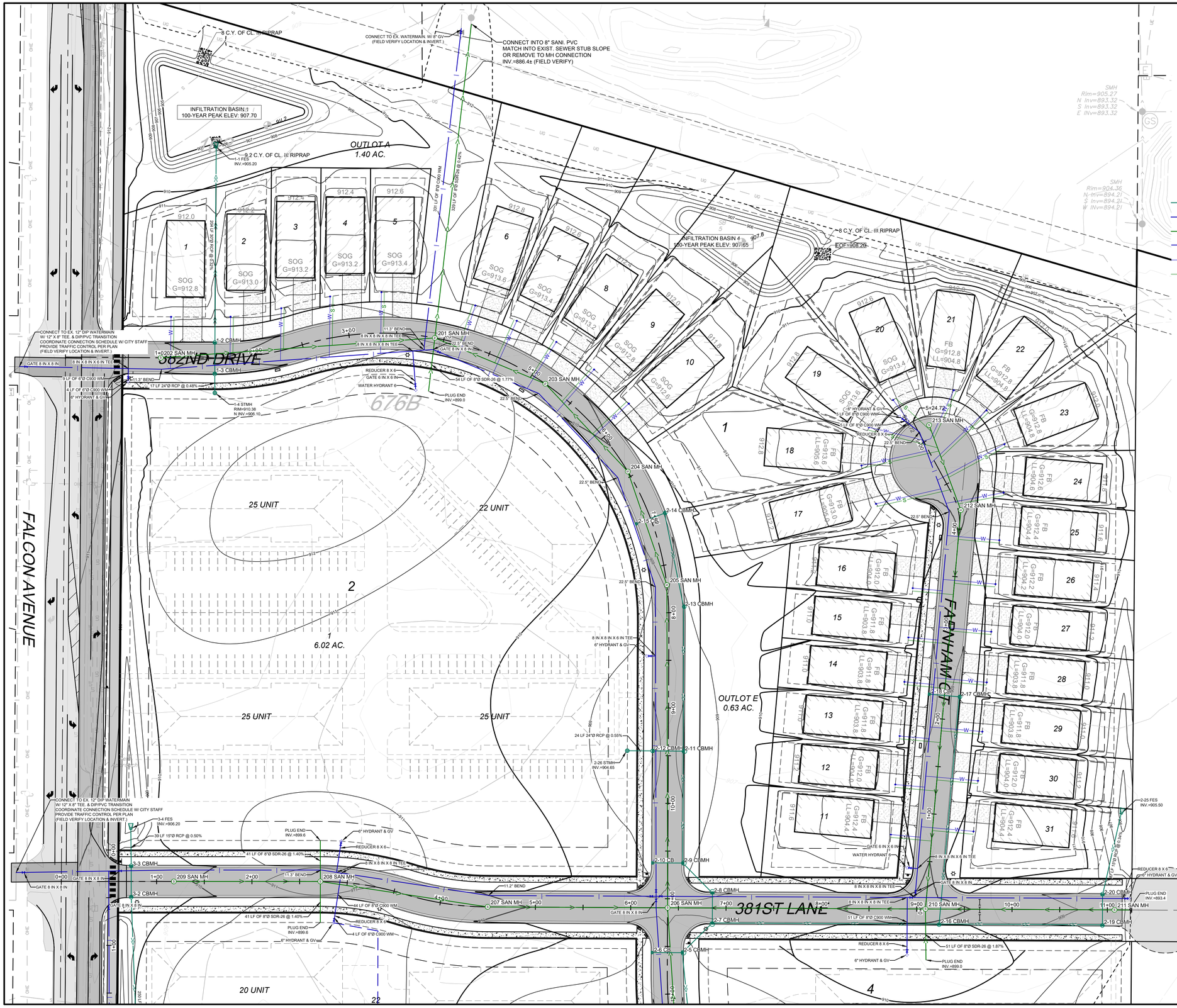

LEGEND:

- PROPOSED STORM SEWER
- PROPOSED WATER LINE
- PROPOSED SANITARY SEWER
- PROPOSED FITTING
- PROPOSED WATER SERVICE
- PROPOSED SANITARY SERVICE
- PROPOSED SANITARY MANHOLE
- PROPOSED FLARED END SECITON
- PROPOSED STORM MANHOLE
- PROPOSED CATCH BASIN
- PROPOSED GATE VALVE & BOX
- PROPOSED HYDRANT
- PROPOSED CLEANOUT
- PROPOSED RIP RAP
- PHASING LINE

UTILITY GENERAL NOTES:

1. CONTRACTOR SHALL BE RESPONSIBLE FOR COORDINATING ALL UTILITY RELOCATIONS.
2. CONTRACTOR SHALL LOCATE AND VERIFY ALL UTILITIES WHICH MAY AFFECT THIS WORK AND NOTIFY OWNER OF ANY CHANGES. CONTACT LOCAL UTILITY COMPANIES FOR EXACT LOCATIONS PRIOR TO BIDDING THE PROJECT AND COMMENCING WORK.
3. CONTRACTOR SHALL VERIFY CRITICAL ELEVATIONS TO ENSURE CONFORMANCE WITH GRADING PLAN AND EXISTING UTILITIES, PARTICULARLY WITH EXISTING STRUCTURES AND/OR PAVEMENTS TO REMAIN.
4. THE CONTRACTOR SHALL NOTE ANY DISCREPANCIES BETWEEN EXISTING CONDITIONS AS EXISTING IN THE FIELD AND AS REPRESENTED WITHIN THE PLANS AS SHOWN AND ALERT THE ENGINEER BEFORE BIDDING THE PROJECT AND BEGINNING CONSTRUCTION.
5. WATER LINE TO MINIMUM 8.0 FEET DEPTH.
6. VERIFY INVERT ELEVATIONS OF EXISTING SANITARY LINE AT POINT OF CONNECTION WITH NEW SANITARY LINE PRIOR TO INSTALLING ANY NEW UTILITIES.
7. ALL CROSSING ELEVATIONS OF NEW UTILITIES & SIZES OF THE EXISTING UTILITIES ARE BASED ON ASSUMED ELEVATIONS AND SIZES PROVIDED BY THE SURVEY.
8. ALL SANITARY SERVICE PIPE AND FITTINGS WILL BE SCHDULE 40.
9. ALL STORM SEWER SHALL BE PVC SCHEDULE 40 WHEN LESS THAN 8" IN DIAMETER. ALL RCP STORM SEWER SHALL BE CLASS V PIPE UNLESS OTHERWISE NOTED. ALL HDPE STORM SEWER SHALL BE DUAL WALL HIGH PERFORMANCE POLYPROPYLENE PIPE AND SHALL CONFORM TO AASHTO M330.
10. ALL WATER LINES 4" OR GREATER SHALL CONFORM TO AWWA C900 OR GRADE PE-3408 OR GRADE PE4710 PIPE AND SHALL BE RATED FOR 200 PSI. ALL WATER LINES LESS THAT 4" SHALL CONFORM TO AWWA C901 SIDR 7 (HDPE WATER LINE) OR TYPE K COPPER PIPE.
11. THE CONTRACTOR SHALL BE RESPONSIBLE FOR OBTAINING TWO CONSECUTIVE PASSING BACTERIOLOGICAL TESTS FROM THE PROPOSED WATER SERVICE.
12. THE APPLICANT SHALL BE RESPONSIBLE FOR REPLACING ANY CONCRETE PAVEMENT WHICH IS DAMAGED OR REMOVED AS A RESULT OF THE PROPOSED WATER, SANITARY, STORM SEWER SERVICE INSTALLATION.
13. IF DEWATERING IS REQUIRED FOR THIS PROJECT, THE PUMP DISCHARGE SHALL BE TREATED PRIOR TO BEING DISCHARGED OFF-SITE OR INTO A SURFACE WATER. THE DISCHARGE SHALL BE VISUALLY CHECKED TO ENSURE THAT IT IS VISIBLY CLEAN WATER. NO DEWATERING IS EXPECTED FOR THIS SITE DUE TO SANDY SOIL CONDITIONS.
14. ALL EXISTING CASTINGS FOR SANITARY SEWER AND STORM STRUCTURES WITHIN PROPOSED WORK AREAS THAT ARE WITHIN THE CITY RIGHT OF WAY WILL BE REPLACED WITH TYPE A OR TYPE E CASTINGS AS SHOWN ON APPLICABLE CITY STD. PLATE STRT-14. ALL ADJUSTING RINGS WILL BE REPLACED WITH HDPE ADJUSTING RINGS.
15. CONTRACTOR SHALL PROVIDE TRAFFIC CONTROL PLAN FOR PAVEMENT REMOVAL, UTILITY INSTALLATION, AND REPLACEMENT AS NEEDED.
16. SANITARY SERVICE RISER PIPE SHALL BE OUTSIDE OF THE ROAD RIGHT OF WAY. RISERS SHALL BE PLACED ON THE PROPERTY LINE IF REQUIRED. SEE DETAIL SAN-001.

REV NO.	DATE	DESCRIPTION
1	04/01/2025	REVISION PER CITY REVIEW
2	04/24/2025	REVISION PER CITY REVIEW

DATE: 04/24/2025
DESIGN BY: MJM
DRAWN BY: MJM
CHECKED BY: CJD
DWG FILE: UTILITY
FILE NO.: 22-0030.00

I hereby certify that this plan, specification, or report was prepared by me or under my direct supervision and that I am a duly Licensed Professional Engineer under the laws of the State of Minnesota.

NOT FOR CONSTRUCTION

Signed: Christopher J. Dahn
Date: Lic. No. 58628

BOGART, PEDERSON & ASSOCIATES, INC.
LAND SURVEYING
CIVIL ENGINEERING
ENVIRONMENTAL SERVICES
13076 FIRST STREET, BECKER, MN 55308-9322
TEL. 763-262-9222 FAX. 763-262-9944

CEDAR RIDGE COMMUNITY LLC
CEDAR RIDGE COMMUNITY
City of North Branch, Chisago County, MN

NORTH UTILITY PLAN

SHEET NO.
C4.1

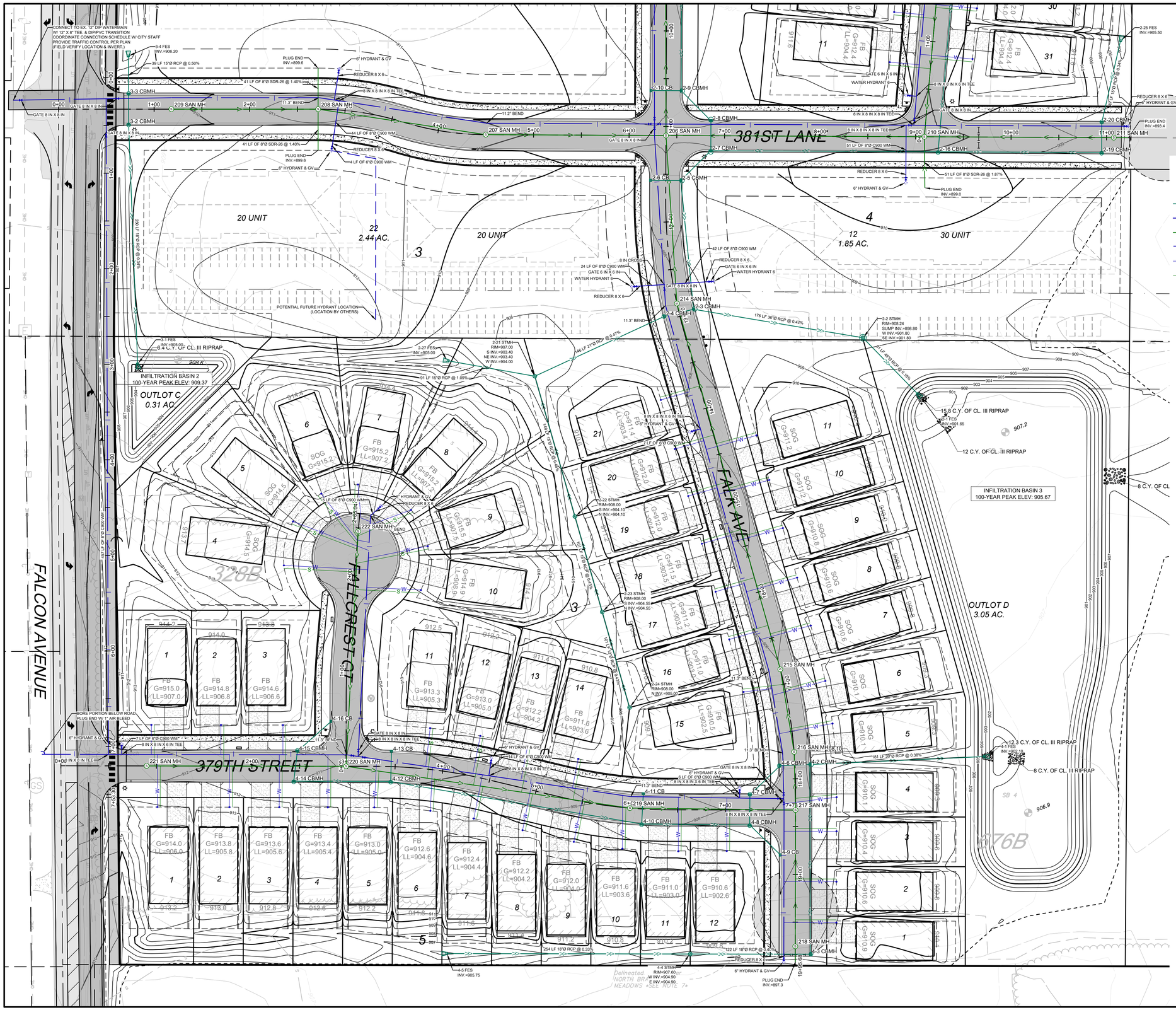

LEGEND:

- PROPOSED STORM SEWER
- PROPOSED WATER LINE
- PROPOSED SANITARY SEWER
- PROPOSED FITTING
- PROPOSED WATER SERVICE
- PROPOSED SANITARY SERVICE
- PROPOSED SANITARY MANHOLE
- PROPOSED FLARED END SECITON
- PROPOSED STORM MANHOLE
- PROPOSED CATCH BASIN
- PROPOSED GATE VALVE & BOX
- PROPOSED HYDRANT
- PROPOSED CLEANOUT
- PROPOSED RIP RAP
- PHASING LINE

UTILITY GENERAL NOTES:

1. CONTRACTOR SHALL BE RESPONSIBLE FOR COORDINATING ALL UTILITY RELOCATIONS.
2. CONTRACTOR SHALL LOCATE AND VERIFY ALL UTILITIES WHICH MAY AFFECT THIS WORK AND NOTIFY OWNER OF ANY CHANGES. CONTACT LOCAL UTILITY COMPANIES FOR EXACT LOCATIONS PRIOR TO BIDDING THE PROJECT AND COMMENCING WORK.
3. CONTRACTOR SHALL VERIFY CRITICAL ELEVATIONS TO ENSURE CONFORMANCE WITH GRADING PLAN AND EXISTING UTILITIES, PARTICULARLY WITH EXISTING STRUCTURES AND/OR PAVEMENTS TO REMAIN.
4. THE CONTRACTOR SHALL NOTE ANY DISCREPANCIES BETWEEN EXISTING CONDITIONS AS EXISTING IN THE FIELD AND AS REPRESENTED WITHIN THE PLANS AS SHOWN AND ALERT THE ENGINEER BEFORE BIDDING THE PROJECT AND BEGINNING CONSTRUCTION.
5. WATER LINE TO MINIMUM 8.0 FEET DEPTH.
6. VERIFY INVERT ELEVATIONS OF EXISTING SANITARY LINE AT POINT OF CONNECTION WITH NEW SANITARY LINE PRIOR TO INSTALLING ANY NEW UTILITIES.
7. ALL CROSSING ELEVATIONS OF NEW UTILITIES & SIZES OF THE EXISTING UTILITIES ARE BASED ON ASSUMED ELEVATIONS AND SIZES PROVIDED BY THE SURVEY.
8. ALL SANITARY SERVICE PIPE AND FITTINGS WILL BE SCHDULE 40.
9. ALL STORM SEWER SHALL BE PVC SCHEDULE 40 WHEN LESS THAN 8" IN DIAMETER. ALL RCP STORM SEWER SHALL BE CLASS V PIPE UNLESS OTHERWISE NOTED. ALL HDPE STORM SEWER SHALL BE DUAL WALL HIGH PERFORMANCE POLYPROPYLENE PIPE AND SHALL CONFORM TO AASHTO M330.
10. ALL WATER LINES 4" OR GREATER SHALL CONFORM TO AWWA C900 OR GRADE PE-3408 OR GRADE PE4710 PIPE AND SHALL BE RATED FOR 200 PSI. ALL WATER LINES LESS THAT 4" SHALL CONFORM TO AWWA C901 SIDR 7 (HDPE WATER LINE) OR TYPE K COPPER PIPE.
11. THE CONTRACTOR SHALL BE RESPONSIBLE FOR OBTAINING TWO CONSECUTIVE PASSING BACTERIOLOGICAL TESTS FROM THE PROPOSED WATER SERVICE.
12. THE APPLICANT SHALL BE RESPONSIBLE FOR REPLACING ANY CONCRETE PAVEMENT WHICH IS DAMAGED OR REMOVED AS A RESULT OF THE PROPOSED WATER, SANITARY, STORM SEWER SERVICE INSTALLATION.
13. IF DEWATERING IS REQUIRED FOR THIS PROJECT, THE PUMP DISCHARGE SHALL BE TREATED PRIOR TO BEING DISCHARGED OFF-SITE OR INTO A SURFACE WATER. THE DISCHARGE SHALL BE VISUALLY CHECKED TO ENSURE THAT IT IS VISIBLY CLEAN WATER. NO DEWATERING IS EXPECTED FOR THIS SITE DUE TO SANDY SOIL CONDITIONS.
14. ALL EXISTING CASTINGS FOR SANITARY SEWER AND STORM STRUCTURES WITHIN PROPOSED WORK AREAS THAT ARE WITHIN THE CITY RIGHT OF WAY WILL BE REPLACED WITH TYPE A OR TYPE E CASTINGS AS SHOWN ON APPLICABLE CITY STD. PLATE STRT-14. ALL ADJUSTING RINGS WILL BE REPLACED WITH HDPE ADJUSTING RINGS.
15. CONTRACTOR SHALL PROVIDE TRAFFIC CONTROL PLAN FOR PAVEMENT REMOVAL, UTILITY INSTALLATION, AND REPLACEMENT AS NEEDED.
16. SANITARY SERVICE RISER PIPE SHALL BE OUTSIDE OF THE ROAD RIGHT OF WAY. RISERS SHALL BE PLACED ON THE PROPERTY LINE IF REQUIRED. SEE DETAIL SAN-001.

REV NO.	DATE	DESCRIPTION
1	04/01/2025	REVISION PER CITY REVIEW
2	04/24/2025	REVISION PER CITY REVIEW

DATE: 04/24/2025
DESIGN BY: M.J.M
DRAWN BY: M.J.M
CHECKED BY: C.J.D
DWG FILE: UTILITY
FILE NO.: 22-0030.00

I hereby certify that this plan, specification, or report was prepared by me or under my direct supervision and that I am a duly Licensed Professional Engineer under the laws of the State of Minnesota.

NOT FOR CONSTRUCTION

Signed: Christopher J. Dahn
Date: Lic. No. 58628

BOGART, PEDERSON & ASSOCIATES, INC.
LAND SURVEYING
CIVIL ENGINEERING
ENVIRONMENTAL SERVICES
13076 FIRST STREET, BECKER, MN 55308-9322
TEL: 763-262-3822 FAX: 763-262-3844

CEDAR RIDGE COMMUNITY LLC
CEDAR RIDGE COMMUNITY
City of North Branch, Chisago County, MN

SOUTH UTILITY PLAN

SHEET NO.
C4.2

LEGEND:

- PROPOSED RIP RAP
- 984 PROPOSED CONTOUR
- PROPOSED STORM SEWER
- PROPOSED WATER LINE
- PROPOSED SANITARY SEWER
- W PROPOSED WATER SERVICE
- S PROPOSED SANITARY SERVICE
- PROPOSED CATCH BASIN
- PROPOSED FLARED END SECITON
- D PROPOSED STORM MANHOLE
- PROPOSED GATE VALVE & BOX
- PROPOSED HYDRANT
- S PROPOSED SANITARY MANHOLE

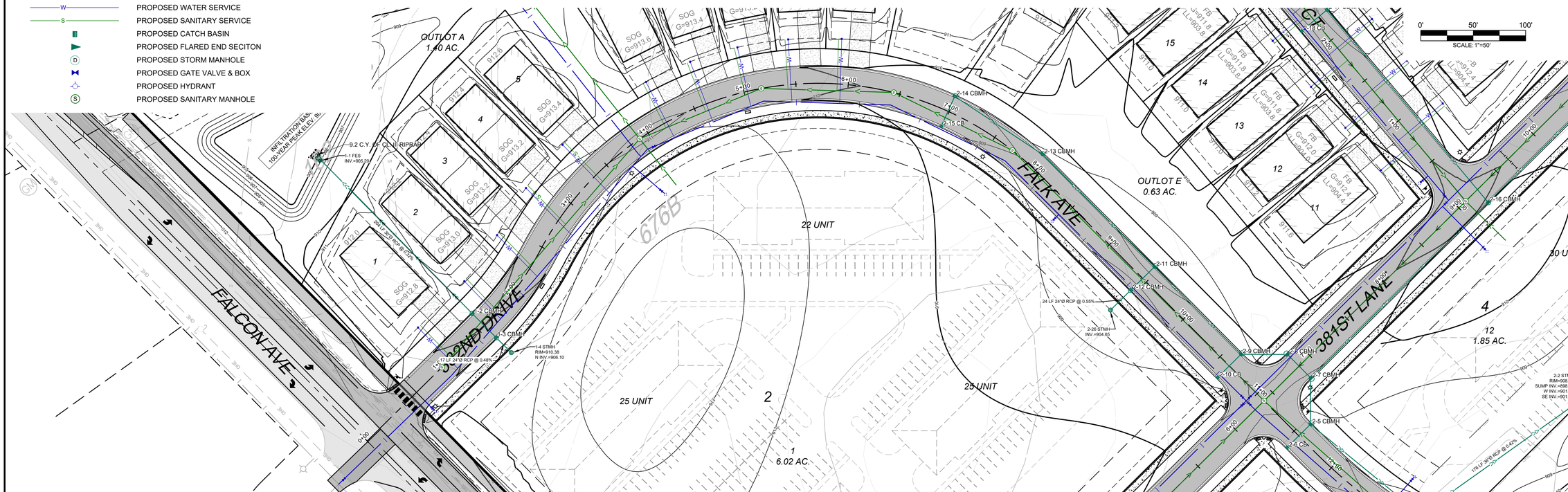

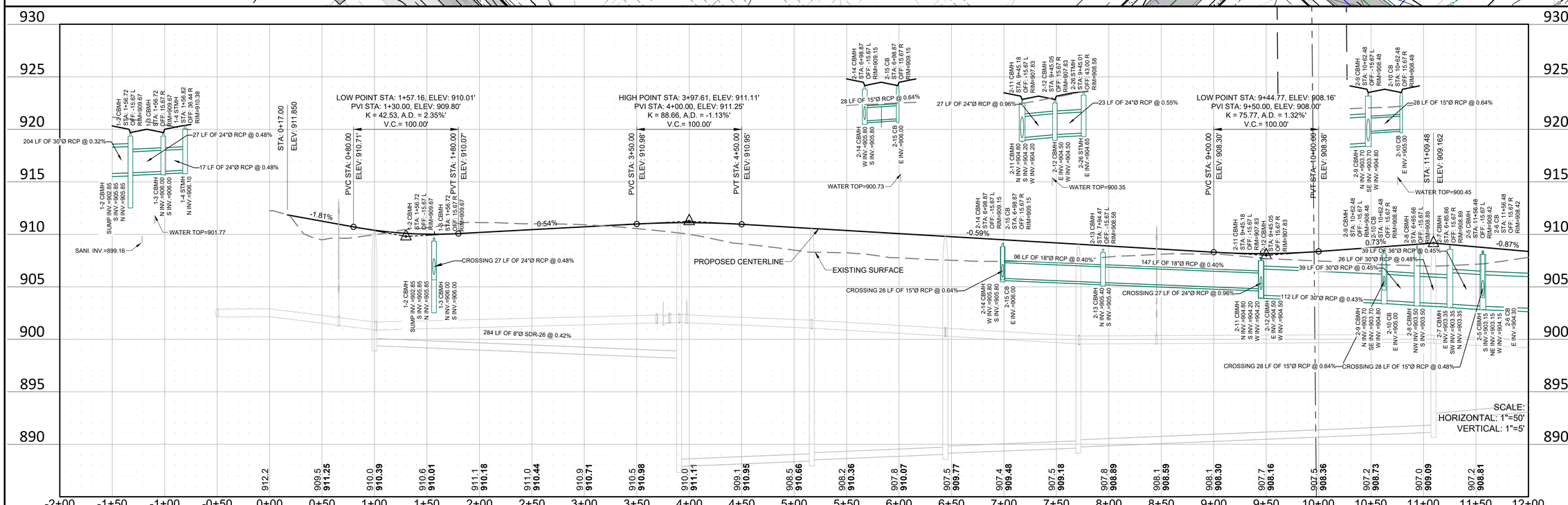

REV NO.	DATE	DESCRIPTION
1	04/01/2025	REVISION PER CITY REVIEW
2	04/24/2025	REVISION PER CITY REVIEW

DATE:	04/24/2025
DESIGN BY:	MJM
DRAWN BY:	MJM
CHECKED BY:	CJD
DWG FILE:	GRADING
FILE NO.:	22-0030.00

I hereby certify that this plan, specification, or report was prepared by me or under my direct supervision and that I am a duly Licensed Professional Engineer under the laws of the State of Minnesota.

Signed: Christopher J. Dahn

Date: Lic. No. 58628

NOT FOR CONSTRUCTION

BOGART, PEDERSON & ASSOCIATES, INC.
LAND SURVEYING
CIVIL ENGINEERING
ENVIRONMENTAL SERVICES
13076 FIRST STREET, BECKER, MN 55308-9322
TEL: 763-262-9822 FAX: 763-262-9844

CEDAR RIDGE COMMUNITY LLC
CEDAR RIDGE COMMUNITY
City of North Branch, Chisago County, MN

382ND & FALK AVE (STREET & STORM)

SHEET NO.

C5.1

N:\Projects Current\22-0030.00 Becker North Branch Plat\Civil\CAD Files\NB Utility.dwg 4/24/2025 3:08 PM

LEGEND:

- PROPOSED RIP RAP
- 984 PROPOSED CONTOUR
- PROPOSED STORM SEWER
- PROPOSED WATER LINE
- PROPOSED SANITARY SEWER
- W PROPOSED WATER SERVICE
- S PROPOSED SANITARY SERVICE
- PROPOSED CATCH BASIN
- PROPOSED FLARED END SECITON
- D PROPOSED STORM MANHOLE
- PROPOSED GATE VALVE & BOX
- PROPOSED HYDRANT
- S PROPOSED SANITARY MANHOLE

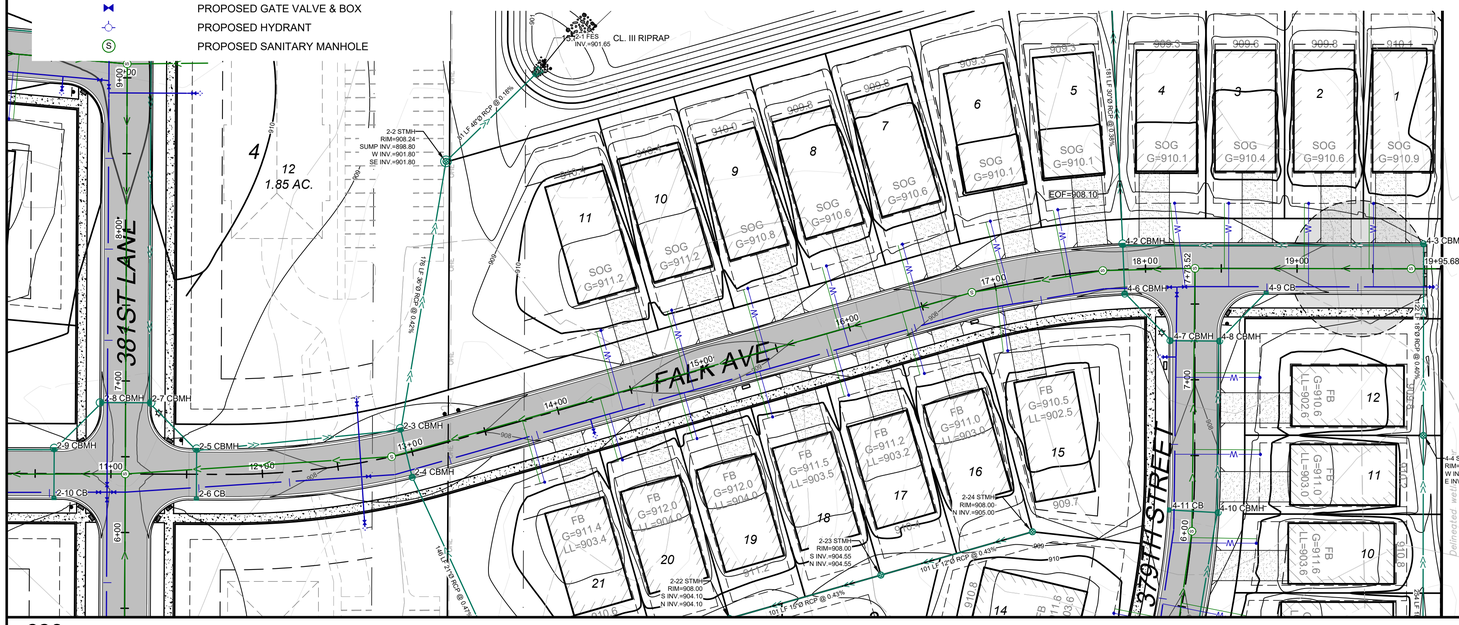

0' 50' 100'
SCALE: 1"=50'

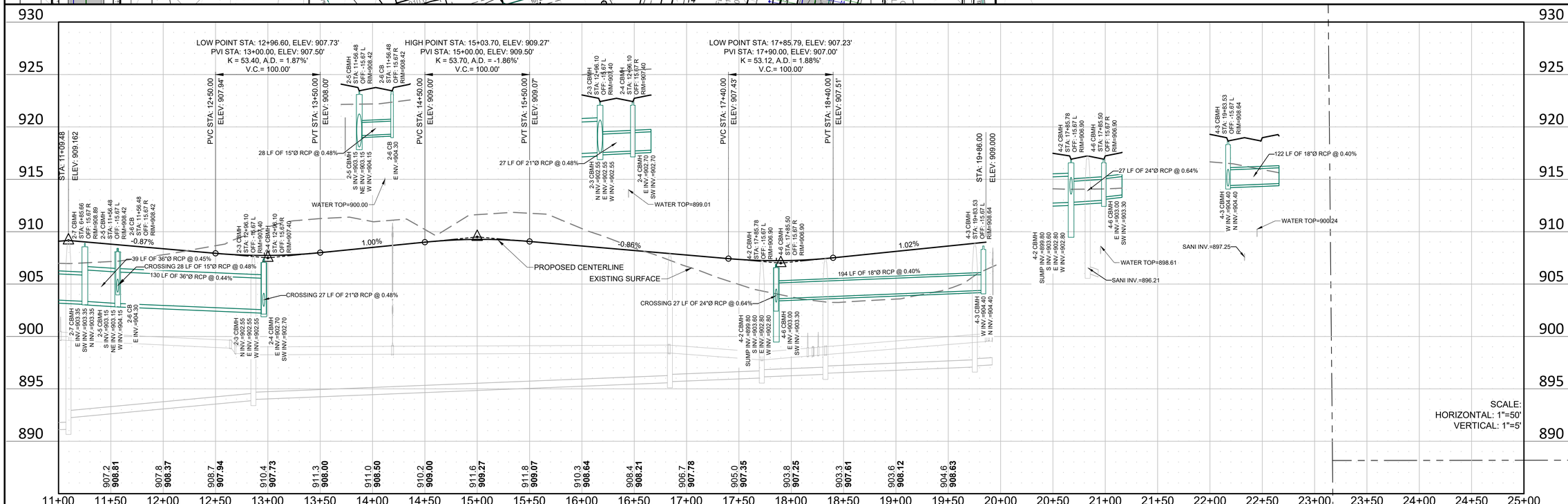

REV NO.	DATE	DESCRIPTION
1	04/01/2025	REVISION PER CITY REVIEW
2	04/24/2025	REVISION PER CITY REVIEW

DATE: 04/24/2025
DESIGN BY: MJM
DRAWN BY: MJM
CHECKED BY: CJD
DWG FILE: GRADING
FILE NO.: 22-0030.00

I hereby certify that this plan, specification, or report was prepared by me or under my direct supervision and that I am a duly Licensed Professional Engineer under the laws of the State of Minnesota.

NOT FOR CONSTRUCTION

Signed: Christopher J. Dahn
Date: Lic. No. 58628

BOGART, PEDERSON & ASSOCIATES, INC.
LAND SURVEYING
CIVIL ENGINEERING
ENVIRONMENTAL SERVICES
13076 FIRST STREET, BECKER, MN 55308-9322
TEL: 763-262-9822 FAX: 763-262-9844

CEDAR RIDGE COMMUNITY LLC
CEDAR RIDGE COMMUNITY
City of North Branch, Chisago County, MN

FALK AVE (STREET & STORM)

SHEET NO.
C5.2

LEGEND:

- PROPOSED RIP RAP
- 984 PROPOSED CONTOUR
- PROPOSED STORM SEWER
- PROPOSED WATER LINE
- PROPOSED SANITARY SEWER
- W PROPOSED WATER SERVICE
- S PROPOSED SANITARY SERVICE
- PROPOSED CATCH BASIN
- PROPOSED FLARED END SECITON
- D PROPOSED STORM MANHOLE
- PROPOSED GATE VALVE & BOX
- PROPOSED HYDRANT
- S PROPOSED SANITARY MANHOLE

N

0' 50' 100'
SCALE: 1"=50'

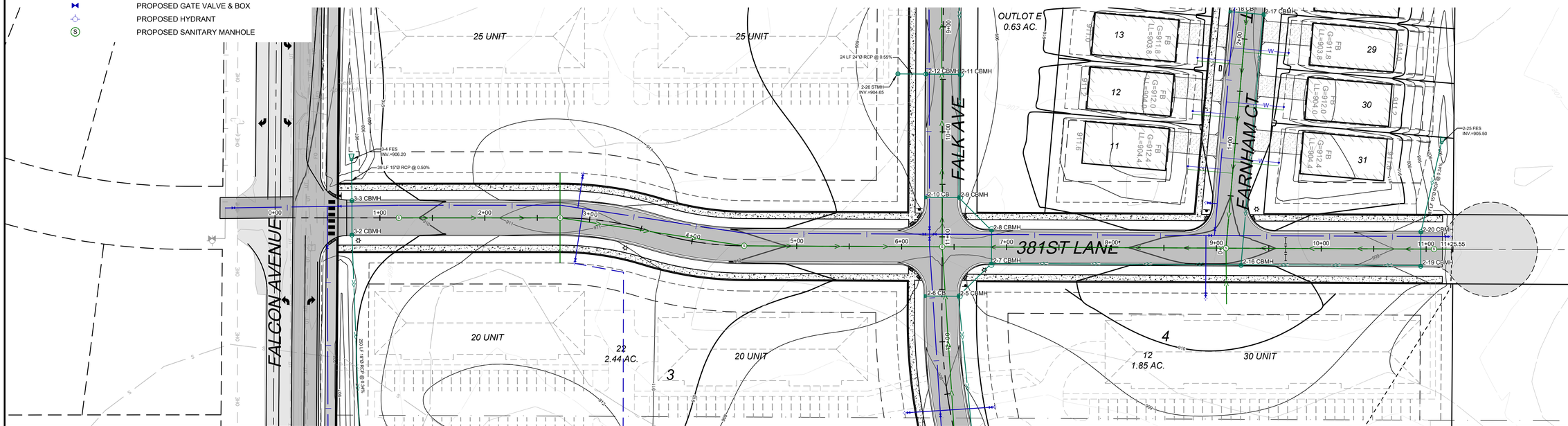

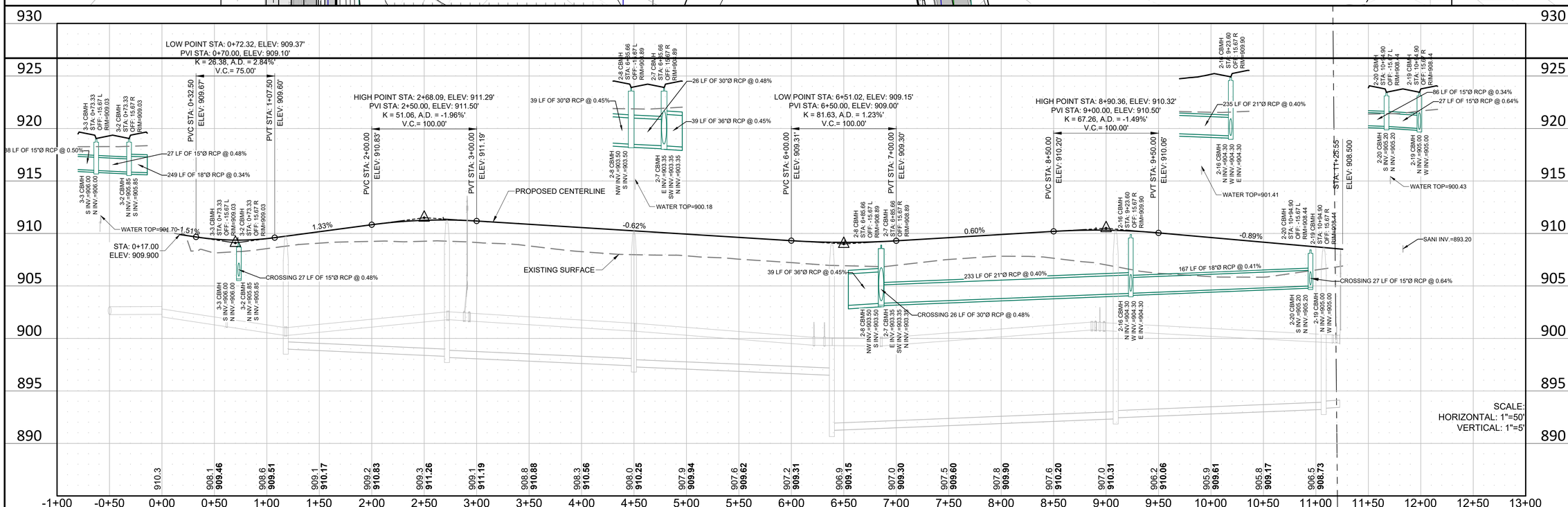

REV NO.	DATE	DESCRIPTION
1	04/01/2025	REVISION PER CITY REVIEW
2	04/24/2025	REVISION PER CITY REVIEW

DATE: 04/24/2025
DESIGN BY: MJM
DRAWN BY: MJM
CHECKED BY: CJD
DWG FILE: GRADING
FILE NO.: 22-0030.00

I hereby certify that this plan, specification, or report was prepared by me or under my direct supervision and that I am a duly Licensed Professional Engineer under the laws of the State of Minnesota.

NOT FOR CONSTRUCTION

Signed: Christopher J. Dahn
Date: Lic. No. 58628

BOGART, PEDERSON & ASSOCIATES, INC.
LAND SURVEYING
CIVIL ENGINEERING
ENVIRONMENTAL SERVICES
13076 FIRST STREET, BECKER, MN 55308-9322
TEL: 763-262-9822 FAX: 763-262-9844

CEDAR RIDGE COMMUNITY LLC
CEDAR RIDGE COMMUNITY
City of North Branch, Chisago County, MN

381ST LANE (STREET & STORM)

SHEET NO.
C5.3

N:\Projects Current\22-0030.02 Becker North Branch Plat\Civil\CAD Files\NB Utility.dwg
4/24/2025 3:09 PM

SCALE: 1"=50'

LEGEND:

- PROPOSED RIP RAP
- 984 PROPOSED CONTOUR
- PROPOSED STORM SEWER
- PROPOSED WATER LINE
- PROPOSED SANITARY SEWER
- W PROPOSED WATER SERVICE
- S PROPOSED SANITARY SERVICE
- PROPOSED CATCH BASIN
- PROPOSED FLARED END SECITON
- D PROPOSED STORM MANHOLE
- PROPOSED GATE VALVE & BOX
- PROPOSED HYDRANT
- S PROPOSED SANITARY MANHOLE

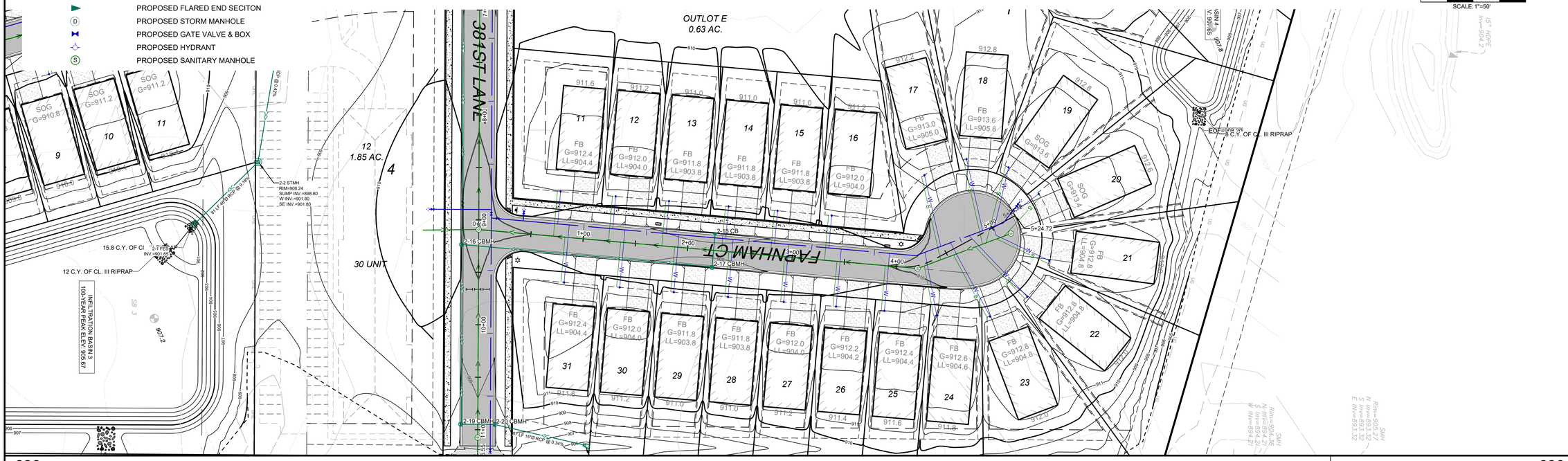

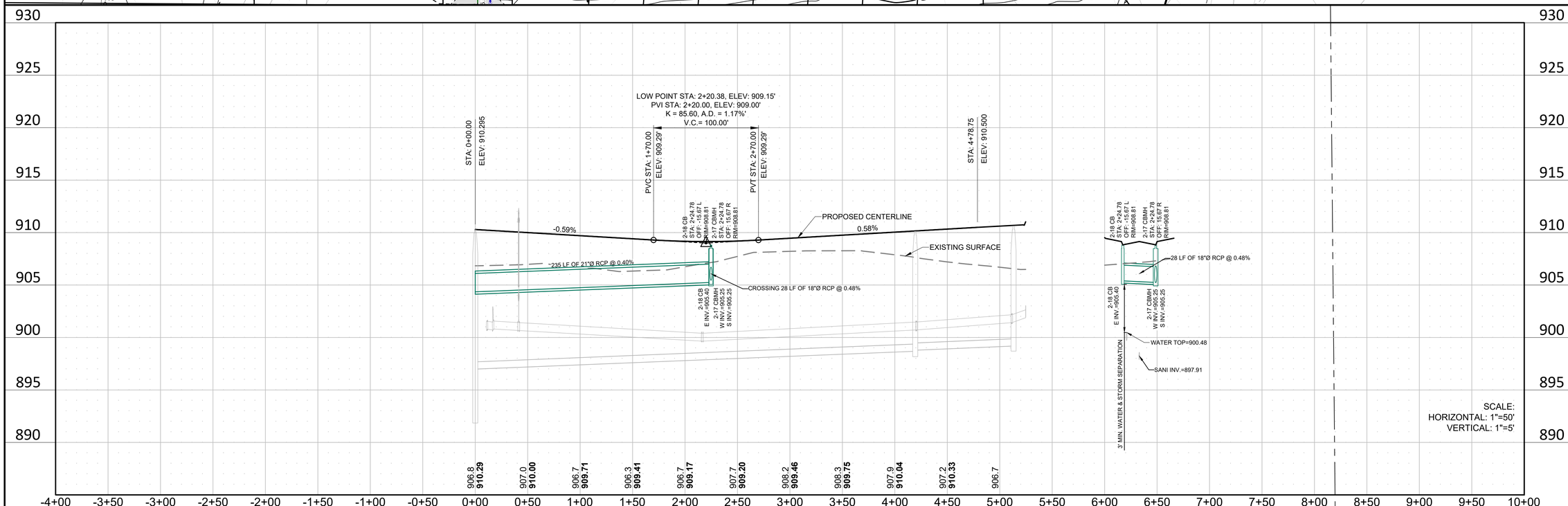

REV NO.	DATE	DESCRIPTION
1	04/01/2025	REVISION PER CITY REVIEW
2	04/24/2025	REVISION PER CITY REVIEW

DATE: 04/24/2025
DESIGN BY: MJM
DRAWN BY: MJM
CHECKED BY: CJD
DWG FILE: GRADING
FILE NO.: 22-0030.00

I hereby certify that this plan, specification, or report was prepared by me or under my direct supervision and that I am a duly Licensed Professional Engineer under the laws of the State of Minnesota.

NOT FOR CONSTRUCTION

Signed: Christopher J. Dahn
Date: Lic. No. 58628

BOGART, PEDERSON & ASSOCIATES, INC.
LAND SURVEYING
CIVIL ENGINEERING
ENVIRONMENTAL SERVICES
13076 FIRST STREET, BECKER, MN 55308-9322
TEL: 763-262-9822 FAX: 763-262-9844

CEDAR RIDGE COMMUNITY LLC
CEDAR RIDGE COMMUNITY
City of North Branch, Chisago County, MN

FARNHAM CT (STREET & STORM)

SHEET NO.
C5.4

N:\Projects Current\22-0030.02 Belden North Branch Plat\Civil\CAD Files\NB Utility.dwg 4/24/2025 3:09 PM

LEGEND:

- PROPOSED RIP RAP
- 984 PROPOSED CONTOUR
- PROPOSED STORM SEWER
- PROPOSED WATER LINE
- PROPOSED SANITARY SEWER
- W PROPOSED WATER SERVICE
- S PROPOSED SANITARY SERVICE
- PROPOSED CATCH BASIN
- PROPOSED FLARED END SECITON
- D PROPOSED STORM MANHOLE
- PROPOSED GATE VALVE & BOX
- PROPOSED HYDRANT
- S PROPOSED SANITARY MANHOLE

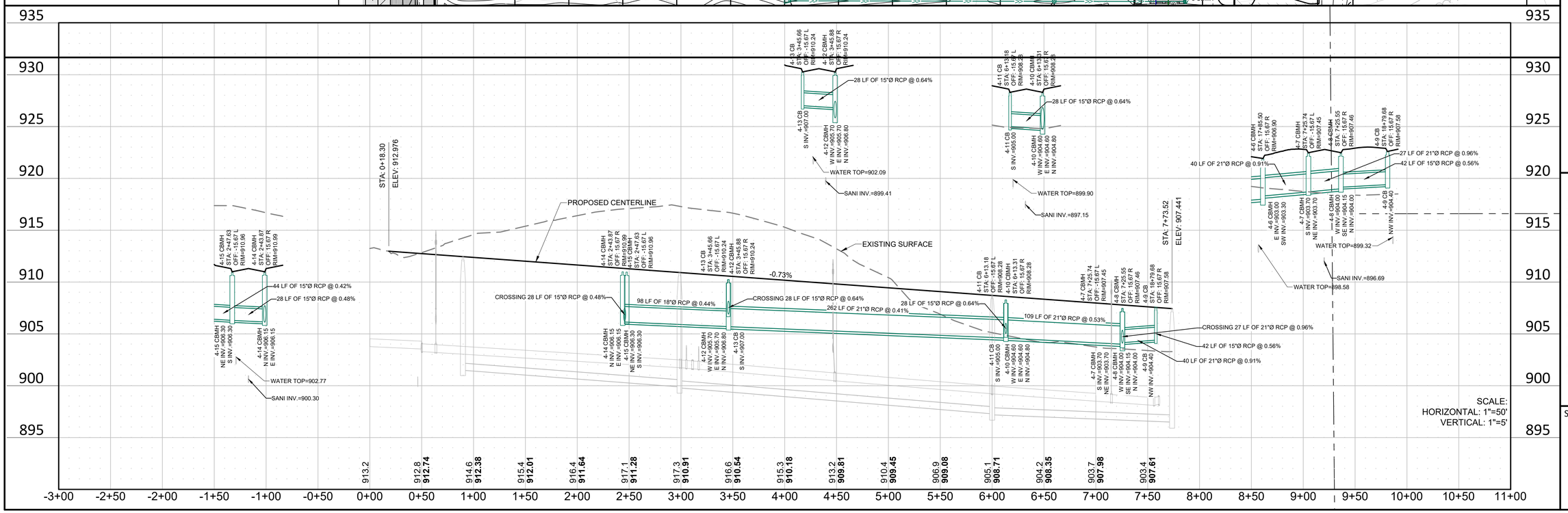

REV NO.	DATE	DESCRIPTION
1	04/01/2025	REVISION PER CITY REVIEW
2	04/24/2025	REVISION PER CITY REVIEW

DATE:	04/24/2025
DESIGN BY:	MJM
DRAWN BY:	MJM
CHECKED BY:	CJD
DWG FILE:	GRADING
FILE NO.:	22-0030.00

I hereby certify that this plan, specification, or report was prepared by me or under my direct supervision and that I am a duly Licensed Professional Engineer under the laws of the State of Minnesota.

Signed: Christopher J. Dahn

Date: Lic. No. 58628

NOT FOR CONSTRUCTION

BOGART, PEDERSON & ASSOCIATES, INC.
LAND SURVEYING
CIVIL ENGINEERING
ENVIRONMENTAL SERVICES
13076 FIRST STREET, BECKER, MN 55308-9322
TEL: 763-262-9822 FAX: 763-262-9844

CEDAR RIDGE COMMUNITY LLC
CEDAR RIDGE COMMUNITY
City of North Branch, Chisago County, MN

379TH STREET (STREET & STORM)

SHEET NO.

C5.5

LEGEND:

- PROPOSED RIP RAP
- 984 PROPOSED CONTOUR
- PROPOSED STORM SEWER
- PROPOSED WATER LINE
- PROPOSED SANITARY SEWER
- W PROPOSED WATER SERVICE
- S PROPOSED SANITARY SERVICE
- PROPOSED CATCH BASIN
- PROPOSED FLARED END SECITON
- D PROPOSED STORM MANHOLE
- PROPOSED GATE VALVE & BOX
- PROPOSED HYDRANT
- S PROPOSED SANITARY MANHOLE

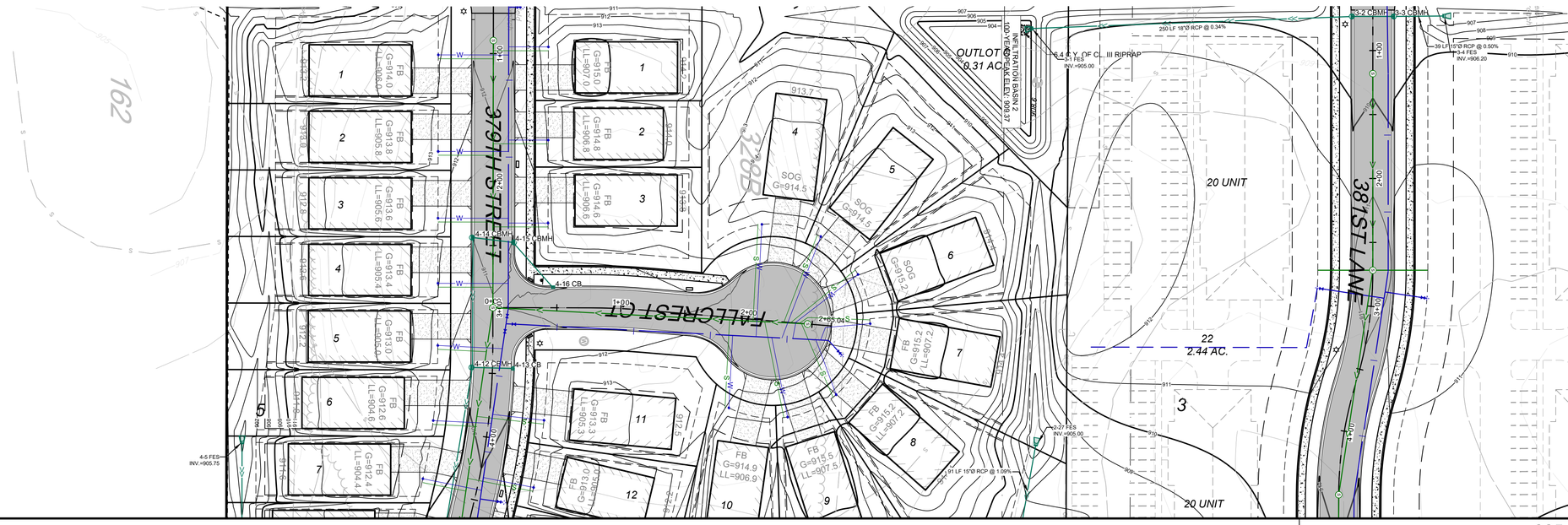

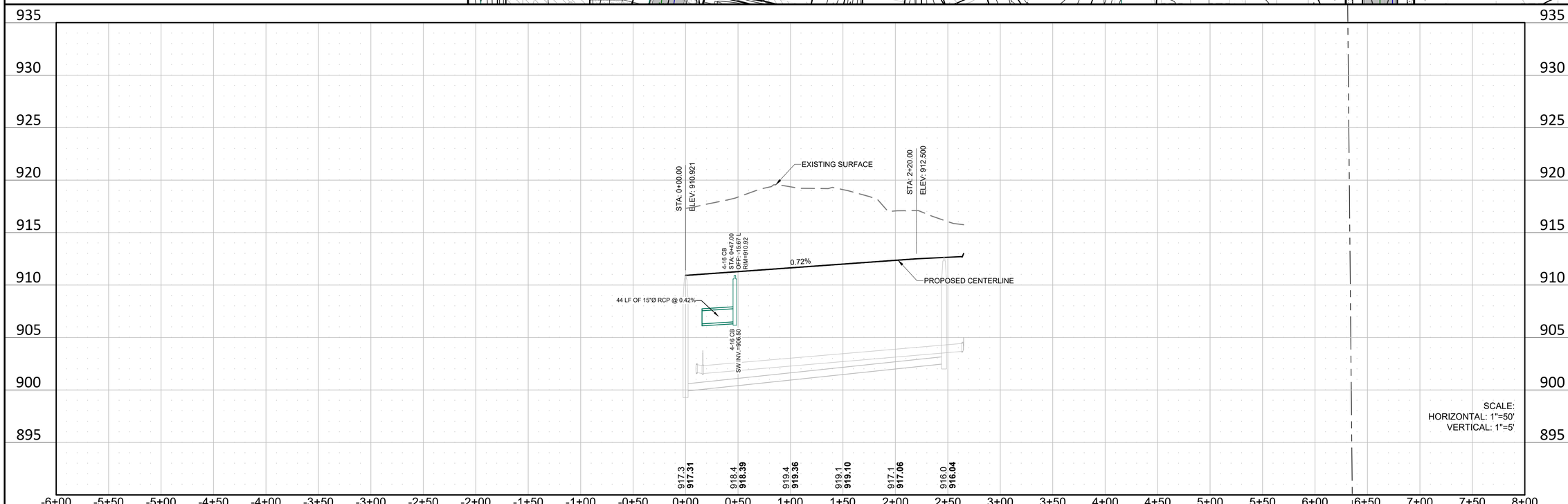

REV NO.	DATE	DESCRIPTION
1	04/01/2025	REVISION PER CITY REVIEW
2	04/24/2025	REVISION PER CITY REVIEW

DATE: 04/24/2025
DESIGN BY: MJM
DRAWN BY: MJM
CHECKED BY: CJD
DWG FILE: GRADING
FILE NO.: 22-0030.00

I hereby certify that this plan, specification, or report was prepared by me or under my direct supervision and that I am a duly Licensed Professional Engineer under the laws of the State of Minnesota.

NOT FOR CONSTRUCTION

Signed: Christopher J. Dahn
Date: Lic. No. 58628

BOGART, PEDERSON & ASSOCIATES, INC.
LAND SURVEYING
CIVIL ENGINEERING
ENVIRONMENTAL SERVICES
13076 FIRST STREET, BECKER, MN 55308-9322
TEL: 763-262-9822 FAX: 763-262-9844

CEDAR RIDGE COMMUNITY LLC
CEDAR RIDGE COMMUNITY
City of North Branch, Chisago County, MN

FALLCREST CT (STREET & STORM)

SHEET NO.
C5.6

N:\Projects Current\22-0030.02 Belden North Branch Plat\Civil\CAD Files\NB Utility.dwg 4/24/2025 3:10 PM

LEGEND:

- PROPOSED RIP RAP
- PROPOSED CONTOUR
- PROPOSED STORM SEWER
- PROPOSED WATER LINE
- PROPOSED SANITARY SEWER
- PROPOSED WATER SERVICE
- PROPOSED SANITARY SERVICE
- PROPOSED CATCH BASIN
- PROPOSED FLARED END SECITON
- PROPOSED STORM MANHOLE
- PROPOSED GATE VALVE & BOX
- PROPOSED HYDRANT
- PROPOSED SANITARY MANHOLE

0' 50' 100'
SCALE: 1"=50'

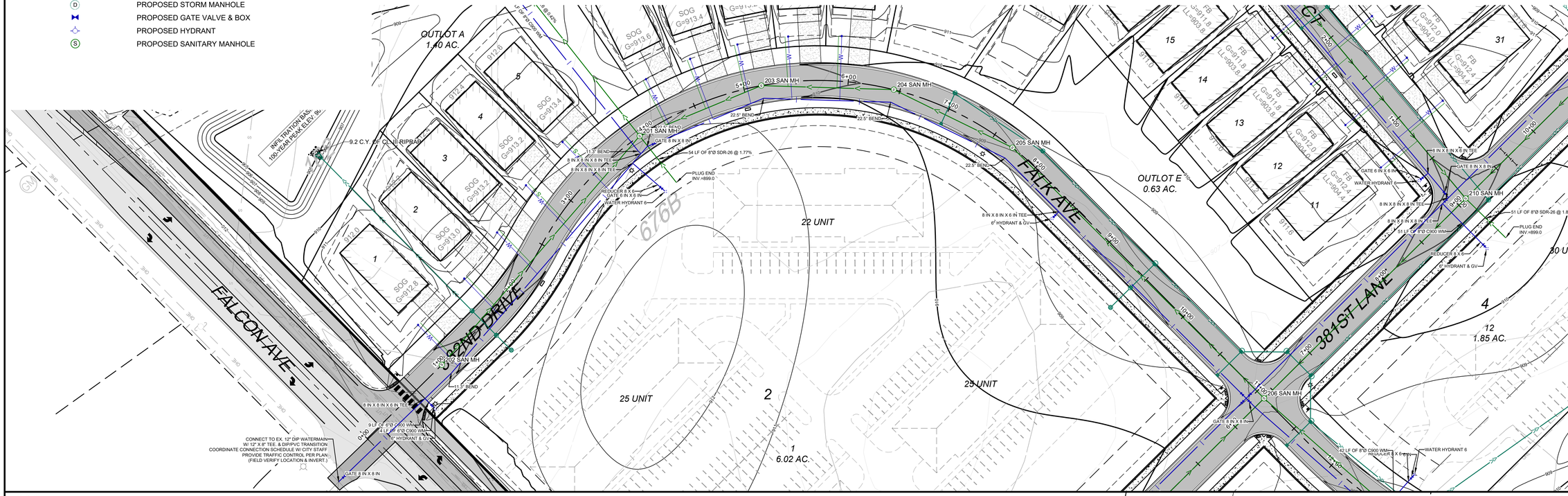

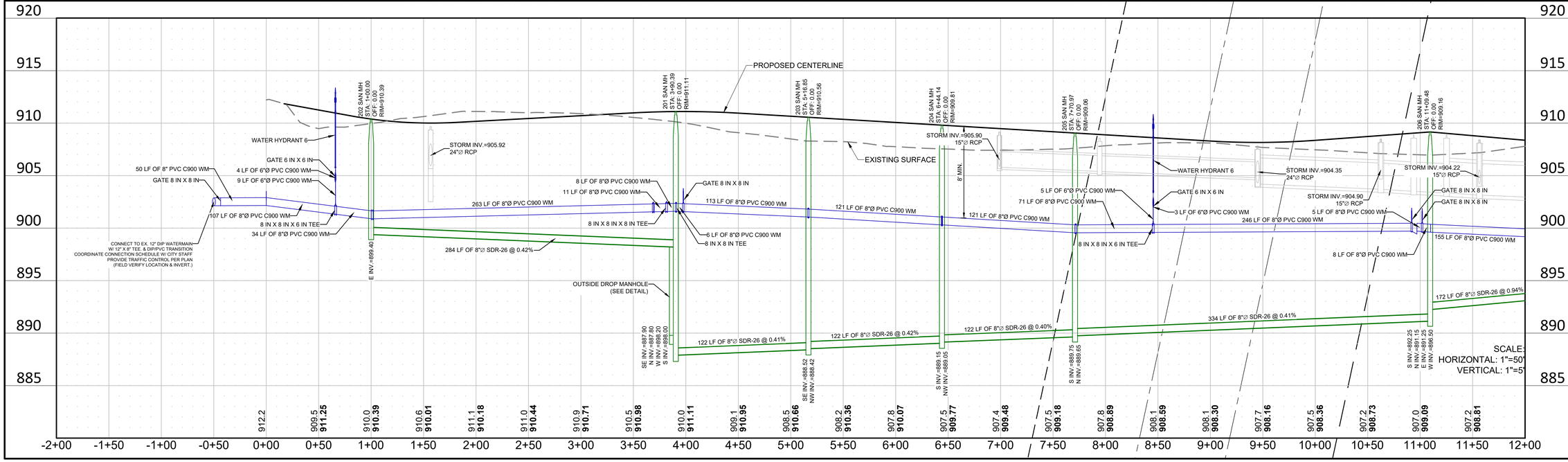

REV NO.	DATE	DESCRIPTION
1	04/01/2025	REVISION PER CITY REVIEW
2	04/24/2025	REVISION PER CITY REVIEW

DATE: 04/24/2025
DESIGN BY: MJM
DRAWN BY: MJM
CHECKED BY: CJD
DWG FILE: GRADING
FILE NO.: 22-0030.00

I hereby certify that this plan, specification, or report was prepared by me or under my direct supervision and that I am a duly Licensed Professional Engineer under the laws of the State of Minnesota.

NOT FOR CONSTRUCTION

Signed: Christopher J. Dahn
Date: Lic. No. 58628

BOGART, PEDERSON & ASSOCIATES, INC.
LAND SURVEYING
CIVIL ENGINEERING
ENVIRONMENTAL SERVICES
13076 FIRST STREET, BECKER, MN 55308-9322
TEL: 763-262-3822 FAX: 763-262-3844

CEDAR RIDGE COMMUNITY LLC
CEDAR RIDGE COMMUNITY
City of North Branch, Chisago County, MN

382ND & FALK AVE (SANI. & WATER)

SHEET NO.
C6.1

N:\Projects Current\22-0030.00 Becker North Branch Plat\Civil\CAD Files\NB Utility.dwg
4/24/2025 3:10 PM

LEGEND:

- PROPOSED RIP RAP
- 984 PROPOSED CONTOUR
- PROPOSED STORM SEWER
- PROPOSED WATER LINE
- PROPOSED SANITARY SEWER
- W PROPOSED WATER SERVICE
- S PROPOSED SANITARY SERVICE
- PROPOSED CATCH BASIN
- PROPOSED FLARED END SECITON
- D PROPOSED STORM MANHOLE
- PROPOSED GATE VALVE & BOX
- PROPOSED HYDRANT
- S PROPOSED SANITARY MANHOLE

N

0' 50' 100'

SCALE: 1"=50'

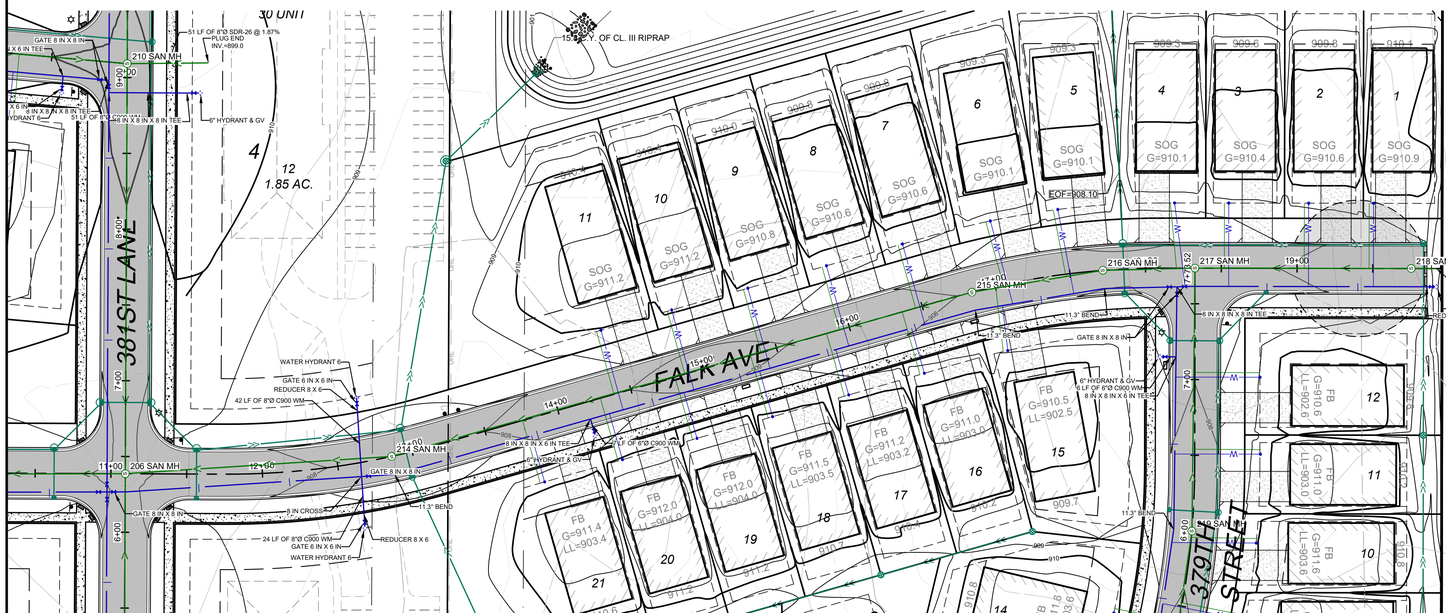

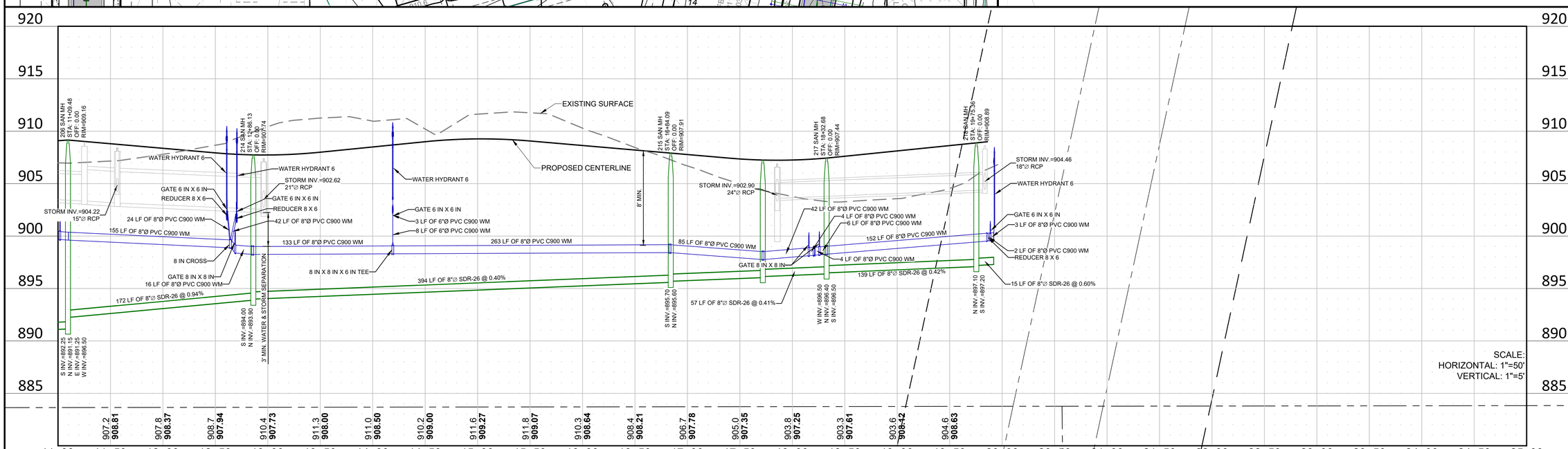

REV NO.	DATE	DESCRIPTION
1	04/01/2025	REVISION PER CITY REVIEW
2	04/24/2025	REVISION PER CITY REVIEW

DATE: 04/24/2025
DESIGN BY: MJM
DRAWN BY: MJM
CHECKED BY: CJD
DWG FILE: GRADING
FILE NO.: 22-0030.00

I hereby certify that this plan, specification, or report was prepared by me or under my direct supervision and that I am a duly Licensed Professional Engineer under the laws of the State of Minnesota.

NOT FOR CONSTRUCTION

Signed: Christopher J. Dahn
Date: Lic. No. 58628

BOGART, PEDERSON & ASSOCIATES, INC.
LAND SURVEYING
CIVIL ENGINEERING
ENVIRONMENTAL SERVICES
13079 FIRST STREET, BECKER, MN 55308-9322
TEL: 763-262-9822 FAX: 763-262-9844

CEDAR RIDGE COMMUNITY LLC
CEDAR RIDGE COMMUNITY
City of North Branch, Chisago County, MN

FALK AVE (SANI. & WATER)

SHEET NO.
C6.2

N:\Projects Current\22-0030.00 Becker North Branch Plat\Civil\CAD Files\Utility.dwg
4/24/2025 3:10 PM

LEGEND:

- PROPOSED RIP RAP
- 984 PROPOSED CONTOUR
- PROPOSED STORM SEWER
- PROPOSED WATER LINE
- PROPOSED SANITARY SEWER
- W PROPOSED WATER SERVICE
- S PROPOSED SANITARY SERVICE
- PROPOSED CATCH BASIN
- PROPOSED FLARED END SECITON
- D PROPOSED STORM MANHOLE
- PROPOSED GATE VALVE & BOX
- PROPOSED HYDRANT
- S PROPOSED SANITARY MANHOLE

N

0' 50' 100'

SCALE: 1"=50'

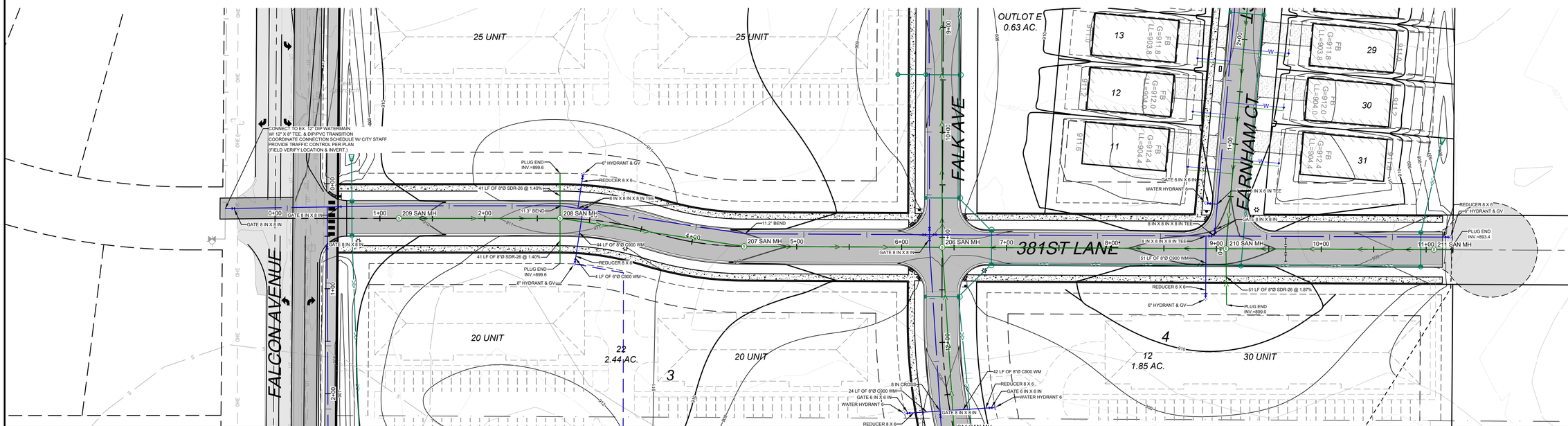

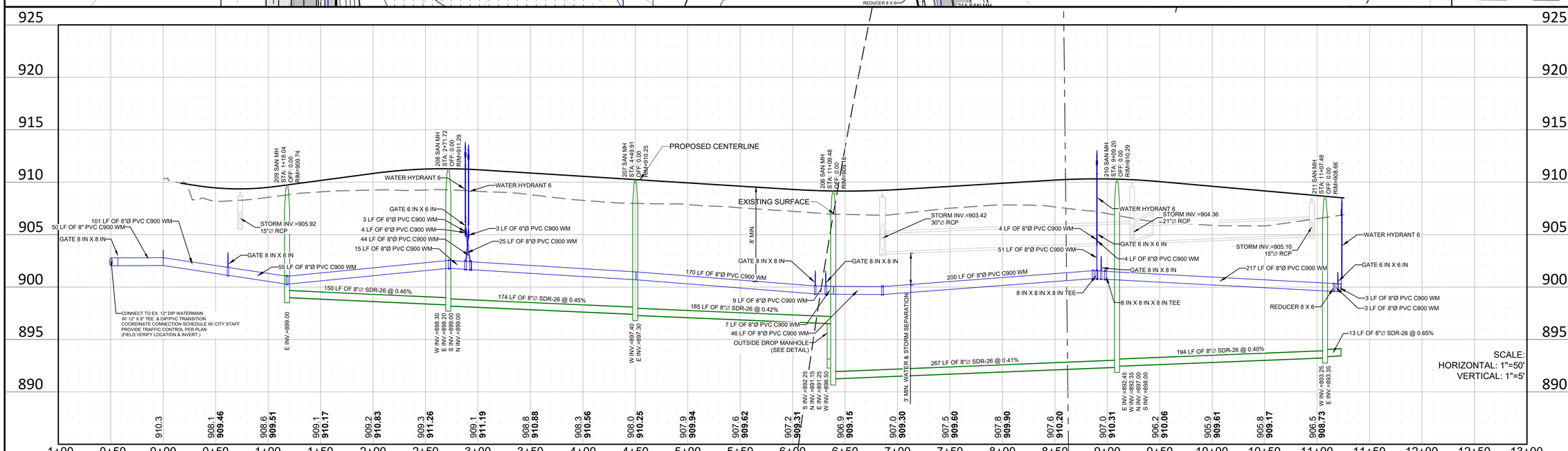

REV NO.	DATE	DESCRIPTION
1	04/01/2025	REVISION PER CITY REVIEW
2	04/24/2025	REVISION PER CITY REVIEW

DATE: 04/24/2025
DESIGN BY: MJM
DRAWN BY: MJM
CHECKED BY: CJD
DWG FILE: GRADING
FILE NO.: 22-0030.00

I hereby certify that this plan, specification, or report was prepared by me or under my direct supervision and that I am a duly Licensed Professional Engineer under the laws of the State of Minnesota.

Signed: Christopher J. Dahn
Date: Lic. No. 58628

NOT FOR CONSTRUCTION

BOGART, PEDERSON & ASSOCIATES, INC.
LAND SURVEYING
CIVIL ENGINEERING
ENVIRONMENTAL SERVICES
13079 FIRST STREET BECKER, MN 55308-9322
TEL: 763-262-3822 FAX: 763-262-3844

CEDAR RIDGE COMMUNITY LLC
CEDAR RIDGE COMMUNITY
City of North Branch, Chisago County, MN

381ST LANE (SANI. & WATER)

SHEET NO.
C6.3

LEGEND:

- PROPOSED RIP RAP
- 984 PROPOSED CONTOUR
- PROPOSED STORM SEWER
- PROPOSED WATER LINE
- PROPOSED SANITARY SEWER
- W PROPOSED WATER SERVICE
- S PROPOSED SANITARY SERVICE
- PROPOSED CATCH BASIN
- PROPOSED FLARED END SECITON
- D PROPOSED STORM MANHOLE
- PROPOSED GATE VALVE & BOX
- PROPOSED HYDRANT
- S PROPOSED SANITARY MANHOLE

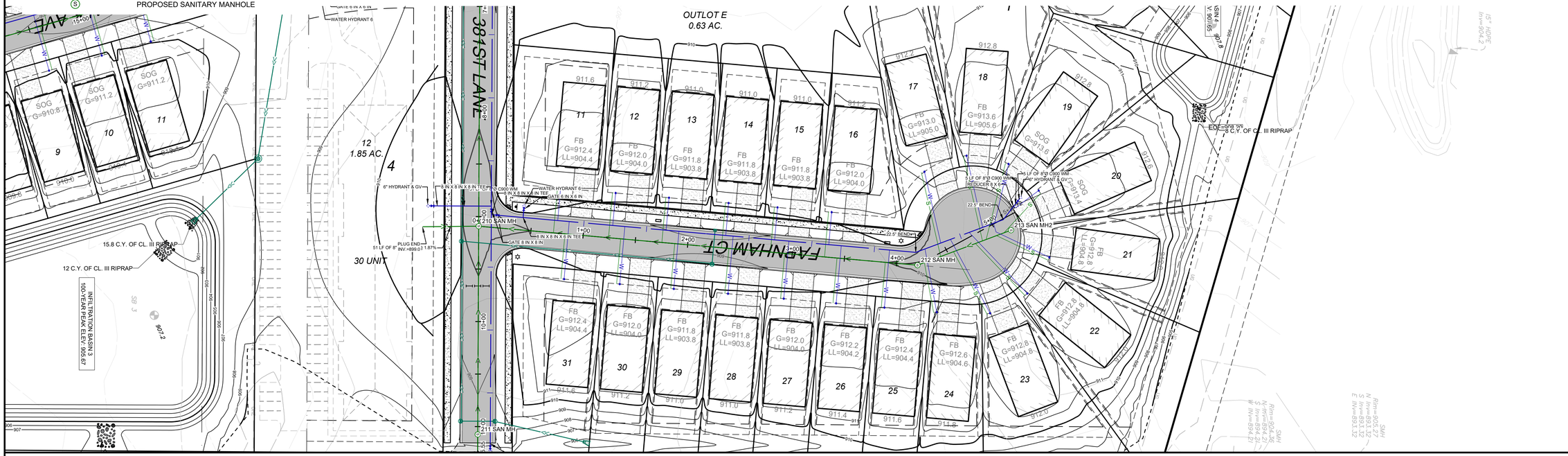

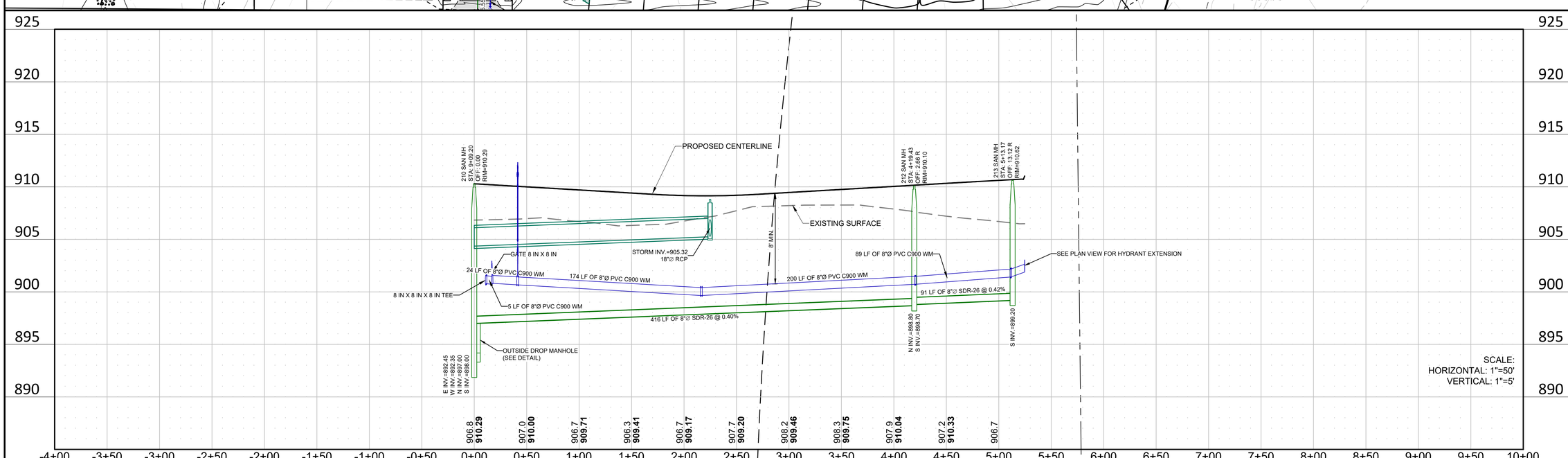

REV NO.	DATE	DESCRIPTION
1	04/01/2025	REVISION PER CITY REVIEW
2	04/24/2025	REVISION PER CITY REVIEW

DATE: 04/24/2025
DESIGN BY: MJM
DRAWN BY: MJM
CHECKED BY: CJD
DWG FILE: GRADING
FILE NO.: 22-0030.00

I hereby certify that this plan, specification, or report was prepared by me or under my direct supervision and that I am a duly Licensed Professional Engineer under the laws of the State of Minnesota.

NOT FOR CONSTRUCTION

Signed: Christopher J. Dahn
Date: Lic. No. 58628

BOGART, PEDERSON & ASSOCIATES, INC.
LAND SURVEYING
CIVIL ENGINEERING
ENVIRONMENTAL SERVICES
13076 FIRST STREET, BECKER, MN 55308-9322
TEL: 763-262-9822 FAX: 763-262-9844

CEDAR RIDGE COMMUNITY LLC
CEDAR RIDGE COMMUNITY
City of North Branch, Chisago County, MN

FARNHAM CT (SANI. & WATER)

SHEET NO.
C6.4

N:\Projects Current\22-0030.02 Bellaire North Branch Plat\Civil\CAD Files\NB Utility.dwg
4/24/2025 3:11 PM

LEGEND:

- PROPOSED RIP RAP
- 984 PROPOSED CONTOUR
- PROPOSED STORM SEWER
- PROPOSED WATER LINE
- PROPOSED SANITARY SEWER
- W PROPOSED WATER SERVICE
- S PROPOSED SANITARY SERVICE
- PROPOSED CATCH BASIN
- PROPOSED FLARED END SECITON
- D PROPOSED STORM MANHOLE
- PROPOSED GATE VALVE & BOX
- PROPOSED HYDRANT
- S PROPOSED SANITARY MANHOLE

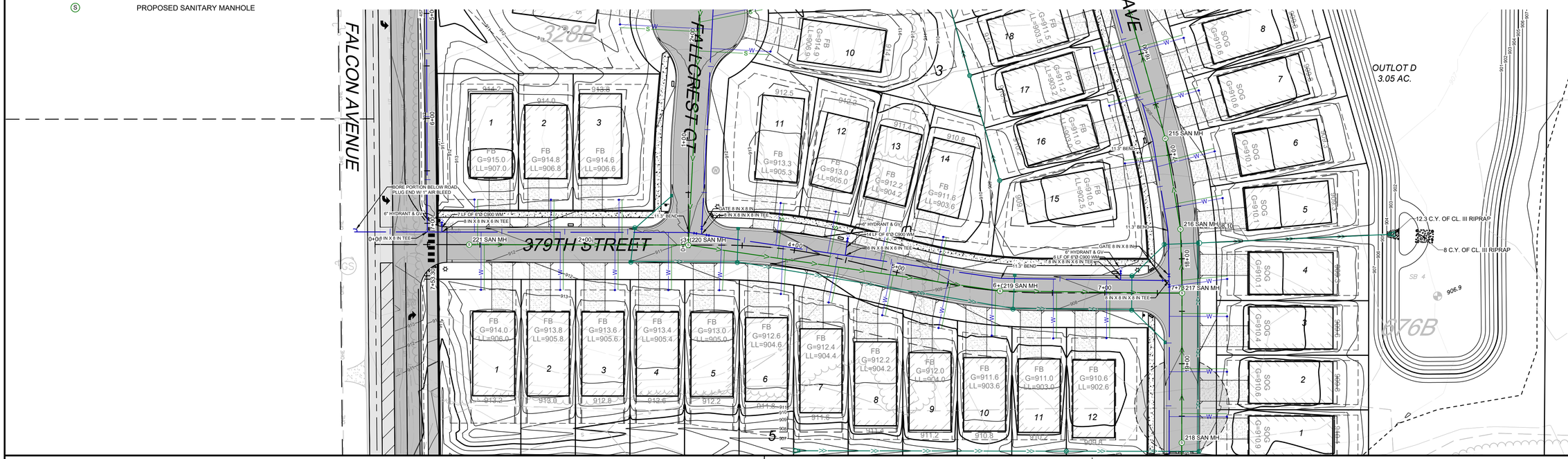

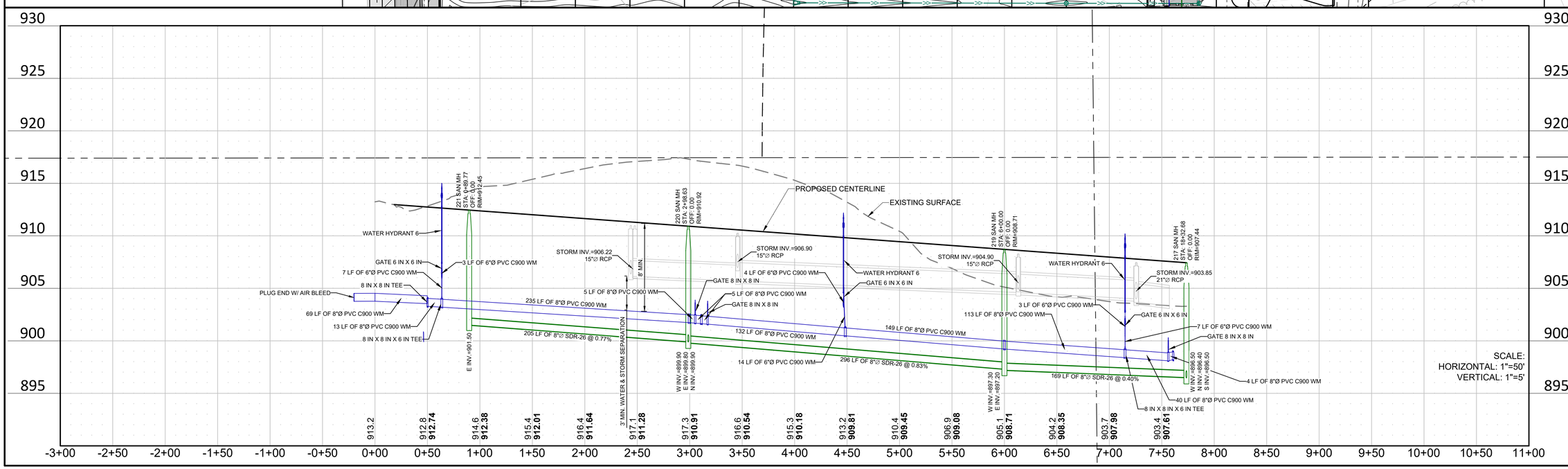

REV NO.	DATE	DESCRIPTION
1	04/01/2025	REVISION PER CITY REVIEW
2	04/24/2025	REVISION PER CITY REVIEW

DATE: 04/24/2025
DESIGN BY: MJM
DRAWN BY: MJM
CHECKED BY: CJD
DWG FILE: GRADING
FILE NO.: 22-0030.00

I hereby certify that this plan, specification, or report was prepared by me or under my direct supervision and that I am a duly Licensed Professional Engineer under the laws of the State of Minnesota.

Signed: Christopher J. Dahn
Date: Lic. No. 58628

NOT FOR CONSTRUCTION

BOGART, PEDERSON & ASSOCIATES, INC.
LAND SURVEYING
CIVIL ENGINEERING
ENVIRONMENTAL SERVICES
13079 FIRST STREET, BECKER, MN 55308-9322
TEL: 763-262-9822 FAX: 763-262-9844

CEDAR RIDGE COMMUNITY LLC
CEDAR RIDGE COMMUNITY
City of North Branch, Chisago County, MN

379TH STREET (SANI. & WATER)

SHEET NO.
C6.5

N:\Projects Current\22-0030.00 Belzer North Branch Pine\Civil\CAD Files\NB Utility.dwg 4/24/2025 3:11 PM

LEGEND:

- PROPOSED RIP RAP
- 984 PROPOSED CONTOUR
- PROPOSED STORM SEWER
- PROPOSED WATER LINE
- PROPOSED SANITARY SEWER
- W PROPOSED WATER SERVICE
- S PROPOSED SANITARY SERVICE
- PROPOSED CATCH BASIN
- PROPOSED FLARED END SECITON
- D PROPOSED STORM MANHOLE
- PROPOSED GATE VALVE & BOX
- PROPOSED HYDRANT
- S PROPOSED SANITARY MANHOLE

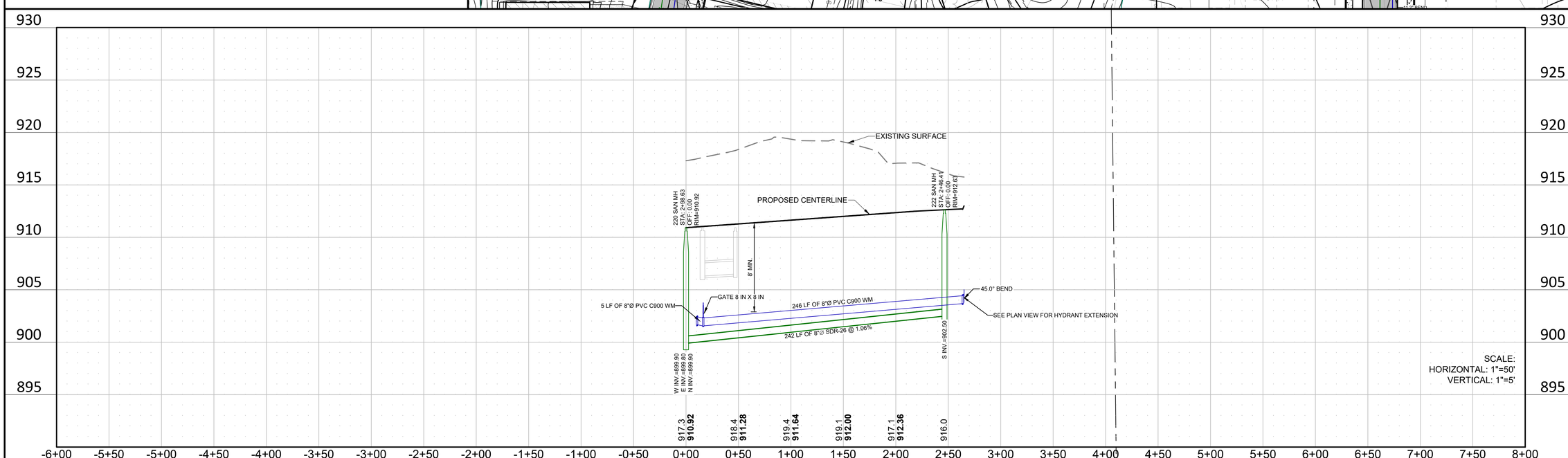

REV NO.	DATE	DESCRIPTION
1	04/01/2025	REVISION PER CITY REVIEW
2	04/24/2025	REVISION PER CITY REVIEW

DATE: 04/24/2025
DESIGN BY: MJM
DRAWN BY: MJM
CHECKED BY: CJD
DWG FILE: GRADING
FILE NO.: 22-0030.00

I hereby certify that this plan, specification, or report was prepared by me or under my direct supervision and that I am a duly Licensed Professional Engineer under the laws of the State of Minnesota.

Signed: Christopher J. Dahn
Date: Lic. No. 58628

NOT FOR CONSTRUCTION

BOGART, PEDERSON & ASSOCIATES, INC.
LAND SURVEYING
CIVIL ENGINEERING
ENVIRONMENTAL SERVICES
13076 FIRST STREET, BECKER, MN 55308-9322
TEL: 763-262-9822 FAX: 763-262-9844

CEDAR RIDGE COMMUNITY LLC
CEDAR RIDGE COMMUNITY
City of North Branch, Chisago County, MN

FALLCREST CT (SANI. & WATER)

SHEET NO.
C6.6

4/24/2025 3:11 PM N:\Projects Current\22-0030.00 Becker North Branch Plat\Civil\CAD Files\NB Utility.dwg

LEGEND:

- PROPOSED RIP RAP
- 984 PROPOSED CONTOUR
- PROPOSED STORM SEWER
- PROPOSED WATER LINE
- PROPOSED SANITARY SEWER
- W PROPOSED WATER SERVICE
- S PROPOSED SANITARY SERVICE
- PROPOSED CATCH BASIN
- PROPOSED FLARED END SECITON
- D PROPOSED STORM MANHOLE
- PROPOSED GATE VALVE & BOX
- PROPOSED HYDRANT
- S PROPOSED SANITARY MANHOLE

N

0' 50' 100'

SCALE: 1"=50'

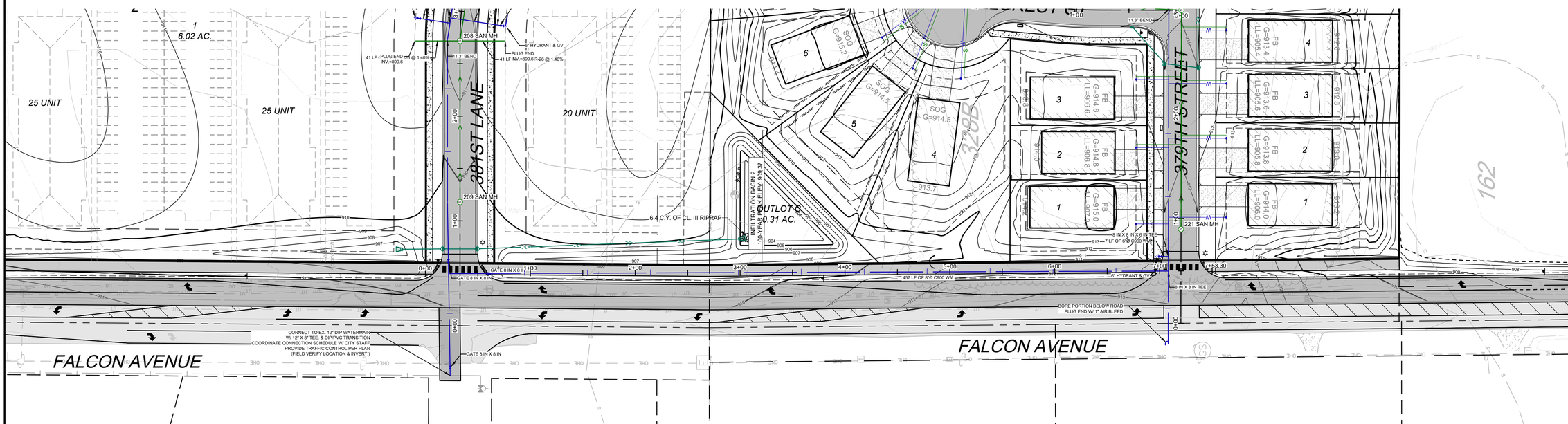

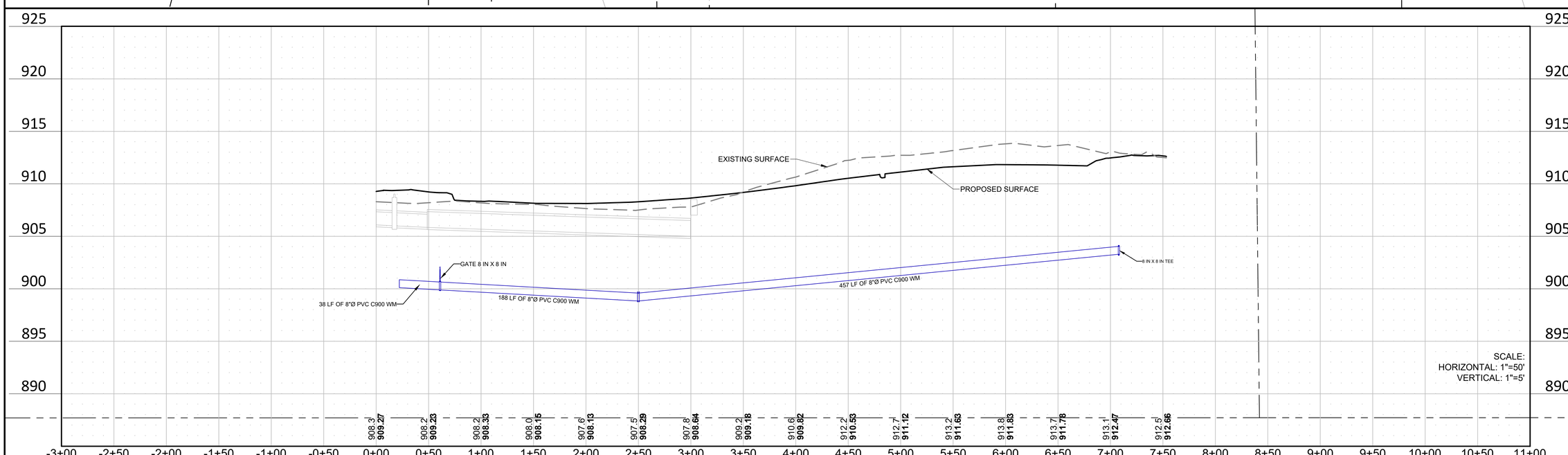

REV NO.	DATE	DESCRIPTION
1	04/01/2025	REVISION PER CITY REVIEW
2	04/24/2025	REVISION PER CITY REVIEW

DATE: 04/24/2025
DESIGN BY: MJM
DRAWN BY: MJM
CHECKED BY: CJD
DWG FILE: GRADING
FILE NO.: 22-0030.00

I hereby certify that this plan, specification, or report was prepared by me or under my direct supervision and that I am a duly Licensed Professional Engineer under the laws of the State of Minnesota.

NOT FOR CONSTRUCTION

Signed: Christopher J. Dahn

Date: Lic. No. 58628

BOGART, PEDERSON & ASSOCIATES, INC.
LAND SURVEYING
CIVIL ENGINEERING
ENVIRONMENTAL SERVICES
13079 FIRST STREET, BECKER, MN 55308-9322
TEL: 763-262-9622 FAX: 763-262-9644

CEDAR RIDGE COMMUNITY LLC
CEDAR RIDGE COMMUNITY
City of North Branch, Chisago County, MN

FALCON AVENUE N (WATER)

SHEET NO.

C6.7

N:\Projects Current\22-0030.02 Belzer North Branch Plat\Civil\CAD Files\NB Utility.dwg 4/24/2025 3:11 PM

CEDAR RIDGE COMMUNITY SERVICE INFORMATION

Lot Design			Elevation Information		Sanitary Service							
Block	Lot	House Type	Basement	Street	Wye Sta.	Dist. From Down MH	Main Inv.	Length	Riser Height	End Inv.	Basement to End Inv.	Diam. & Mat.
1	1	SOG	912.8	382ND DRIVE	1+13.2	272	899.34	42.0	**2**	902.85	9.95	4" PVC SDR-26
1	2	SOG	913.0	382ND DRIVE	1+76.0	209	899.08	37.5	**3**	903.50	9.50	4" PVC SDR-26
1	3	SOG	913.2	382nd DRIVE	2+29.7	156	898.86	42.6	**3**	903.38	9.82	4" PVC SDR-26
1	4	SOG	913.2	382nd DRIVE	2+80.7	105	898.65	51.2	**3**	903.34	9.86	4" PVC SDR-26
1	5	SOG	913.4	382nd DRIVE	3+36.3	51	898.42	51.8	**3**	903.13	10.27	4" PVC SDR-26
1	6	SOG	913.6	382nd DRIVE	4+17.3	29	888.01	47.5	**14**	903.63	9.97	4" PVC SDR-26
1	7	SOG	913.4	382nd DRIVE	4+59.0	71	888.19	49.6	**14**	903.85	9.55	4" PVC SDR-26
1	8	SOG	913.2	382nd DRIVE	5+00.2	111	888.35	46.1	**14**	903.94	9.26	4" PVC SDR-26
1	9	SOG	912.8	382nd DRIVE	5+42.0	22	888.63	47.4	**13**	903.25	9.55	4" PVC SDR-26
1	10	SOG	912.6	382nd DRIVE	5+89.6	70	888.82	49.5	**13**	903.48	9.12	4" PVC SDR-26
1	11	FB	904.4	FARNHAM CT	0+71.5	69	897.29	43.0	0	898.82	5.58	4" PVC SDR-26
1	12	FB	904.0	FARNHAM CT	1+24.2	122	897.50	43.0	0	899.03	4.97	4" PVC SDR-26
1	13	FB	903.8	FARNHAM CT	1+75.31	172	897.71	43.0	0	899.24	4.56	4" PVC SDR-26
1	14	FB	903.8	FARNHAM CT	2+32.3	230	897.94	43.0	0	899.47	4.33	4" PVC SDR-26
1	15	FB	903.8	FARNHAM CT	2+79.1	277	898.13	43.0	0	899.66	4.14	4" PVC SDR-26
1	16	FB	904.0	FARNHAM CT	3+30.9	328	898.34	43.0	0	899.87	4.13	4" PVC SDR-26
1	17	FB	905.0	FARNHAM CT	4+42.2	21	898.90	82.1	0	901.21	3.79	4" PVC SDR-26
1	18	FB	905.6	FARNHAM CT	4+84.3	63	899.08	82.7	0	901.40	4.20	4" PVC SDR-26
1	19	SOG	913.6	FARNHAM CT	4+88.07	67	899.10	74.8	**2**	903.27	10.33	4" PVC SDR-26
1	20	SOG	913.4	FARNHAM CT	5+05.9	85	899.17	51.3	**3**	903.87	9.53	4" PVC SDR-26
1	21	FB	904.8	FARNHAM CT	4+98.5	78	899.14	54.4	0	900.90	3.90	4" PVC SDR-26
1	22	FB	904.8	FARNHAM CT	4+77.2	56	899.05	68.5	0	901.09	3.71	4" PVC SDR-26
1	23	FB	904.8	FARNHAM CT	4+55.1	34	898.96	68.0	0	900.99	3.81	4" PVC SDR-26
1	24	FB	904.6	FARNHAM CT	4+26.0	4	898.83	48.6	0	900.47	4.13	4" PVC SDR-26
1	25	FB	904.4	FARNHAM CT	3+89.1	387	898.58	43.0	0	900.11	4.29	4" PVC SDR-26
1	26	FB	904.2	FARNHAM CT	3+42.8	340	898.39	43.0	0	899.92	4.28	4" PVC SDR-26
1	27	FB	904.0	FARNHAM CT	2+92.7	290	898.19	43.0	0	899.72	4.28	4" PVC SDR-26
1	28	FB	903.8	FARNHAM CT	2+39.4	237	897.97	43.0	0	899.50	4.30	4" PVC SDR-27
1	29	FB	903.8	FARNHAM CT	1+87.5	185	897.76	43.0	0	899.29	4.51	4" PVC SDR-26
1	30	FB	904.0	FARNHAM CT	1+35.8	133	897.55	43.0	0	899.08	4.92	4" PVC SDR-26
1	31	FB	904.4	FARNHAM CT	0+82.5	80	897.33	43.0	0	898.86	5.54	4" PVC SDR-26
3	1	FB	907.0	379TH STREET	0+97.7	199	901.44	43.0	0	902.97	4.03	4" PVC SDR-26
3	2	FB	906.8	379TH STREET	1+70.5	125	900.89	43.0	0	902.42	4.38	4" PVC SDR-26
3	3	FB	906.6	379TH STREET	2+35.4	61	900.38	43.0	0	901.91	4.69	4" PVC SDR-26
3	4	SOG	914.5	FALLCREST CT	2+03.8	201	902.05	75.9	0	904.24	10.26	4" PVC SDR-26
3	5	SOG	914.5	FALLCREST CT	2+27.7	225	902.30	73.3	0	904.44	10.06	4" PVC SDR-26
3	6	SOG	915.2	FALLCREST CT	2+32.8	230	902.36	65.7	0	904.34	10.86	4" PVC SDR-26
3	7	FB	907.2	FALLCREST CT	2+39.7	237	902.46	56.8	0	904.27	2.93	4" PVC SDR-26
3	8	FB	907.2	FALLCREST CT	2+41.6	239	902.45	62.5	0	904.37	2.83	4" PVC SDR-27
3	9	FB	907.5	FALLCREST CT	2+12.9	210	902.14	76.6	0	904.34	3.16	4" PVC SDR-28
3	10	FB	906.9	FALLCREST CT	1+85.4	182	901.85	68.6	0	903.89	3.01	4" PVC SDR-29
3	11	FB	905.3	379TH STREET	3+84.8	84	899.09	52.5	0	900.81	4.49	4" PVC SDR-26
3	12	FB	905.0	379TH STREET	4+34.7	123	898.66	51.8	0	900.37	4.63	4" PVC SDR-26
3	13	FB	904.2	379TH STREET	4+85.4	183	898.25	47.7	0	899.87	4.33	4" PVC SDR-26
3	14	FB	903.6	379TH STREET	5+39.8	237	897.80	43.0	0	899.33	4.27	4" PVC SDR-26
3	15	FB	902.5	FALK AVE	17+00	13	895.76	42.0	0	897.27	5.23	4" PVC SDR-26
3	16	FB	903.0	FALK AVE	16+36.3	348	895.41	43.0	0	896.94	6.06	4" PVC SDR-27
3	17	FB	903.2	FALK AVE	15+84.3	296	895.20	43.0	0	896.73	6.47	4" PVC SDR-28
3	18	FB	903.5	FALK AVE	15+32.1	244	894.99	43.3	0	896.53	6.97	4" PVC SDR-29
3	19	FB	904.0	FALK AVE	14+80.2	191	894.78	43.4	0	896.32	7.68	4" PVC SDR-30
3	20	FB	904.0	FALK AVE	14+29.1	141	894.58	43.5	0	896.12	7.88	4" PVC SDR-31
3	21	FB	903.4	FALK AVE	13+75.6	87	894.36	43.7	0	895.90	7.50	4" PVC SDR-32
4	1	SOG	910.9	FALK AVE	19+47.5	112	896.98	43.0	**3**	901.51	9.39	4" PVC SDR-33
4	2	SOG	910.6	FALK AVE	19+04.7	68	896.80	43.0	**3**	901.33	9.27	4" PVC SDR-34
4	3	SOG	910.4	FALK AVE	18+52.0	16	896.58	43.0	**3**	901.11	9.29	4" PVC SDR-35
4	4	SOG	910.1	FALK AVE	18+20.5	46	896.35	43.5	**3**	900.89	9.21	4" PVC SDR-36
4	5	SOG	910.1	FALK AVE	17+47.3	60	895.95	44.5	**3**	900.51	9.59	4" PVC SDR-37
4	6	SOG	910.1	FALK AVE	17+05.5	416	895.79	44.5	**3**	900.35	9.75	4" PVC SDR-38
4	7	SOG	910.6	FALK AVE	16+45.4	356	895.44	43.1	**4**	900.97	9.63	4" PVC SDR-39
4	8	SOG	910.6	FALK AVE	15+93.2	303	895.24	43.0	**4**	900.77	9.83	4" PVC SDR-40
4	9	SOG	910.8	FALK AVE	15+39.3	250	895.02	42.7	**5**	901.54	9.26	4" PVC SDR-41
4	10	SOG	911.2	FALK AVE	14+87.0	198	894.81	42.6	**5**	901.33	9.87	4" PVC SDR-42
4	11	SOG	911.2	FALK AVE	14+38.5	150	894.61	42.5	**6**	902.13	9.07	4" PVC SDR-43
5	1	FB	906.0	379TH STREET	1+04.0	192	901.39	43.0	0	902.92	3.08	4" PVC SDR-44
5	2	FB	905.8	379TH STREET	1+79.5	117	900.81	43.0	0	902.34	3.46	4" PVC SDR-45
5	3	FB	905.6	379th STREET	2+31.7	64	900.42	43.0	0	901.95	3.65	4" PVC SDR-46
5	4	FB	905.4	379th STREET	2+82.6	14	900.02	43.0	0	901.55	3.85	4" PVC SDR-47
5	5	FB	905.0	379th STREET	3+33.1	263	899.51	38.0	0	900.94	4.06	4" PVC SDR-48
5	6	FB	904.6	379th STREET	3+92.8	203	899.03	34.2	0	900.38	4.22	4" PVC SDR-49
5	7	FB	904.4	379th STREET	4+44.8	153	898.59	34.2	0	899.94	4.46	4" PVC SDR-50
5	8	FB	904.2	379th STREET	4+97.1	100	898.15	38.8	0	899.60	4.60	4" PVC SDR-51
5	9	FB	904.0	379th STREET	5+52.2	45	897.69	43.0	0	899.22	4.78	4" PVC SDR-52
5	10	FB	903.6	379th STREET	5+95.5	2	897.34	43.1	0	898.87	4.73	4" PVC SDR-53
5	11	FB	903.0	379th STREET	6+53.9	116	896.98	44.6	0	898.54	4.46	4" PVC SDR-54
5	12	FB	902.6	379th STREET	7+04.7	66	896.78	43.7	0	898.32	4.28	4" PVC SDR-55

REV NO.	DATE	DESCRIPTION
1	04/01/2025	REVISION PER CITY REVIEW
2	04/24/2025	REVISION PER CITY REVIEW

DATE: 04/24/2025
DESIGN BY: MJM
DRAWN BY: MJM
CHECKED BY: CJD
DWG FILE: DETAILS
FILE NO.: 22-0030.00

I hereby certify that this plan, specification, or report was prepared by me or under my direct supervision and that I am a duly Licensed Professional Engineer under the laws of the State of Minnesota.

NOT FOR CONSTRUCTION

Signed: Christopher J. Dahn

Date: Lic. No. 58628

BOGART, PEDERSON & ASSOCIATES, INC.
LAND SURVEYING
CIVIL ENGINEERING
ENVIRONMENTAL SERVICES
13076 FIRST STREET, BECKER, MN 55308-9322
TEL: 763-262-9622 FAX: 763-262-9644

CEDAR RIDGE COMMUNITY LLC
CEDAR RIDGE COMMUNITY
City of North Branch, Chisago County, MN

SERVICE INFORMATION

SHEET NO.

C6.8

4/24/2025 3:12 PM N:\Projects Current\22-0030.02 Belzer North Branch\Plan\Civil\CAD Files\NB Cover Sht\PP9-.dwg

LEGEND:

- SAWCUT LOCATION (FULL DEPTH)
- TURN ARROW (TYPICAL)
- STRAIGHT ARROW (TYPICAL)
- PERMANENT SIGNAGE
- 980.50 TP — NEW TOP OF PAVEMENT ELEVATION

TURN LANE NOTES:

1. THE CONTRACTOR SHALL NOTE ANY DISCREPANCIES BETWEEN EXISTING CONDITIONS IN THE FIELD REPRESENTED WITHIN THE PLANS AS SHOWN AND ALERT THE ENGINEER BEFORE BIDDING THE PROJECT AND BEGINNING CONSTRUCTION.
2. CONTRACTOR SHALL LOCATE AND VERIFY ALL UTILITIES WHICH MAY AFFECT THIS WORK AND NOTIFY THE OWNER OF ANY CHANGES. CONTACT LOCAL UTILITY COMPANIES FOR EXACT LOCATIONS PRIOR TO BIDDING THE PROJECT AND COMMENCING WORK.
3. CONTRACTOR SHALL TAKE NECESSARY PRECAUTIONS TO PREVENT SILT AND DEBRIS RUN-OFF DURING GRADING OPERATIONS (I.E. SILT FENCE, STRAW BALES, ETC.).
4. CONTRACTOR SHALL VERIFY CRITICAL ELEVATIONS TO ENSURE CONFORMANCE WITH GRADING PLAN, PARTICULARLY WITH EXISTING STRUCTURES AND/OR PAVEMENTS TO REMAIN. MEET EXISTING GRADES ALONG STREETS, PROPERTY LINES, AND DRIVEWAY ENTRANCES. RESTORE ALL PAVEMENTS THAT REMAIN TO THEIR ORIGINAL IF NOT BETTER CONDITION. NOTIFY OWNER OF ANY CONFLICTS PRIOR TO BIDDING THE PROJECT.
5. LONGITUDINAL PAVEMENT MARKINGS SHALL BE LATEX PAINT. THE TURN ARROWS SHALL BE PREFORMED THERMO.
6. EXISTING CONFLICTING PAVEMENT MARKINGS WILL NEED TO BE REMOVED BEFORE FINAL PERMANENT STRIPING IS PLACED.
7. DURING CONSTRUCTION, CONFLICTING PAVEMENT MARKINGS WILL NEED TO BE COVERED WITH BLACK REMOVABLE LANE TAPE OR WATER BLASTED AND THEN HAVE PAVEMENT MARKINGS INSTALLED FOR TEMPORARY CENTERLINE DURING CONSTRUCTION.
8. ALL SIGNAGE TO MEET MASH-16 REQUIREMENTS.

0' 50' 100'
SCALE: 1"=50'

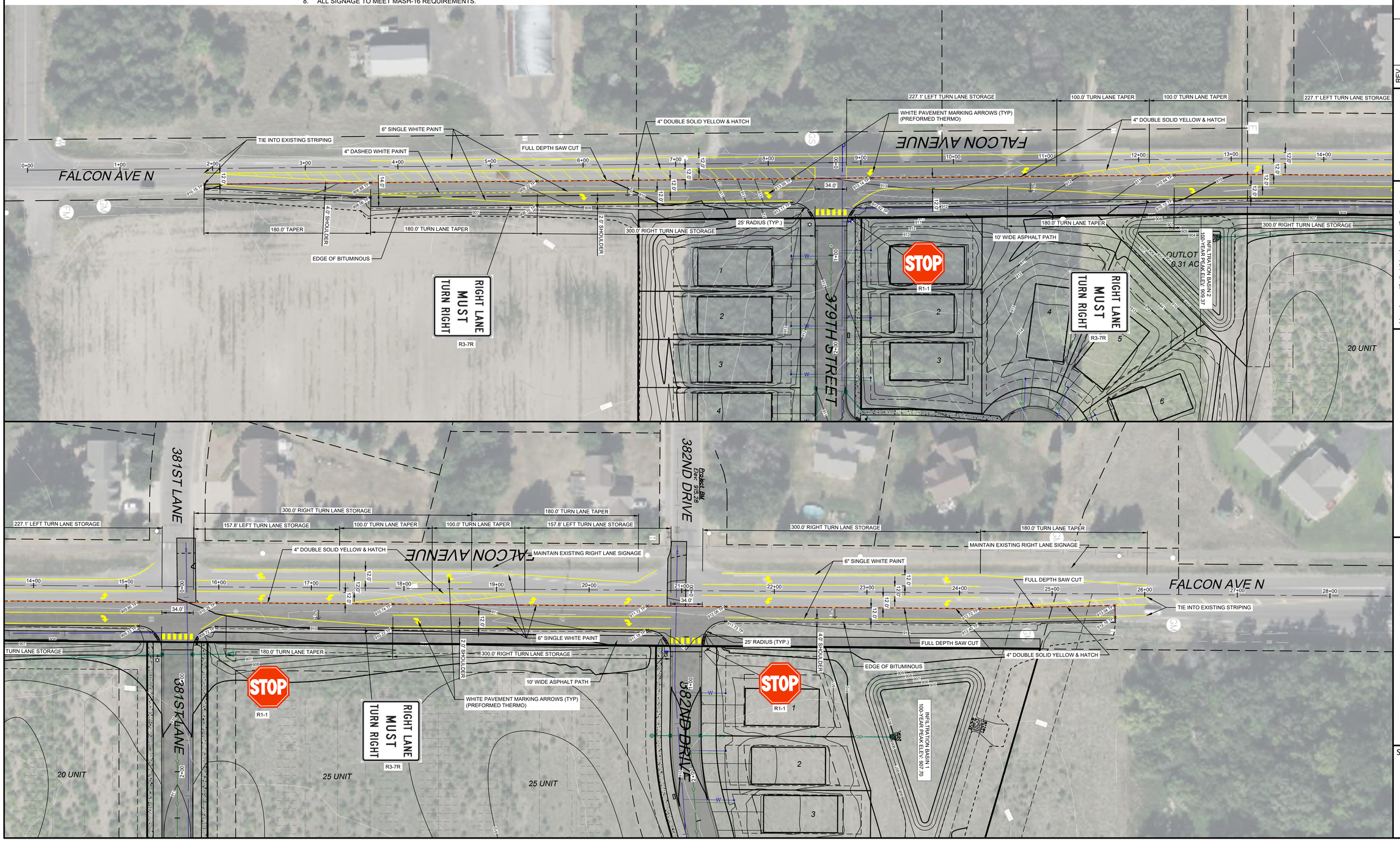

REV NO.	DATE	DESCRIPTION
1	04/01/2025	REVISION PER CITY REVIEW
2	04/24/2025	REVISION PER CITY REVIEW

DATE: 04/24/2025
DESIGN BY: MJM
DRAWN BY: MJM
CHECKED BY: CJD
DWG FILE: EROSION
FILE NO.: 22-0030.00

I hereby certify that this plan, specification, or report was prepared by me or under my direct supervision and that I am a duly Licensed Professional Engineer under the laws of the State of Minnesota.

Signed: Christopher J. Dahn
Date: Lic. No. 58628

NOT FOR CONSTRUCTION

BOGART, PEDERSON & ASSOCIATES, INC.
LAND SURVEYING
CIVIL ENGINEERING
ENVIRONMENTAL SERVICES
13076 FIRST STREET, BECKER, MN 55308-9322
TEL. 763-262-9322 FAX 763-262-3844

CEDAR RIDGE COMMUNITY LLC
CEDAR RIDGE COMMUNITY
City of North Branch, Chisago County, MN

TURN LANE PLAN

SHEET NO.
C7.1

4/24/2025 3:12 PM N:\Projects Current\22-0030.00 Belcher North Branch Plat\Civil\CAD Files\NB Turn Lane.dwg

LEGEND:

- TYPE II CHANNELIZER DRUMS
- SIGN

0' 100' 200'
SCALE: 1"=100'

TRAFFIC CONTROL PLAN NOTES:

1. SIGNS TO FOLLOW CONVENTIONAL ROAD SIZINGS (36" X 36" COMMON)
2. TRAFFIC CONTROL SHALL MEET THE MINNESOTA MANUAL ON UNIFORM TRAFFIC CONTROL.
3. ALL TEMPORARY TRAFFIC CONTROL SIGNS TO BE ON SKIDS.
4. ADDITIONAL SIGNS AND CHANNELIZERS SHALL BE SUPPLIED AND MOVED BY CONTRACTOR AS NEEDED FOR SAFE ROAD CONSTRUCTION.
5. CONTRACTOR SHALL PROVIDE ADDITIONAL TRAFFIC CONTROL SIGNS, CHANNELIZERS, AND FLAGGERS AS NEEDED.
6. EXISTING CONFLICTING PAVEMENT MARKINGS WILL NEED TO BE REMOVED BEFORE FINAL PERMANENT STRIPING IS PLACED.
7. DURING CONSTRUCTION, CONFLICTING PAVEMENT MARKINGS WILL NEED TO BE COVERED WITH BLACK REMOVABLE LANE TAPE OR WATER BLASTED AND THEN HAVE PAVEMENT MARKINGS INSTALLED FOR TEMPORARY CENTERLINE DURING CONSTRUCTION.

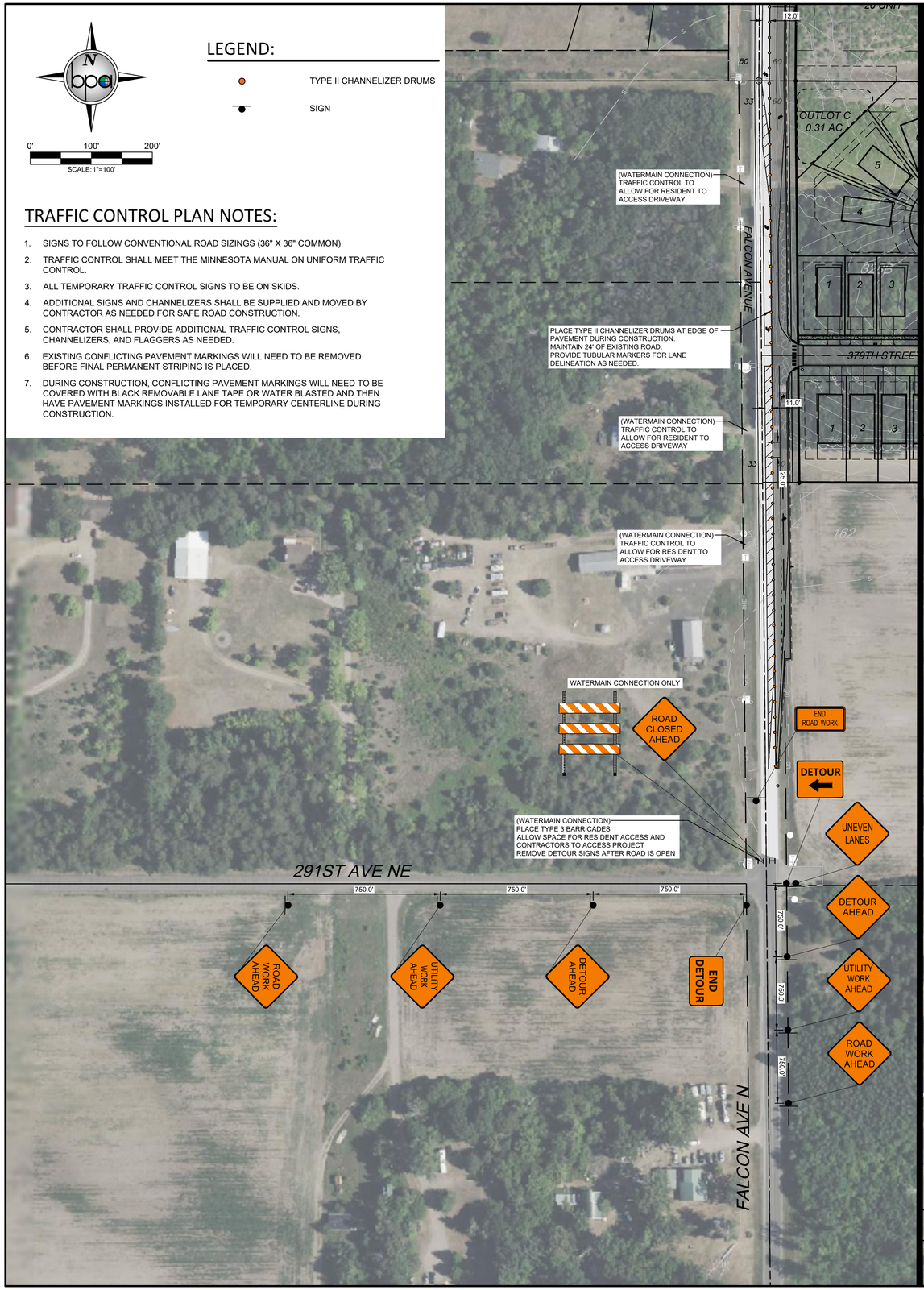

REV NO.	DATE	DESCRIPTION
1	04/01/2025	REVISION PER CITY REVIEW
2	04/24/2025	REVISION PER CITY REVIEW

DATE: 04/24/2025
DESIGN BY: MJM
DRAWN BY: MJM
CHECKED BY: CJD
DWG FILE: SITE BASE
FILE NO.: 22-0030.00

I hereby certify that this plan, specification, or report was prepared by me or under my direct supervision and that I am a duly Licensed Professional Engineer under the laws of the State of Minnesota.

NOT FOR CONSTRUCTION

Signed: Christopher J. Dahn
Date: Lic. No. 58628

BOGART, PEDERSON & ASSOCIATES, INC.
LAND SURVEYING
CIVIL ENGINEERING
ENVIRONMENTAL SERVICES
13076 FIRST STREET, BECKER, MN 55308-9322
TEL. 763-262-9322 FAX 763-262-9844

CEDAR RIDGE COMMUNITY LLC
CEDAR RIDGE COMMUNITY
City of North Branch, Chisago County, MN

TRAFFIC CONTROL PLAN (TURN LANE)

SHEET NO.
C7.2

4/24/2025 3:13 PM N:\Projects Current\22-0030.00 Belcher North Branch Plat\Civil\CAD Files\NB Traffic Control.dwg

REV NO.	DATE	DESCRIPTION
1	04/01/2025	REVISION PER CITY REVIEW
2	04/24/2025	REVISION PER CITY REVIEW

DATE: 04/24/2025
DESIGN BY: MJM
DRAWN BY: MJM
CHECKED BY: CJD
DWG FILE: SITE BASE
FILE NO.: 22-0030.00

I hereby certify that this plan, specification, or report was prepared by me or under my direct supervision and that I am a duly Licensed Professional Engineer under the laws of the State of Minnesota.

NOT FOR CONSTRUCTION

Signed: Christopher J. Dahn

Date: Lic. No. 58628

BOGART, PEDERSON & ASSOCIATES, INC.
LAND SURVEYING
CIVIL ENGINEERING
ENVIRONMENTAL SERVICES
13076 FIRST STREET, BECKER, MN 55308-9322
TEL: 763-262-9322 FAX: 763-262-3844

CEDAR RIDGE COMMUNITY LLC
CEDAR RIDGE COMMUNITY
City of North Branch, Chisago County, MN

TRAFFIC CONTROL PLAN (DETOUR)

SHEET NO.

C7.3

4/24/2025 3:13 PM N:\Projects Current\22-0030.00 Belcher North Branch Plat\Civil\CAD Files\NB Traffic Control.dwg

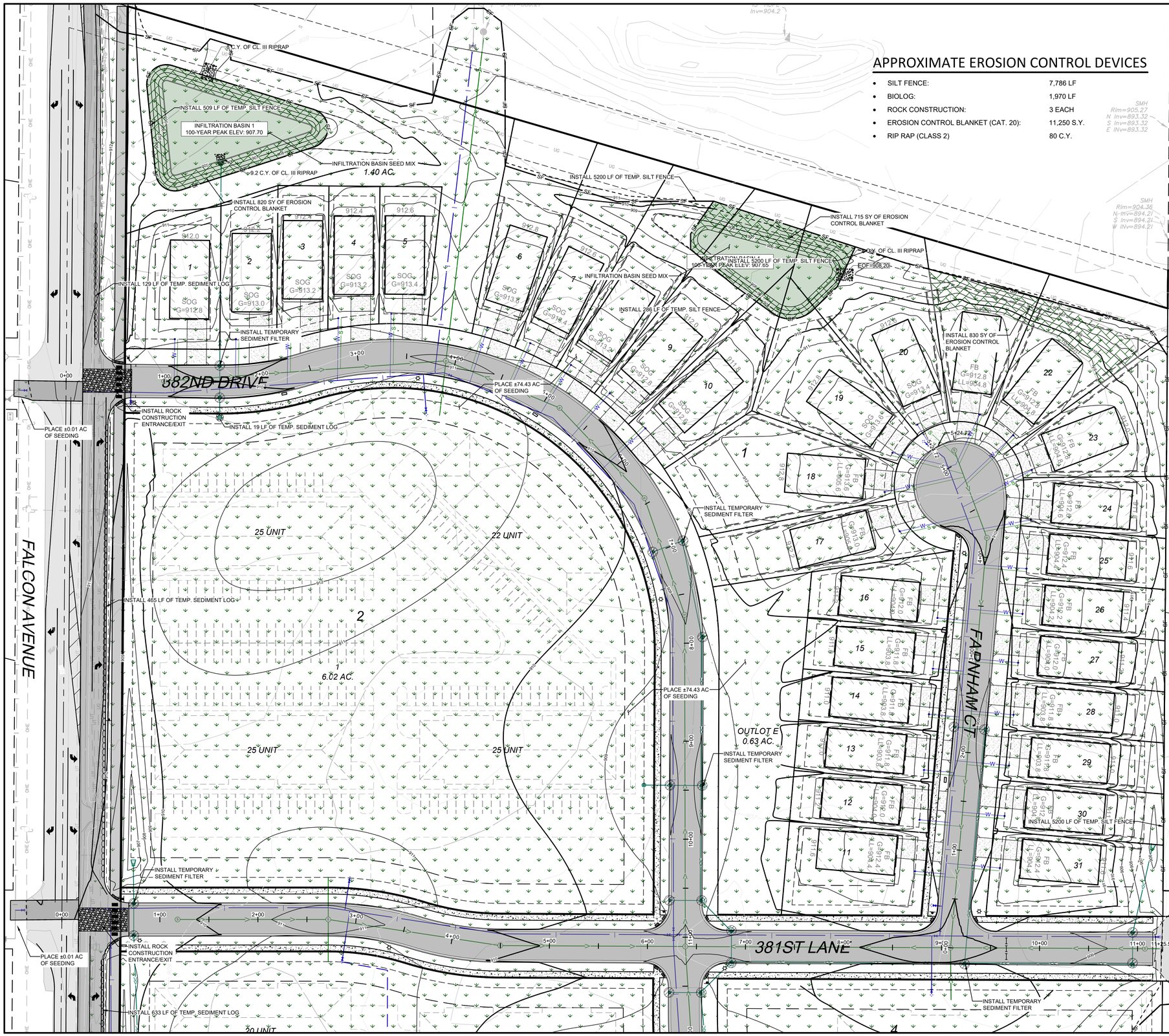

APPROXIMATE EROSION CONTROL DEVICES

SILT FENCE:	7,786 LF
BIOLOG:	1,970 LF
ROCK CONSTRUCTION:	3 EACH
EROSION CONTROL BLANKET (CAT. 20):	11,250 S.Y.
RIP RAP (CLASS 2)	80 C.Y.

LEGEND:

- TEMPORARY ROCK CONSTRUCTION ENTRANCE
- EROSION CONTROL BLANKET (CAT. 20)
- SF — GRADING LIMITS AND PROPOSED TEMPORARY SILT FENCE
- FIBER-LOG ROLLS
- PROPOSED RIP RAP
- 984 — PROPOSED CONTOUR
- E.O.F. — EMERGENCY OVERFLOW
- TEMPORARY SEDIMENT FILTER- HIGH FLOW

EROSION CONTROL NOTES:

1. CONTRACTOR SHALL CONFINE CONSTRUCTION OPERATIONS TO THE CONSTRUCTION/GRADING LIMITS SHOWN.
2. ALL WORK SHALL CONFORM TO THE MINNESOTA POLLUTION CONTROL AGENCY'S STORM WATER PERMIT REQUIREMENTS. CONTRACTOR SHALL OBTAIN ALL PERMITS AND COMPLY WITH ALL PERMIT REQUIREMENTS.
3. THE SITE SOIL EROSION AND SEDIMENT CONTROL FACILITIES SHALL BE INSTALLED PRIOR TO ANY DEMOLITION OR GRADING OPERATIONS AND MAINTAINED TO CONFORM WITH THE STANDARDS SPECIFIED BY THE PERMIT.
4. CONTRACTOR SHALL INSPECT TEMPORARY EROSION CONTROL MEASURES ON THE ENTIRE SITE AT LEAST EVERY 7 DAYS AND WITHIN 24 HOURS OF ANY MEASURABLE RAINSTORM. DAMAGED SILT FENCE OR OTHER EROSION CONTROL DEVICES OR PRACTICES SHALL BE REPAIRED IMMEDIATELY. INSPECTION AND MAINTENANCE OF DEVICES SHALL CONTINUE UNTIL THE SITE HAS UNDERGONE FINAL STABILIZATION AND A NOTICE OF TERMINATION IS SUBMITTED TO THE MPCA.
5. ALL GRADING OPERATIONS SHALL BE CONDUCTED IN A MANNER TO MINIMIZE THE POTENTIAL FOR SITE EROSION.
6. THE SITE SOIL EROSION AND SEDIMENT CONTROL FACILITIES SHALL BE INSTALLED AND MAINTAINED TO CONFORM WITH THE STANDARDS SPECIFIED BY THE CITY OF NORTH BRANCH AND THE MPCA.
7. EROSION CONTROL MEASURES SHALL BE INSTALLED PRIOR TO THE DISTURBANCE OF ANY AREAS AND MAINTAINED UNTIL ALL TRIBUTARY DISTURBED AREAS ARE RESTORED.
8. THE CONTRACTOR SHALL BE RESPONSIBLE FOR THE REMOVAL OF ALL EROSION CONTROL MEASURES, INCLUDING SILT FENCE AND BALES, UPON ESTABLISHMENT OF PERMANENT VEGETATION IN SAID AREAS.
9. ALL SOILS TRACKED ONTO PAVEMENT OR ANY OTHER OFF-SITE AREA SHALL BE REMOVED DAILY.
10. THE SITE SEDIMENT CONTROL FACILITIES FOR THE PROJECT MUST BE INSTALLED PRIOR TO ANY GRADING OPERATION.
11. ALL AREAS DISTURBED DURING CONSTRUCTION SHALL BE RESTORED AND VEGETATED AS SOON AS POSSIBLE. ANY FINISHED AREAS SHALL BE SEEDED AND MULCHED WITHIN 7 DAYS AFTER FINISHED GRADING IS COMPLETED IN ACCORDANCE TO MN/DOT 2575.
12. ALL DISTURBED AREAS SHALL BE REVEGETATED WITH MN/DOT SEED MIX, MULCHED, FERTILIZED & DISK ANCHORED, PER THE FOLLOWING SCHEDULE:

STANDARD SEED MIX 25-131:	220 LB/AC.
INFILTRATION BASIN SEED MIX 33-261:	35 LB/AC.
FERTILIZER 22-5-10:	350 LB/AC.
MULCH TYPE 3:	2 TONS/AC.

13. CONTRACTOR SHALL INSTALL TEMPORARY SEDIMENT BMP'S SHOWN AND NOT SHOWN ON PLANS DURING PHASING ON PROJECT TO COMPLY WITH MPCA, CITY INSPECTOR AND DEVELOPER REQUEST.

0' 50' 100'
SCALE: 1"=50'

REV NO.	DATE	DESCRIPTION
1	04/01/2025	REVISION PER CITY REVIEW
2	04/24/2025	REVISION PER CITY REVIEW

DATE: 04/24/2025
DESIGN BY: MJM
DRAWN BY: MJM
CHECKED BY: CJD
DWG FILE: EROSION
FILE NO.: 22-0030.00

I hereby certify that this plan, specification, or report was prepared by me or under my direct supervision and that I am a duly Licensed Professional Engineer under the laws of the State of Minnesota.

NOT FOR CONSTRUCTION

Signed: Christopher J. Dahn
Date: Lic. No. 58628

BOGART, PEDERSON & ASSOCIATES, INC.
LAND SURVEYING
CIVIL ENGINEERING
ENVIRONMENTAL SERVICES
13070 FIRST STREET, BECKER, MN 55308-9322
TEL: 763-206-3822 FAX: 763-262-5844

CEDAR RIDGE COMMUNITY LLC
CEDAR RIDGE COMMUNITY
City of North Branch, Chisago County, MN

NORTH EROSION CONTROL PLAN

SHEET NO.
C8.1

4/24/2025 3:13 PM N:\Projects Current\22-0030.02 Bellaire North Branch Plat\Civil\CAD Files\NB Erosion Control.dwg

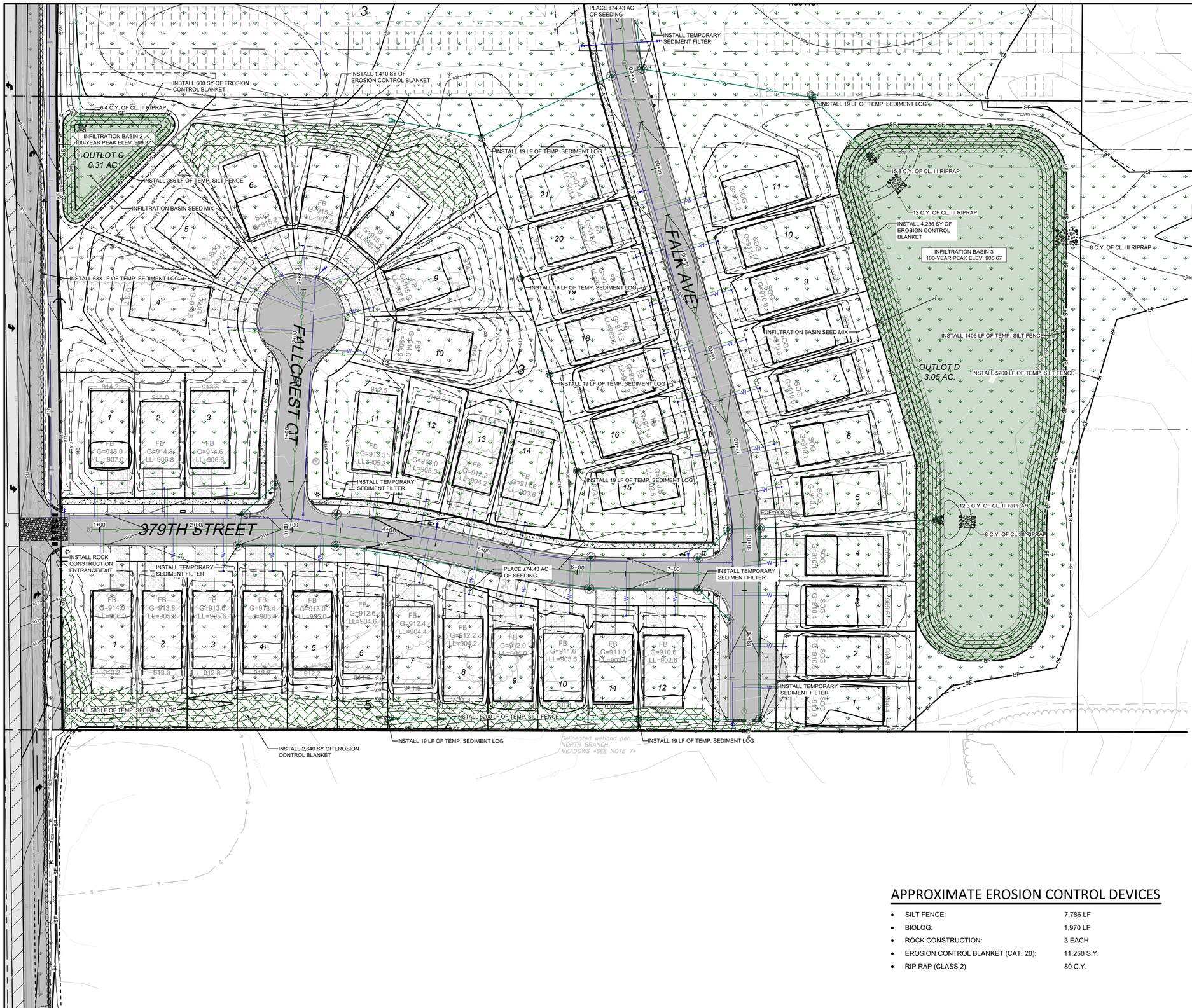

LEGEND:

- TEMPORARY ROCK CONSTRUCTION ENTRANCE
- EROSION CONTROL BLANKET (CAT. 20)
- SF — GRADING LIMITS AND PROPOSED TEMPORARY SILT FENCE
- FIBER-LOG ROLLS
- PROPOSED RIP RAP
- 984 — PROPOSED CONTOUR
- E.O.F. — EMERGENCY OVERFLOW
- TEMPORARY SEDIMENT FILTER- HIGH FLOW

EROSION CONTROL NOTES:

1. CONTRACTOR SHALL CONFINE CONSTRUCTION OPERATIONS TO THE CONSTRUCTION/GRADING LIMITS SHOWN.
2. ALL WORK SHALL CONFORM TO THE MINNESOTA POLLUTION CONTROL AGENCY'S STORM WATER PERMIT REQUIREMENTS. CONTRACTOR SHALL OBTAIN ALL PERMITS AND COMPLY WITH ALL PERMIT REQUIREMENTS.
3. THE SITE SOIL EROSION AND SEDIMENT CONTROL FACILITIES SHALL BE INSTALLED PRIOR TO ANY DEMOLITION OR GRADING OPERATIONS AND MAINTAINED TO CONFORM WITH THE STANDARDS SPECIFIED BY THE PERMIT.
4. CONTRACTOR SHALL INSPECT TEMPORARY EROSION CONTROL MEASURES ON THE ENTIRE SITE AT LEAST EVERY 7 DAYS AND WITHIN 24 HOURS OF ANY MEASURABLE RAINSTORM. DAMAGED SILT FENCE OR OTHER EROSION CONTROL DEVICES OR PRACTICES SHALL BE REPAIRED IMMEDIATELY. INSPECTION AND MAINTENANCE OF DEVICES SHALL CONTINUE UNTIL THE SITE HAS UNDERGONE FINAL STABILIZATION AND A NOTICE OF TERMINATION IS SUBMITTED TO THE MPCA.
5. ALL GRADING OPERATIONS SHALL BE CONDUCTED IN A MANNER TO MINIMIZE THE POTENTIAL FOR SITE EROSION.
6. THE SITE SOIL EROSION AND SEDIMENT CONTROL FACILITIES SHALL BE INSTALLED AND MAINTAINED TO CONFORM WITH THE STANDARDS SPECIFIED BY THE CITY OF NORTH BRANCH AND THE MPCA.
7. EROSION CONTROL MEASURES SHALL BE INSTALLED PRIOR TO THE DISTURBANCE OF ANY AREAS AND MAINTAINED UNTIL ALL TRIBUTARY DISTURBED AREAS ARE RESTORED.
8. THE CONTRACTOR SHALL BE RESPONSIBLE FOR THE REMOVAL OF ALL EROSION CONTROL MEASURES, INCLUDING SILT FENCE AND BALES, UPON ESTABLISHMENT OF PERMANENT VEGETATION IN SAID AREAS.
9. ALL SOILS TRACKED ONTO PAVEMENT OR ANY OTHER OFF-SITE AREA SHALL BE REMOVED DAILY.
10. THE SITE SEDIMENT CONTROL FACILITIES FOR THE PROJECT MUST BE INSTALLED PRIOR TO ANY GRADING OPERATION.
11. ALL AREAS DISTURBED DURING CONSTRUCTION SHALL BE RESTORED AND VEGETATED AS SOON AS POSSIBLE. ANY FINISHED AREAS SHALL BE SEEDED AND MULCHED WITHIN 7 DAYS AFTER FINISHED GRADING IS COMPLETED IN ACCORDANCE TO MN/DOT 2575.
12. ALL DISTURBED AREAS SHALL BE REVEGETATED WITH MN/DOT SEED MIX, MULCHED, FERTILIZED & DISK ANCHORED, PER THE FOLLOWING SCHEDULE:

STANDARD SEED MIX 25-131:	220 LB/AC.
INFILTRATION BASIN SEED MIX 33-261:	35 LB/AC.
FERTILIZER 22-5-10:	350 LB/AC.
MULCH TYPE 3:	2 TONS/AC.

13. CONTRACTOR SHALL INSTALL TEMPORARY SEDIMENT BMP'S SHOWN AND NOT SHOWN ON PLANS DURING PHASING ON PROJECT TO COMPLY WITH MPCA, CITY INSPECTOR AND DEVELOPER REQUEST.

APPROXIMATE EROSION CONTROL DEVICES

SILT FENCE:	7,786 LF
BIOLOG:	1,970 LF
ROCK CONSTRUCTION:	3 EACH
EROSION CONTROL BLANKET (CAT. 20):	11,250 S.Y.
RIP RAP (CLASS 2)	80 C.Y.

REV NO.	DATE	DESCRIPTION
1	04/01/2025	REVISION PER CITY REVIEW
2	04/24/2025	REVISION PER CITY REVIEW

DATE: 04/24/2025
DESIGN BY: MJM
DRAWN BY: MJM
CHECKED BY: CJD
DWG FILE: EROSION
FILE NO.: 22-0030.00

I hereby certify that this plan, specification, or report was prepared by me or under my direct supervision and that I am a duly Licensed Professional Engineer under the laws of the State of Minnesota.

NOT FOR CONSTRUCTION

Signed: Christopher J. Dahn
Date: Lic. No. 58628

BOGART, PEDERSON & ASSOCIATES, INC.
LAND SURVEYING
CIVIL ENGINEERING
ENVIRONMENTAL SERVICES
13076 FIRST STREET, BECKER, MN 55308-9322
TEL: 763-262-9822 FAX: 763-262-9844

CEDAR RIDGE COMMUNITY LLC
CEDAR RIDGE COMMUNITY
City of North Branch, Chisago County, MN

SOUTH EROSION CONTROL PLAN

SHEET NO.
C8.2

STORM WATER POLLUTION PREVENTION PLAN NARRATIVE:

GENERAL INFORMATION

THIS STORMWATER POLLUTION PREVENTION PLAN IS PREPARED IN ACCORDANCE TO THE NATIONAL POLLUTANT DISCHARGE ELIMINATION SYSTEM PERMIT NO. MN R1000001 FOR STORMWATER DISCHARGES ASSOCIATED WITH CONSTRUCTION ACTIVITY.
PROJECT NAME: CEDAR RIDGE COMMUNITY
LOCATION: FALCON AVE N, NORTH BRANCH MN. 55056
CHISAGO COUNTY
LAT/LONG: 45.501044, -93.000047

DESCRIPTION OF CONSTRUCTION ACTIVITY:

DEVELOPMENT CONSISTS OF PAVING, GRADING, UTILITY INSTALLATION, AND TURF ESTABLISHMENT.

PROJECT CONTACTS

CEDAR RIDGE COMMUNITY LLC AND THE CONTRACTOR ARE RESPONSIBLE FOR IMPLEMENTATION OF THE SWPPP AND THE INSTALLATION, INSPECTION, AND MAINTENANCE OF THE EROSION PREVENTION AND SEDIMENT CONTROL BMP'S BEFORE AND DURING CONSTRUCTION.

SWPPP PREPARATION:
SWPPP PREPARER: MICHAEL MORDAL-HUEBSCH
-BOGART, PEDERSON & ASSOCIATES
TRAINING: ENGINEER AND SWPPP DESIGNER (EXP 2023)
ADDRESS: 13076 FIRST STREET
BECKER, MN 53308-9322
TELEPHONE: 763-262-8822
EMAIL; CDAHN@BOGART-PEDERSON,COM
OWNER:
OWNER CONTACT: JASON BETZLER
ADDRESS: 12222 313TH AVE, PRINCETON, MN 55371
TELEPHONE: (763)-360-1453
EMAIL; MILLELACSWALLEYE@LIVE.COM

CONTRACTOR (TO BE FILLED OUT BY THE CONTRACTOR):
BUSINESS NAME _____
OWNER NAME _____
MAILING ADDRESS _____
CITY _____
TELEPHONE _____
EMAIL _____
CONTACT NAME _____
MAILING ADDRESS _____
CITY _____
TELEPHONE _____
EMAIL _____

ESTIMATED DATES OF CONSTRUCTION:

START DATE ___/___/___ (TO BE FILLED IN BY CONTRACTOR)
COMPLETION DATE ___/___/___ (TO BE FILLED IN BY CONTRACTOR)

PERMANENT STORMWATER DESIGN CALCULATIONS:

SEE THE STORM WATER MANAGEMENT REPORT FOR MORE INFORMATION. CONTACT BOGART, PEDERSON & ASSOCIATES FOR REPORT. PROPOSED FLOW RATE IS LIMITED THROUGH DIRECTING STORM WATER TO FOUR INFILTRATION BASINS.
SOIL GROUP: A

DESCRIPTION OF EROSION CONTROL ACTIVITY:

EROSION CONTROL CONSISTS OF SILT FENCE PERIMETER CONTROL, TURF ESTABLISHMENT THROUGH SEEDING AND EROSION CONTROL BLANKET, AND ROCK CONSTRUCTION ENTRANCE PLACEMENT.

CUMULATIVE IMPERVIOUS SURFACES:

AREA OF DISTURBANCE:	42.6	ACRES
PRE-CONSTRUCTION IMPERVIOUS AREA:	1.49	ACRES
POST CONSTRUCTION IMPERVIOUS AREA:	14.32	ACRES
NEW IMPERVIOUS AREA:	12.83	ACRES

RECEIVING WATERS:

STORM WATER FROM THIS SITE WILL BE DISCHARGED TO THE FOUR INFILTRATION BASINS ON SITE.

PLANS AND SPECIFICATIONS

THE PLAN SHEETS OF THIS PLAN SET INDICATE THE FOLLOWING ITEMS:
- THE PROJECT LOCATION AND CONSTRUCTION LIMITS.
- LOCATIONS OF IMPERVIOUS SURFACES.
- LOCATIONS OF AREAS NOT TO BE DISTURBED (E.G., BUFFER ZONES, WETLANDS, ETC.).
- STEEP SLOPE LOCATIONS.
- LOCATIONS OF ALL TEMPORARY AND PERMANENT EROSION AND SEDIMENT CONTROL BMP'S TO BE INSTALLED ON THE PROJECT.
- THE DETAIL SHEETS INDICATE EROSION AND SEDIMENT CONTROL BMPS TO BE INSTALLED ON THE PROJECT.
- IF DEWATERING IS REQUIRED FOR THIS PROJECT, THE PUMP DISCHARGE SHALL BE TREATED PRIOR TO BEING DISCHARGED OFF-SITE OR INTO A SURFACE WATER. THE DISCHARGE SHALL BE VISUALLY CHECKED TO ENSURE THAT IT IS VISIBLY CLEAN WATER.

TEMPORARY SEDIMENT CONTROL PRACTICES

DOWN GRADIENT SILT FENCE AND SEDIMENT LOG INSTALLATIONS ARE TO BE INPLACE PRIOR TO THE COMMENCEMENT OF ANY EARTHWORK OPERATIONS.

TOPSOIL IS TO BE WINDROWED ALONG THE CONSTRUCTION LIMITS AND PLACED AS SLOPE DRESSING IMMEDIATELY FOLLOWING COMPLETION OF THE GRADING OPERATIONS, AS THE GRADING OPERATIONS PROCEED.

TOPSOIL PLACEMENT ALONG THE EMBANKMENT SLOPES THOUGH THE WETLANDS AREA IS TO BE SPREAD BY A LOW IMPACT CRAWLER TRACTOR OPERATING UP AND DOWN THE SLOPES SO AS TO PROVIDE TRACK PRINTS PARALLEL WITH THE CONTOURS.

INSTALLATION OF MN/DOT CATEGORY 3 EROSION CONTROL BLANKET ALONG THE EMBANKMENT SLOPES ADJACENT THE WETLANDS AREA.

ALL TEMPORARY SOILS STOCKPILES WILL REQUIRE AN EFFECTIVE MEANS OF SEDIMENT CONTROL SUCH AS AN EROSION CONTROL BLANKET COVERING OR SILT FENCE INSTALLATION ALONG THE TOE OF SLOPE.

ALL COMPLETED SWALES SLOPES AND BOTTOMS NOT DRAINING TOWARDS WETLAND AREAS ARE TO BE STABILIZED WITHIN 7 DAYS.

TEMPORARY STABILIZATION WILL BE REQUIRED IN AREAS WHERE GRADING OPERATIONS ARE SUSPENDED OR CEASED FOR A PERIOD OF 7 DAYS OR GREATER.

A ROCK CONSTRUCTION ENTRANCE FOR SEDIMENT CONTROL IS TO BE PROVIDED AT THE PROJECT ENTRANCE ON FALCON AVE N.

STREET SWEEPING OF THE PAVED SURFACES WILL BE REQUIRED AS DIRECTED BY THE ENGINEER.

TIMING OF EROSION CONTROL:

SILT FENCE AND SEDIMENT LOGS WILL BE INSTALLED PRIOR TO CONSTRUCTION.

RIPRAP AND FILTER BLANKET WILL BE PLACED AT THE OUTLETS WITHIN 24 HOURS OF THE OUTLET PLACEMENT.

THE CONTRACTOR MUST STABILIZE ALL EXPOSED SOIL AREAS IMMEDIATELY FOLLOWING CONSTRUCTION WHEREVER CONSTRUCTION WILL NOT OCCUR FOR A PERIOD GREATER THAN OR EQUAL TO 7 DAYS.

STABILIZATION WORK MUST BE COMPLETE WITHIN 7 CALENDAR DAYS AFTER THE CONSTRUCTION WORK IN THAT AREA HAS TEMPORARILY OR PERMANENTLY CEASED.

AREAS THAT ARE WITHIN 200 FT OF A PUBLIC WATER MUST BE STABILIZED WITHIN 24 HOURS OF COMPLETING CONSTRUCTION DURING PERIODS OF "WORK IN WATER RESTRICTIONS" FOR TIME PERIODS DECLARED BY THE DNR.

THE CONTRACTOR IS RESPONSIBLE TO MAINTAIN THE DISTURBED AREA UNTIL VEGETATION IN ESTABLISHED.

ONCE VEGETATION IS ESTABLISHED AND CONSTRUCTION IS COMPLETE, THE SILT FENCE AND ANY OTHER TEMPORARY EROSION CONTROL THAT IS NOT BIODEGRADABLE SHALL BE REMOVED.

STREET SWEEPING TO BE PROVIDED AS DIRECTED BY THE ENGINEER OR OWNER. THE CITY REQUIRES STREET SWEEPING TO OCCUR WITHIN 8 HOURS OF NOTICE FROM THE CITY.

APPLYING MULCH, HYDROMULCH, TACKIFIER, POLYACRYLAMIDE OR SIMILAR EROSION PREVENTION PRACTICES IS NOT ACCEPTABLE STABILIZATION IN ANY PART OF A TEMPORARY OR PERMANENT DRAINAGE DITCH OR SWALE. BLANKETS OR OTHER APPROVED, BY THE ENGINEER, METHOD SHALL BE USED.

INSPECTION AND MAINTENANCE ACTIVITIES

THE CONTRACTOR SHALL BE RESPONSIBLE FOR COORDINATING AND SCHEDULING THE WORK OF ALL OPERATIONS, INCLUDING SUBCONTRACTORS AND UTILITY COMPANIES, SUCH THAT EROSION AND SEDIMENT CONTROL MEASURES ARE FULLY EXECUTED FOR EACH OPERATION AND IN A TIMELY MANNER OVER THE DURATION OF THE PROJECT. OPERATORS HAVE DAILY ACCESS TO THE PROJECT SITE. THE CONTRACTOR SHALL BE FULLY RESPONSIBLE FOR THE SWPPP IMPLEMENTATION UNTIL THE ENTIRE SITE HAS UNDERGONE FINAL STABILIZATION AND N.O.T HAS BEEN SUBMITTED TO THE MPCA.

THE CONTRACTOR IS TO PROVIDE A TRAINED INDIVIDUAL RESPONSIBLE FOR THE IMPLEMENTATION, INSPECTION AND MAINTENANCE OF THE EROSION AND SEDIMENT CONTROL BMPS ON THE PROJECT. THAT INDIVIDUAL IS TO BE IDENTIFIED AT THE PRE-CONSTRUCTION CONFERENCE AND LISTED IN THE MINUTES THEREOF.

THE APPOINTED INDIVIDUAL IS TO PERFORM A ROUTINE INSPECTION OF THE ENTIRE SITE AT LEAST ONCE EVERY SEVEN DAYS DURING CONSTRUCTION OPERATIONS AND WITHIN 24 HOURS AFTER A RAINFALL EVENT GREATER THAN 0.5 INCHES IN 24 HOURS.

A INSPECTION FORM WILL BE PROVIDED BY THE CONTRACTOR. ANY DEFICIENCIES IN THE EROSION AND SEDIMENT CONTROL BMPS ARE TO BE NOTED ON THE INSPECTION FORM AND CORRECTED BY THE END OF THE NEXT BUSINESS DAY.

PERIMETER CONTROL DEVICES ARE TO BE REPAIRED OR REPLACED WHEN THEY ARE NO LONGER EFFECTIVE OR WHEN THE SEDIMENT REACHES ONE-HALF THE HEIGHT OF THE DEVICE.

TRAINING DOCUMENTATION:
SWPPP IMPLEMENTATION, REVISING, AMENDING, AND INSPECTING (TO BE FILLED IN BY THE CONTRACTOR)
NAME OF INDIVIDUAL
OVERSEEING & INSPECTING _____
DATE OF TRAINING _____
NAME OF INSTRUCTOR _____
ENTITY PROVIDING TRAINING _____
CONTENT OF TRAINING _____
TOTAL HOURS OF TRAINING _____

BMP INSTALLATION, MAINTENANCE, AND REPAIR (TO BE FILLED IN BY THE CONTRACTOR)
NAME OF INDIVIDUAL
OVERSEEING & INSPECTING _____
DATE OF TRAINING _____
NAME OF INSTRUCTOR _____
ENTITY PROVIDING TRAINING _____
CONTENT OF TRAINING _____
TOTAL HOURS OF TRAINING _____

POLLUTION PREVENTION

FERTILIZERS ARE TO BE APPLIED ONLY IN THE AMOUNTS AS SPECIFIED AND WORKED INTO THE SOIL TO MINIMIZE EXPOSURE TO STORMWATER RUNOFF.

ONSITE REFUELING OPERATIONS ARE TO BE CONDUCTED WITH CARE. ANY INADVERTENT SPILLAGE OF FUEL OR CHEMICALS IS TO BE IMMEDIATELY CLEANED UP, REMOVED FROM THE SITE AND DISPOSED OF IN ACCORDANCE TO STATE AND LOCAL REGULATIONS. MAJOR SPILLS ARE TO BE REPORTED TO THE MPCA 24 HOUR NOTIFICATION NETWORK AT 800 422 0798. ALL VEHICLES ON-SITE ARE TO BE MONITORED FOR LEAKS AND SUBJECT TO ROUTINE PREVENTIVE MAINTENANCE EFFORTS TO REDUCE THE LIKELIHOOD OF LEAKAGE AND OR SPILLS.

PORTABLE SANITARY WASTE FACILITIES ARE TO BE PROVIDED ONSITE AND EMPTIED ON A BI-WEEKLY BASIS.

CONCRETE BATCH TRUCKS WILL NOT BE ALLOWED TO DISCHARGE DRUM AND CHUTE WASHOUT DIRECTLY ON THE GROUND. A PORTABLE WASHOUT RECEPTACLE IS TO BE PROVIDED BY THE CONTRACTOR AT THE LOCATION AS PROVIDED BY THE OWNER.

FINAL STABILIZATION

FINAL STABILIZATION OCCURS WHEN 70 PERCENT OF THE PERVIOUS AREA IS COVERED WITH UNIFORM, PERMANENT VEGETATION.

ALL TEMPORARY EROSION AND SEDIMENT CONTROL FEATURES ARE TO BE REMOVED AND THE NPDES NOTICE OF TERMINATION IS TO BE PREPARED AND SUBMITTED TO THE MPCA.

LOCATION OF SWPPP REQUIREMENTS IN PROJECT PLAN

DESCRIPTION	TITLE	LOCATION
EROSION CONTROL DETAILS	CONSTRUCTION DETAILS	C9.1-C9.4
EROSION CONTROL LOCATIONS	EROSION CONTROL LOCATIONS	C8.1-C8.2

24 HOUR MPCA EMERGENCY NOTIFICATION:
TELEPHONE NUMBERS: 651-649-5451
800-422-0798

ESTIMATED QUANTITIES:

THE FOLLOWING QUANITITES IS AN ESTIMATED PRELIMINARY AMOUNT REQUIRED FOR SEDIMENT CONTROL BMP'S AT THE START OF THE PROJECT. THIS ESTIMATE IS PROVIDED AS REQUIRED BY THE MINNESOTA POLLUTION CONTROL AGENCY GENERAL STORMWATER PERMIT FOR CONSTRUCTION ACTIVITY. ANY ADDITIONAL AND/OR REPLACEMENT BMP'S QUANTITIES WILL BE FURNISHED AND INSTALLED BY THE CONTRACTOR AT NO ADDITIONAL COST TO THE OWNER.

ESTIMATED PRELIMINARY QUANTITIES AT START OF PROJECT:

ITEM	UNIT	ESTIMATED INITIAL QUANTITY
TEMPORARY CONSTRUCTION ENTRANCE	EA	3
TEMPORARY SEDIMENT FILTER	EA	35
TEMPORARY CONCRETE WASHOUT	EA	1
TEMPORARY PUMP SEDIMENT CONTROL DEVICE	EA	1
TEMPORARY SEDIMENT LOGS	LF	1,970
TEMPORARY SILT FENCE	LF	7,786
EROSION CONTROL BLANKET (CAT. 20)	SY	11,250

TEMPORARY EROSION AND SEDIMENT CONTROL SPECIFICATIONS

PART 1 GENERAL

1.01 SECTION INCLUDES

A. PREVENTION OF SEDIMENTATION OF WATERWAYS, OPEN DRAINAGE WAYS, AND STORM AND SANITARY SEWERS DUE TO CONSTRUCTION ACTIVITIES.

1.02 REFERENCE STANDARDS

A. GENERAL PERMIT AUTHORIZATION TO DISCHARGE STORM WATER ASSOCIATED WITH CONSTRUCTION ACTIVITY UNDER THE NATIONAL POLLUTANT DISCHARGE ELIMINATION SYSTEM. MINNESOTA PERMIT NO: MN R100001.

1.03 PERFORMANCE REQUIREMENTS

A. COMPLY WITH ALL REQUIREMENTS OF THE MINNESOTA POLLUTION CONTROL AGENCY FOR EROSION AND SEDIMENT CONTROL.

B. DO NOT BEGIN CLEARING, GRADING, OR OTHER WORK INVOLVING DISTURBANCE OF GROUND SURFACE COVER UNTIL APPLICABLE PERMITS HAVE BEEN OBTAINED; FURNISH ALL DOCUMENTATION REQUIRED TO OBTAIN APPLICABLE PERMITS.
1. OBTAIN AND PAY FOR PERMITS REQUIRED BY AUTHORITY HAVING JURISDICTION.

C. TIMING: PUT PREVENTIVE MEASURES IN PLACE PRIOR TO DISTURBANCE OF SURFACE COVER AND BEFORE PRECIPITATION OCCURS.

D. EROSION OFF SITE: PREVENT EROSION OF SOIL AND DEPOSITION OF SEDIMENT ON OTHER PROPERTIES CAUSED BY WATER LEAVING THE PROJECT SITE DUE TO CONSTRUCTION ACTIVITIES FOR THIS PROJECT.
1. PREVENT TRACKING OF MUD ONTO PUBLIC ROADS OUTSIDE SITE.
2. PREVENT MUD AND SEDIMENT FROM FLOWING ONTO PAVEMENTS.

E. SEDIMENTATION OF WATERWAYS OFF SITE: PREVENT SEDIMENTATION OF WATERWAYS OFF THE PROJECT SITE, INCLUDING RIVERS, STREAMS, LAKES, PONDS, OPEN DRAINAGE WAYS, STORM SEWERS, AND SANITARY SEWERS.
1. IF SEDIMENTATION OCCURS, INSTALL OR CORRECT PREVENTIVE MEASURES IMMEDIATELY AT NO COST TO OWNER; REMOVE DEPOSITED SEDIMENTS; COMPLY WITH REQUIREMENTS OF AUTHORITIES HAVING JURISDICTION.

F. MAINTENANCE: MAINTAIN TEMPORARY PREVENTIVE MEASURES UNTIL PERMANENT MEASURES HAVE BEEN ESTABLISHED.

PART 2 PRODUCTS

2.01 MATERIALS

A. TEMPORARY SILT FENCE: WOVEN POLYPROPYLENE GEOTEXTILE RESISTANT TO COMMON SOIL CHEMICALS, MILDEW, AND INSECTS; NON-BIODEGRADABLE; IN LONGEST LENGTHS POSSIBLE; FABRIC INCLUDING SEAMS WITH THE FOLLOWING MINIMUM AVERAGE ROLL LENGTHS:
1. AVERAGE OPENING SIZE: 20 U.S. STD. SIEVE, MAXIMUM, WHEN TESTED IN ACCORDANCE WITH ASTM D4751.
2. PERMITTIVITY: 0.05 SEC^-1, MINIMUM, WHEN TESTED IN ACCORDANCE WITH ASTM D4491.
3. ULTRAVIOLET RESISTANCE: RETAINING AT LEAST 70 PERCENT OF TENSILE STRENGTH, WHEN TESTED IN ACCORDANCE WITH ASTM D4355/D4355M AFTER 500 HOURS EXPOSURE.
4. TENSILE STRENGTH: 100 LB-F, MINIMUM, IN CROSS-MACHINE DIRECTION; 124 LB-F, MINIMUM, IN MACHINE DIRECTION; WHEN TESTED IN ACCORDANCE WITH ASTM D4632.
5. ELONGATION: 15 TO 30 PERCENT, WHEN TESTED IN ACCORDANCE WITH ASTM D4632.
6. TEAR STRENGTH: 55 LB-F, MINIMUM, WHEN TESTED IN ACCORDANCE WITH ASTM D4533.
7. COLOR: MANUFACTURER'S STANDARD, WITH EMBEDMENT AND FASTENER LINES PREPRINTED.
8. SILT FENCE POSTS: ONE OF THE FOLLOWING, MINIMUM 5 FEET LONG:
a. STEEL U- OR T-SECTION, WITH MINIMUM MASS OF 1.33 LB PER LINEAR FOOT.
b. SOFTWOOD, 4 BY 4 INCHES IN CROSS SECTION.
c. HARDWOOD, 2 BY 2 INCHES IN CROSS SECTION.

B. TEMPORARY SEDIMENT LOGS: FILTER LOGS SHALL CONSIST OF TYPE WOOD FIBER BIOROLLS AND THE REQUIREMENTS OF MNDOT SPEC. 3897.
1. SHALL BE ONE OF THE FOLLOWING.
a. SHALL BE SILTSOXX PERIMETER CONTROL BY FILTREXX, INC., OR EQUAL.

C. TEMPORARY SEDIMENT FILTER.
1. SHALL BE ONE OF THE FOLLOWING.
a. DROP-IN SEDIMENT FILTER UNIT THAT INSERTS INTO THE INLET.
1) SHALL BE FLEXSTORM PURE: PERMANENT INLET FILTER BY ADS, INC., OR EQUAL.
(a)PROVIDE CURB OPENING PROTECTION FOR EXISTING INLETS WITH CURB OPENINGS.

D. TEMPORARY ROCK CONSTRUCTION ENTRANCE.
1. ROCK SHALL BE CLEAN 1 TO 2 INCH WASHED ROCK.

E. TEMPORARY SLOPE EROSION PROTECTION.
1. SHALL BE ONE OF THE FOLLOWING.
a. EROSION CONTROL BLANKET.
1) SHALL CONSIST OF A UNIFORM WEB OF INTERLOCKING STRAW OR WOOD FIBERS SANDWICHED BETWEEN AN ATTACHED TOP AND BOTTOM LAYER OF NET BACKING.
2) THE NETTING SHALL BE BIODEGRADABLE CONTAINING SUFFICIENT UV STABILIZATION FOR BREAKDOWN TO OCCUR WITHIN A NORMAL GROWING SEASON.
3) STAPLES USED TO ANCHOR THE BLANKETS SHALL BE U-SHAPED, 11 GAUGE OR HEAVIER STEEL WIRE HAVING A SPAN WIDTH OF 1 INCH AND A LENGTH OF 8 INCHES OR MORE FROM TOP TO BOTTOM AFTER BENDING.
4) THE EROSION CONTROL BLANKETS ACCEPTABLE FOR USE ON THIS PROJECT INCLUDE:
(a)GEO-SYNTHETICS, INC., - LANDLOK 52.
(b)NORTH AMERICAN GREEN - S150.
(c)OR EQUAL.
b. BONDED FIBER MATRIX.
1) THE FIBERS SHALL BE COMPOSED OF 100% WOOD OR WOOD BY-PRODUCTS. A MINIMUM OF 25% OF THE FIBERS SHALL AVERAGE 10.16 MM (0.4 INCHES) IN LENGTH AND 50% OR MORE SHALL BE RETAINED ON A CLARK FIBER CLASSIFIER 24 MESH SCREEN. FIBERS SHALL BE COLORED WITH A WATER SOLUBLE, NON-TOXIC DYE, TO AID IN UNIFORM APPLICATION OVER THE SITE.
2) THE BINDER SHALL BE A HYDRO COLLOID BASED (GUAR GUM) WITH ADDED SLOW-RELEASE AND AGRICULTURAL BASED FERTILIZERS. THE BINDER SHALL NOT DISSOLVE OR DISPERSE UPON REWETTING.
3) THE BFM SLURRY SHALL DRY TO FORM A CRUST APPROXIMATELY 3-6 MM (1/8 TO 1/4 INCHES) THICK ADHERING TO THE SOIL SURFACE.
4) THE MOISTURE CONTENT OF THE MATRIX SHALL BE 12% +/- 3% BY WEIGHT.
5) THE MATRIX SHALL CONSIST OF MATERIALS THAT ARE 100% BIODEGRADABLE AND 100% BENEFICIAL TO PLANT LIFE.
6) THE MATRIX SHALL PROVIDE 100% CONTINUOUS COVERAGE AND SHALL HAVE NO HOLES GREATER THAN 1MM IN SIZE.
7) THE HYDRATED MIXTURE DENSITY SHALL BE APPROXIMATED BY A SLUMP TEST PRIOR TO APPLICATION.
8) THE BFM MULCH: WATER RATIO SHALL BE AS MANUFACTURER RECOMMENDATIONS. THE MINIMUM BFM MULCH TO WATER RATIO IS 50LBS BFM MULCH AND 100 GALLONS WATER. THE WATER RATE WILL VARY BETWEEN 100 GALLONS AND 125 GALLONS PER 50LBS, DEPENDING ON WHICH OF THE PRODUCTS IS USED.
9) THE BONDED FIBER MATRIX MULCH PRODUCTS ACCEPTABLE FOR USE ON THIS PROJECT INCLUDE.
(a)ECOAEGIS - MANUFACTURED BY CANFOR.
(b)SOIL GUARD - MANUFACTURED BY MAT, INC.
(c)CONWED 3000 - MANUFACTURED BY CONWED FIBERS, INC.

F. TEMPORARY PUMPED SEDIMENT CONTROL DEVICE.
1. NON-WOVEN GEOTEXTILE FABRIC SEWN INTO A BAG USING A DOUBLE NEEDLE MACHINE AND HIGH STRENGTH THREAD.
a. SEAMS SHALL HAVE AN AVERAGE WIDTH STRENGTH OF 60LB/INCH AS PER ASTM D4883 AND MEET OR EXCEED THE FOLLOWING.
1) GRAB TENSILE OF 205 LBS AS PER ASTM D 4632.
2) PUNCTURE OF 110 LBS AS PER ASTM D 4833.
3) FLOW RATE OF 95 GAL/MIN/SF AS PER ASTM D 4491.
4) PERMITTIVITY OF 1.5 SEC-1 AS PER ASTM D 4491.
5) MULLEN BURST STRENGTH OF 350 PSI AS PER ASTM D 3786.
6) AOS% OF 80% US SIEVE AS PER ASTM D 4751.
2. SPOUT LARGE ENOUGH TO ACCOMMODATE A 4 INCH DISCHARGE HOSE WITH STRAP TO TIE UNIT CLOSED.
3. SHALL BE ONE OF THE FOLLOWING.
a. DIRTBAG.
1) ACF ENVIRONMENTAL, INC., 2831 CARDWELL ROAD, RICHMOND, VIRGINIA 23234, 800-448-3636.
b. DANDY DEWATERING BAG.
1) DANDY PRODUCTS, INC., P.O. BOX 1980, WESTERVILLE, OHIO 43086, 800-591-2284.
c. OR EQUAL.

PART 3 EXECUTION

3.01 PREPARATION

A. SCHEDULE WORK SO THAT SOIL SURFACES ARE LEFT EXPOSED FOR THE MINIMUM AMOUNT OF TIME.

B. THE CONSTRUCTION SITE OPERATOR SHALL FOLLOW ALL REQUIREMENTS OF THE MINNESOTA STORMWATER PERMIT NO. MN R100001.

C. THE CONTRACTOR SHALL COMPLETE AND SIGN THE NOTICE OF INTENT, OBTAIN THE OWNER'S SIGNATURE, AND SUBMIT TO THE MPCA.
1. PROVIDE A SIGNED COPY TO THE OWNER.

3.03 INSTALLATION

A. TEMPORARY ROCK CONSTRUCTION ENTRANCE.
1. THE ROCK AREA SHALL BE A MINIMUM OF 6 INCHES DEEP, EXTEND THE FULL WIDTH OF THE EGRESS AREA AND SHALL BE AT LEAST 50FT LONG, HOWEVER, LONGER ENTRANCES MAY BE REQUIRED TO ADEQUATELY CLEAN THE TIRES.
2. GEOTEXTILE FABRIC MAY BE USED TO PREVENT MIGRATION OF MUD FROM THE UNDERLYING SOIL INTO THE ROCK.

B. TEMPORARY SILT FENCES:
1. STORE AND HANDLE FABRIC IN ACCORDANCE WITH ASTM D4873.
2. USE NOMINAL 30 INCH HIGH BARRIERS, MINIMUM 60 INCH LONG POSTS SPACED AT 6 FEET MAXIMUM SPACING.
3. EMBED BOTTOM OF FABRIC IN A TRENCH ON THE UPSLOPE SIDE OF FENCE, WITH 6 INCHES OF FABRIC LAID FLAT ON BOTTOM OF TRENCH FACING UPSLOPE; BACKFILL TRENCH AND COMPACT.
4. MINIMUM POST EMBEDMENT.
a. STEEL POST = 24 INCHES, MINIMUM.
b. WOOD POST = 18 INCHES, MINIMUM.
5. DO NOT SPLICE FABRIC WIDTH; MINIMIZE SPLICES IN FABRIC LENGTH; SPLICE AT POST ONLY, OVERLAPPING AT LEAST 18 INCHES, WITH EXTRA POST.
6. FASTEN FABRIC TO WOOD POSTS USING ONE OF THE FOLLOWING:
a. FOUR NAILS PER POST WITH 3/4 INCH DIAMETER FLAT OR BUTTON HEAD, 1 INCH LONG, AND 14 GAGE, 0.083 INCH SHANK DIAMETER.
b. FIVE STAPLES PER POST WITH AT LEAST 17 GAGE, 0.0453 INCH WIRE, 3/4 INCH CROWN WIDTH AND 1/2 INCH LONG LEGS.
7. FASTEN FABRIC TO STEEL POSTS USING WIRE, NYLON CORD, OR INTEGRAL POCKETS.

C. TEMPORARY SEDIMENT LOGS:
1. PERIMETER CONTROL SHOULD BE INSTALLED PARALLEL TO THE BASE OF THE SLOPE OR OTHER DISTURBED AREA.
2. STAKES SHOULD BE INSTALLED THROUGH THE MIDDLE OF THE PERIMETER CONTROL ON 10 FT CENTERS, USING 2 IN BY 2 IN BY
3 FT WOODEN STAKES. IN THE EVENT STAKING IS NOT POSSIBLE, I.E., WHEN PERIMETER CONTROL IS USED ON PAVEMENT, HEAVY CONCRETE BLOCKS SHALL BE USED BEHIND THE PERIMETER CONTROL TO HELP STABILIZE DURING RAIN EVENTS.

D. TEMPORARY SEDIMENT FILTERS.
1. DROP-IN SEDIMENT TRAP.
a. PLACE AS RECOMMENDED BY THE MANUFACTURER.

E. TEMPORARY PUMPED SEDIMENT CONTROL DEVICE.
1. INSTALL AS PER MANUFACTURER'S RECOMMENDATIONS.

F. TEMPORARY SLOPE EROSION PROTECTION.
1. PLACE AT ANY AND ALL FINISH SLOPES THAT ARE STEEPER THAN 10H:1V.
2. SEED AND FERTILIZE PER SPECIFICATION 32 9219 PRIOR TO INSTALLING TEMPORARY SLOPE EROSION PROTECTION.
3. BONDED FIBER MATRIX.
a. INSTALL THE BFM AS PER THE MANUFACTURER'S INSTRUCTIONS WITH THE FOLLOWING MINIMUM GUIDELINES.
1) THE BFM SHALL BE APPLIED WITH HYDRAULIC SPRAY EQUIPMENT BY A MANUFACTURER'S CERTIFIED APPLICATOR.
2) APPLICATION SHALL BE DONE AT LEAST 24 HOURS IN ADVANCE OF PROJECTED RAINFALL TO ALLOW THE BFM MULCH ADEQUATE TIME TO DRY.
3) THE BFM MULCH SHALL BE APPLIED IN TWO STAGES (ONE-HALF RATE) WITH AMPLE TIME TO DEWATER THE FIRST APPLICATION.
4) THE BFM MULCH SHALL BE APPLIED FROM AT LEAST TWO ALTERNATE DIRECTIONS, PREFERABLY 90 DEGREES APART, IF POSSIBLE, TO ENSURE ALL SOIL FACES ARE COVERED.
5) THE INSTALLATION RATE OF THE BFM MULCH SHALL BE 3500 LBS PER ACRE, MINIMUM AND 100% COVERAGE.
4. EROSION CONTROL BLANKET.
a. INSTALL AS PER MANUFACTURER'S RECOMMENDATIONS.

3.04 MAINTENANCE

A. INSPECT PREVENTIVE MEASURES WEEKLY, WITHIN 24 HOURS AFTER THE END OF ANY STORM THAT PRODUCES 0.5 INCHES OR MORE RAINFALL AT THE PROJECT SITE, AND DAILY DURING PROLONGED RAINFALL.

B. REPAIR DEFICIENCIES IMMEDIATELY.

C. TEMPORARY SILT FENCES:
1. PROMPTLY REPLACE FABRIC THAT DETERIORATES UNLESS NEED FOR FENCE HAS PASSED.
2. REMOVE SILT DEPOSITS THAT EXCEED ONE-THIRD OF THE HEIGHT OF THE FENCE.
3. REPAIR FENCES THAT ARE UNDERCUT BY RUNOFF OR OTHERWISE DAMAGED, WHETHER BY RUNOFF OR OTHER CAUSES.

D. TEMPORARY CONSTRUCTION EXIT.
1. PERIODIC ADDITION OF ROCK, OR REMOVAL AND REPLACEMENT OF PAD SHALL BE PROVIDED AS VOIDS BECOME FILLED WITH SOIL.

E. TEMPORARY PUMPED SEDIMENT CONTROL DEVICE.
1. REPLACE THE UNIT WHEN 1/2 FULL OF SEDIMENT OR WHEN SEDIMENT HAS REDUCED THE FLOW RATE OF THE PUMP DISCHARGE TO AN IMPRACTICAL RATE.

F. PLACE SEDIMENT IN APPROPRIATE LOCATIONS ON SITE; DO NOT REMOVE FROM SITE.

3.05 CLEAN UP

A. REMOVE TEMPORARY MEASURE AFTER PERMANENT VEGETATION HAS BEEN ESTABLISHED.

B. WHERE REMOVAL OF TEMPORARY MEASURES WOULD LEAVE EXPOSED SOIL, SHAPE SURFACE TO AN ACCEPTABLE GRADE AND FINISH TO MATCH ADJACENT GROUND SURFACES.

END OF SECTION

IMPAIRED WATERS MAP

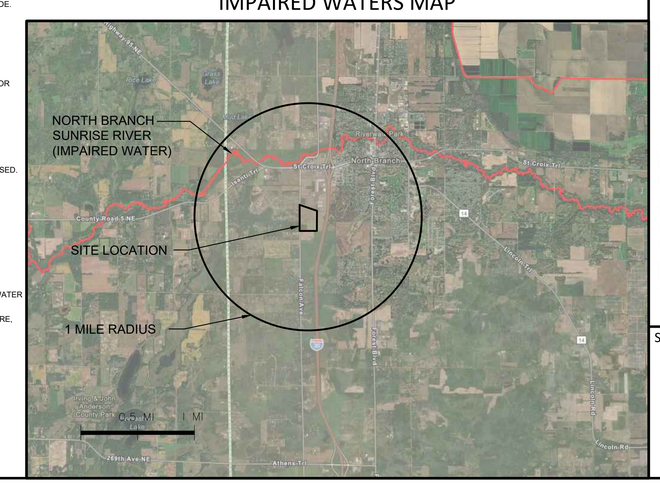

REV NO.	DATE	DESCRIPTION
1	04/01/2025	REVISION PER CITY REVIEW
2	04/24/2025	REVISION PER CITY REVIEW

DATE: 04/24/2025
DESIGN BY: MJM
DRAWN BY: MJM
CHECKED BY: CJD
DWG FILE: SWPPP
FILE NO.: 22-0030.00

I hereby certify that this plan, specification, or report was prepared by me or under my direct supervision and that I am a duly Licensed Professional Engineer under the laws of the State of Minnesota.

NOT FOR CONSTRUCTION

Signed: Christopher J. Dahn
Date: Lic. No. 58628

BOGART, PEDERSON & ASSOCIATES, INC.
LAND SURVEYING
CIVIL ENGINEERING
ENVIRONMENTAL SERVICES
13076 FIRST STREET, BECKER, MN 55308-9322
TEL: 763-262-8822 FAX: 763-262-8844

CEDAR RIDGE COMMUNITY LLC
CEDAR RIDGE COMMUNITY
City of North Branch, Chisago County, MN

SWPPP NARRATIVE

SHEET NO.
C8.3

4/24/2025 3:14 PM N:\Projects Current\22-0030.02 Becker North Branch Plat\Civil\CAD Files\NB Cover\SWPPP.dwg

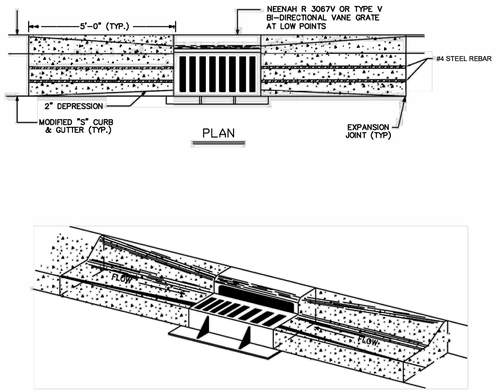

NOTE: MODIFIED "S" CURB & GUTTER TO BE FORMED INTO B618 TYPE CURB AT CATCH BASIN CASTING

NORTH BRANCH	CITY OF NORTH BRANCH SURMOUNTABLE CURB AND GUTTER AT CATCH BASIN NO SCALE	2025 - STANDARD DETAIL DETAIL NO. RDW - 004

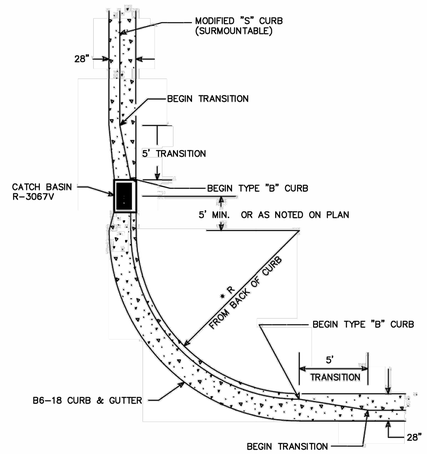

NOTES:
1. SEE STANDARD DETAIL PLATE FOR CONCRETE CURB AND GUTTER DETAILS

NORTH BRANCH	CITY OF NORTH BRANCH STREET RADIUS FOR CONCRETE CURB AND GUTTER NO SCALE	2025 - STANDARD DETAIL DETAIL NO. RDW - 005

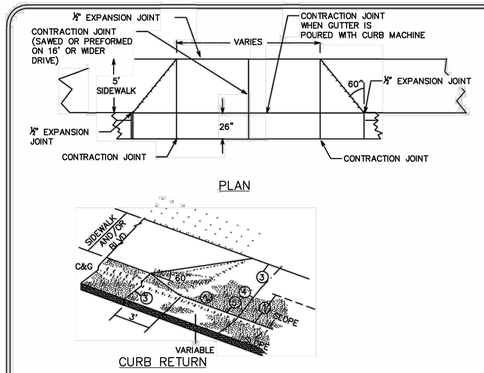

① WITHOUT SIDEWALK PAVEMENT ONLY TO END OF CURB RETURN WHEN ENTRANCE IS UNSURFACED OR CONSTRUCTION IS NOT NEEDED BEYOND THIS POINT.
② WITH SIDEWALK PAVEMENT TO BACK EDGE OF SIDEWALK PAID FOR AS CONCRETE DRIVEWAY PAVEMENT
③ 1/2" EXPANSION JOINT
④ CONTRACTION JOINT (FORMED OR SAWED)
⑤ DRIVEWAY NEED NOT BE POURED MONOLITHICALLY WITH CURB & GUTTER

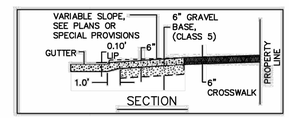

NOTE:
1 PAYMENT SHALL BE FROM BACK OF CURB
2 WHERE SIDEWALKS EXIST OR ARE PROPOSED THE DRIVEWAY APRON SHALL EXTEND TO THE BACK OF SIDEWALK
3 #4 STEEL AT 2' OC TO BE USED WHEN DRIVEWAY SLAB IS NOT POURED INTEGRAL WITH GUTTER

NORTH BRANCH	CITY OF NORTH BRANCH TYPICAL RESIDENTIAL CONCRETE DRIVEWAY APRON NO SCALE	2025 - STANDARD DETAIL DETAIL NO. RDW - 006

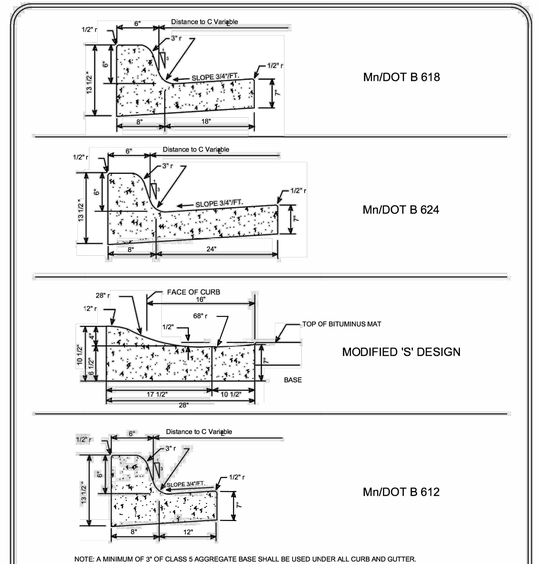

NOTE: A MINIMUM OF 3" OF CLASS 5 AGGREGATE BASE SHALL BE USED UNDER ALL CURB AND GUTTER.

NORTH BRANCH	CITY OF NORTH BRANCH CONCRETE CURB AND GUTTER NO SCALE	2025 - STANDARD DETAIL DETAIL NO. RDW - 003

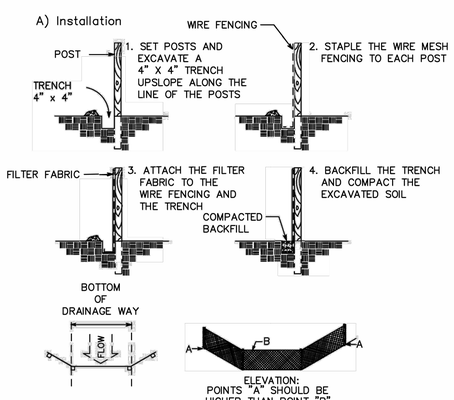

B) Maintenance
1. FILTER BARRIERS SHALL BE INSPECTED IMMEDIATELY AFTER EACH RAINFALL AND AT LEAST DAILY DURING PROLONGED RAINFALL. ANY REQUIRED REPAIRS SHALL BE MADE IMMEDIATELY.
2. SHOULD THE FABRIC DECOMPOSE OR BECOME INEFFECTIVE PRIOR TO THE END OF THE EXPECTED USEABLE LIFE AND THE BARRIER STILL BE NECESSARY, THE FABRIC SHALL BE REPLACED PROMPTLY.
3. SEDIMENT DEPOSITS SHOULD BE REMOVED AFTER EACH STORM EVENT. THEY MUST BE REMOVED WHEN DEPOSITS REACH APPROXIMATELY 1/3 THE HEIGHT OF THE BARRIER.
4. ANY SEDIMENT DEPOSITS REMAINING IN PLACE AFTER THE SILT FENCE OR FILTER BARRIER IS NO LONGER REQUIRED SHALL BE DRESSED TO CONFORM WITH THE EXISTING GRADE, PREPARED AND SEEDED, OR REMOVED

NORTH BRANCH	CITY OF NORTH BRANCH PLACEMENT AND CONSTRUCTION OF SILT FENCE NO SCALE	2025 - STANDARD DETAIL DETAIL NO. ERO-001

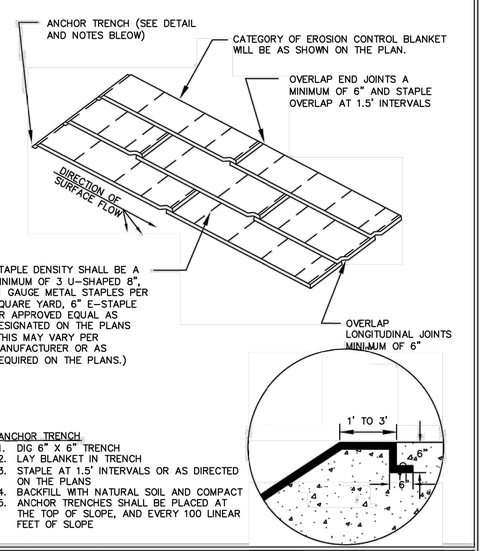

ANCHOR TRENCH
1. DIG 6" X 6" TRENCH
2. LAY BLANKET IN TRENCH
3. STAPLE AT 1.5' INTERVALS OR AS DIRECTED ON THE PLANS
4. BACKFILL WITH NATURAL SOIL AND COMPACT
5. ANCHOR TRENCHES SHALL BE PLACED AT THE TOP OF SLOPE, AND EVERY 100 LINEAR FEET OF SLOPE

NORTH BRANCH	CITY OF NORTH BRANCH EROSION CONTROL BLANKET NO SCALE	2025 - STANDARD DETAIL DETAIL NO. ERO-006

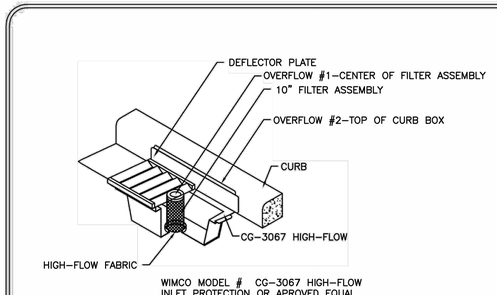

CURB AND GUTTER INLET PROTECTION
NO SCALE

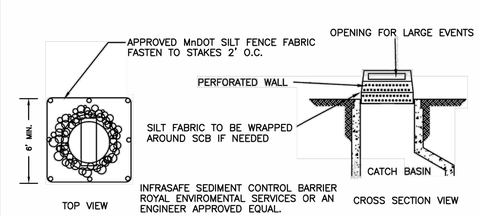

INFRASAFE SEDIMENT CONTROL BARRIER
ROYAL ENVIROMENTAL SERVICES OR AN ENGINEER APPROVED EQUAL.

REAR YARD INLET PROTECTION
NO SCALE

NORTH BRANCH	CITY OF NORTH BRANCH STORM SEWER INLET PROTECTION NO SCALE	2025 - STANDARD DETAIL DETAIL NO. ERO-003

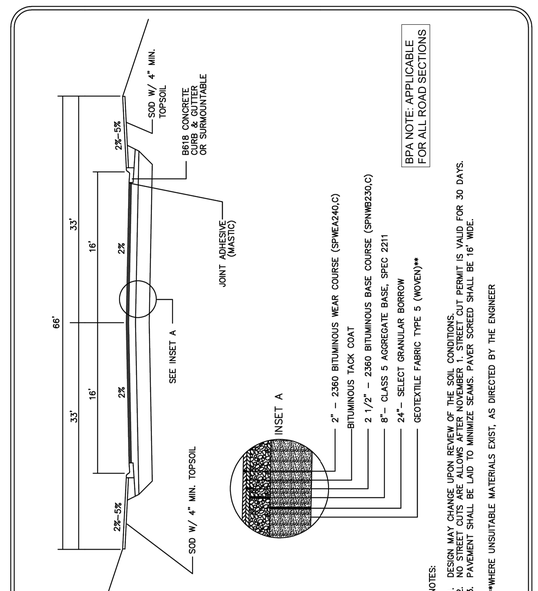

NOTES:
1. DESIGN MAY CHANGE UPON REVIEW OF THE SOIL CONDITIONS.
2. NO STREET CUTS ARE ALLOWS AFTER NOVEMBER 1. STREET CUT PERMIT IS VALID FOR 30 DAYS.
3. PAVEMENT SHALL BE LAID TO MINIMIZE SEAMS. PAVER SCREED SHALL BE 16' WIDE.

**WHERE UNSUITABLE MATERIALS EXIST, AS DIRECTED BY THE ENGINEER

NORTH BRANCH	CITY OF NORTH BRANCH TYPICAL RESIDENTIAL URBAN STREET NO SCALE	2025 STANDARD DETAIL DETAIL NO. RDW - 001

REV NO.	DATE	DESCRIPTION
1	04/01/2025	REVISION PER CITY REVIEW
2	04/24/2025	REVISION PER CITY REVIEW

DATE: 04/24/2025
DESIGN BY: M.J.M
DRAWN BY: M.J.M
CHECKED BY: C.J.D
DWG FILE: DETAILS
FILE NO.: 22-0030.00

I hereby certify that this plan, specification, or report was prepared by me or under my direct supervision and that I am a duly Licensed Professional Engineer under the laws of the State of Minnesota.

Signed: Christopher J. Dahn
Date: Lic. No. 58628

NOT FOR CONSTRUCTION

BOGART, PEDERSON & ASSOCIATES, INC.
LAND SURVEYING
CIVIL ENGINEERING
ENVIRONMENTAL SERVICES
13076 FIRST STREET, BECKER, MN 55308-9322
TEL: 763-262-9622 FAX: 763-262-9644

CEDAR RIDGE COMMUNITY LLC
CEDAR RIDGE COMMUNITY
City of North Branch, Chisago County, MN

DETAILS

SHEET NO.
C9.1

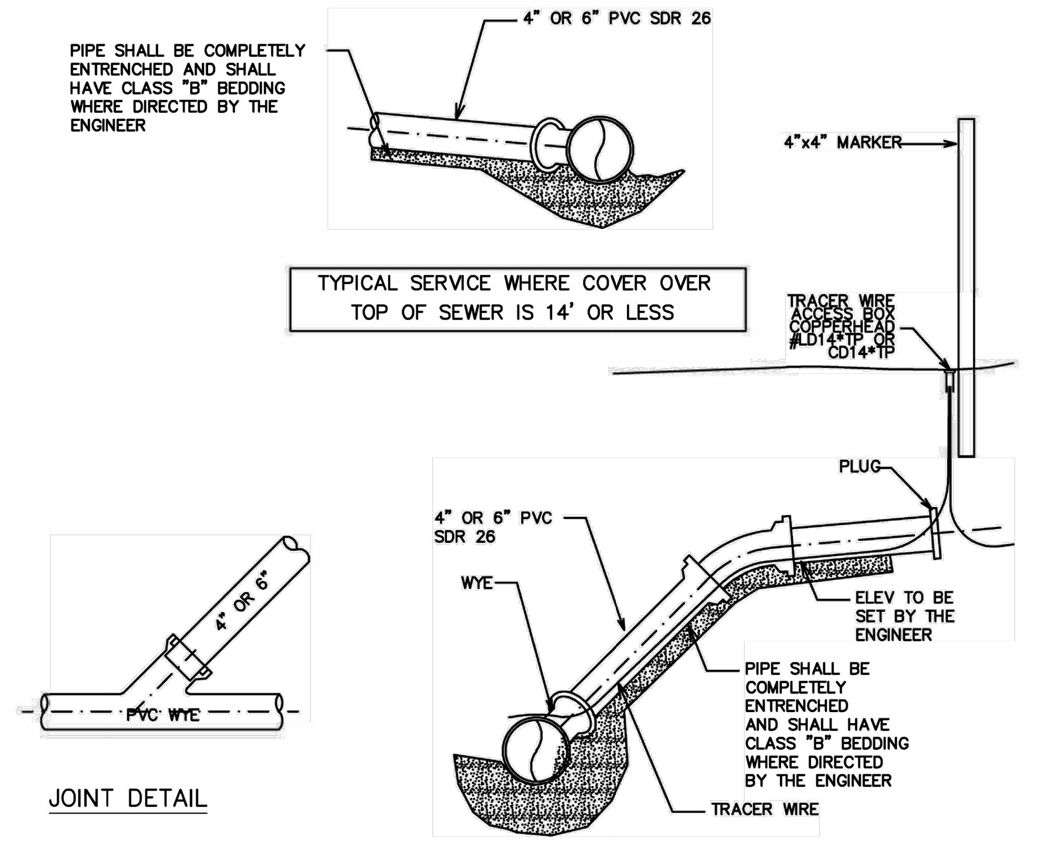

NOTES:

1) ALL SERVICE CONNECTIONS INCLUDING NECESSARY BENDS AND SPECIAL FITTINGS SHALL BE PAID FOR AT THE CONTRACT UNIT PRICE BID PER LINEAR FOOT OF 4" OR 6". NO ADDITIONAL COMPENSATION SHALL BE ALLOWED FOR CONCRETE ENCASEMENT OR PIPE BEDDING.
2) ALL SERVICE CONNECTIONS SHALL TERMINATE 10' INSIDE PROPERTY LINE. UNLESS OTHERWISE APPROVED BY THE ENGINEER.
3) SERVICE STUB SHALL BE PLUGGED AND MARKED WITH A 4" x 4" TIMBER PROTRUDING 3' OUT OF GROUND. (PAINTED GREEN)
4) NO SADDLES WILL BE ALLOWED
5) RETRO-FIT INSTALLATIONS TO BE CONSTRUCTED BY CUTTING IN A PVC WYE AND PVC SLEEVE
6) SEWER SERVICES ARE TO BE LOCATED 3' DOWNSTREAM OF WATER SERVICE IF IN THE SAME TRENCH

CITY OF NORTH BRANCH | 2025 - STANDARD DETAIL
SANITARY SEWER SERVICE DETAIL
NO SCALE
DETAIL NO. SAN-001

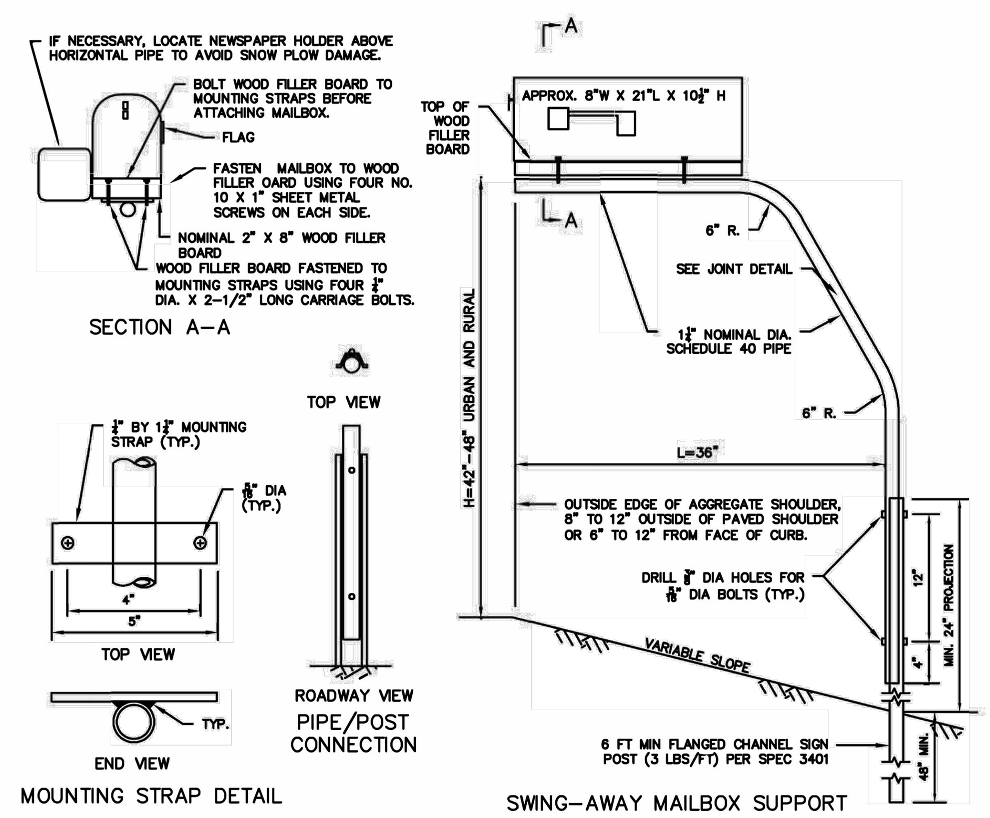

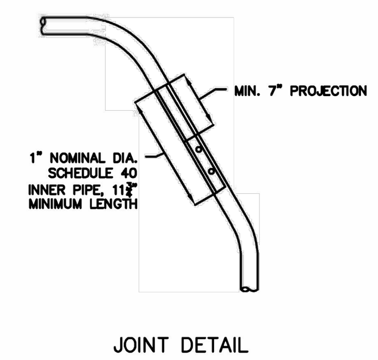

NOTES:

MAILBOX LOCATIONS SHOW BE STAKED BEFORE INSTALLATION FOR PROPER HEIGHT AND DISTANCE FROM ROADWAY. ONCE STAKED, THE INSTALLER MUST NOTIFY THE ENGINEER AND THE POST OFFICE. THE ENGINEER AND THE POSTMASTER SHALL APPROVE THE STAKED LOCATIONS PRIOR TO FINAL INSTALLATION.

THE MINIMUM SPACING (CENTER TO CENTER) BETWEEN MULTIPLE SUPPORTS SHALL BE EQUAL TO THE HEIGHT OF THE MAILBOX SUPPORT.

CITY OF NORTH BRANCH | 2025 - STANDARD DETAIL
MAIL BOX INSTALLATION DETAIL
NO SCALE
DETAIL NO. RDW - 013

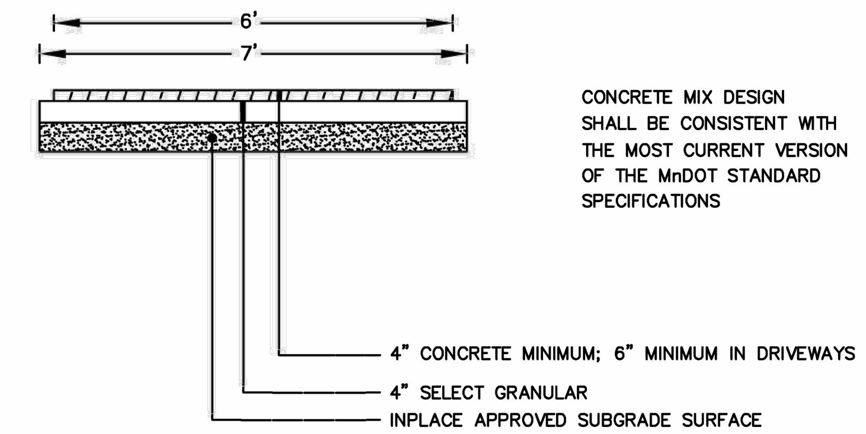

CONCRETE MIX DESIGN SHALL BE CONSISTENT WITH THE MOST CURRENT VERSION OF THE MnDOT STANDARD SPECIFICATIONS

6' WIDE CONCRETE WALK
TYPICAL SECTION

CITY OF NORTH BRANCH | 2025 - STANDARD DETAIL
TYPICAL CONCRETE WALK
NO SCALE
DETAIL NO. RDW - 012

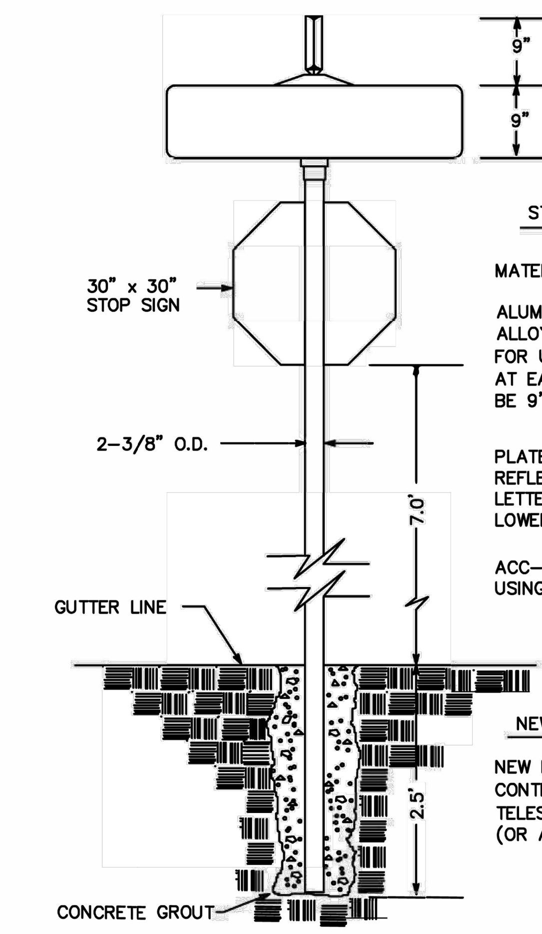

STREET SIGN SPECIFICATIONS

MATERIAL:

ALUMINUM BLANKS SHALL BE CONSTRUCTED OF 5052-H38 ALLOY, HAVE A GAUGE OF .080, BE NOTCHED FOR USE WITH ACC-4 BRACKETS, HAVE HOLES PUNCHED AT EACH END FOR BOLTING TOGETHER AND BE 9" AS REQUIRED.

PLATES SHALL BE COVERED WITH HIGH INTENSITY REFLECTIVE SHEETING, SCREENED GREEN WITH MARGIN. LETTERING SHALL BE 6" SERIES C, ALL U.C. LOWER CASE LETTERING SHALL BE 4"

ACC-4 BRACKETS ARE TO BE ALUMINUM DESIGNED FOR USING 9" PLATES AS REQUIRED.

NEW POSTS SPECIFICATIONS

NEW POSTS USED FOR MOUNTING STREET NAME/TRAFFIC CONTROL SIGNS, SHALL VARY IN LENGTH, SHALL BE TELESPAR 2"X2"X14 GAUGE OR 3LB GALVANIZED CHANNEL (OR APPROVED EQUAL)

NAME	ABBREVIATION
AVENUE	Ave
BOULEVARD	Blvd
CIRCLE	Cir
COURT	Ct
DRIVE	Dr
EAST	E
PARKWAY	Pkwy
PLACE	Pl
STREET	St
TERRACE	Ter
TRAIL	Trl
WEST	W

CITY OF NORTH BRANCH | 2025 - STANDARD DETAIL
TYPICAL STREET SIGN
NO SCALE
DETAIL NO. RDW - 010

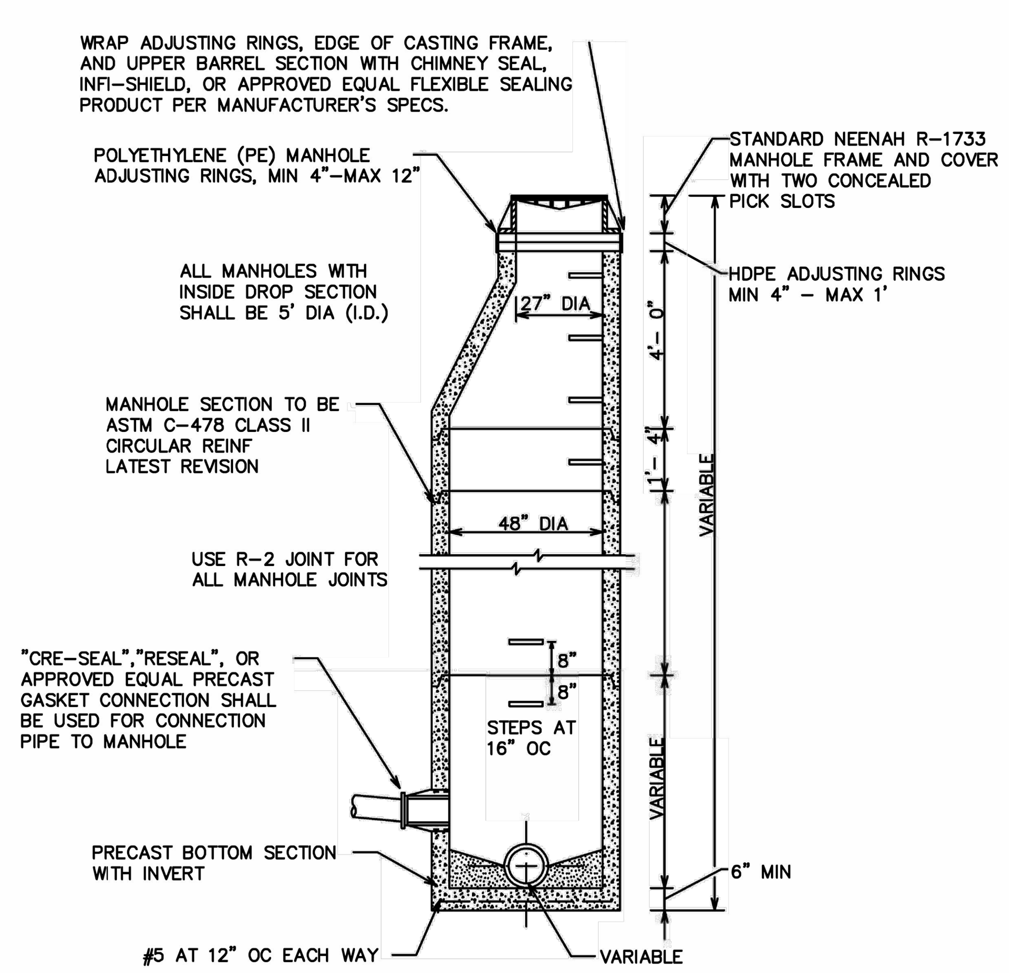

NOTES:

1. MANHOLE STEPS SHALL BE CAST IRON OR MA MODEL PS-I-PF (BY MA INDUSTRIAL INC.) CONFORMING TO ALL OSHA REGULATIONS AND SPACED 16" OC.
2. ALL MANHOLE JOINTS SHALL BE SEAL WRAPPED AS DESCRIBED IN THE SPECIFICATION (INCIDENTAL).

CITY OF NORTH BRANCH | 2025 - STANDARD DETAIL
STANDARD MANHOLE FOR SANITARY SEWER
NO SCALE
DETAIL NO. SAN-002

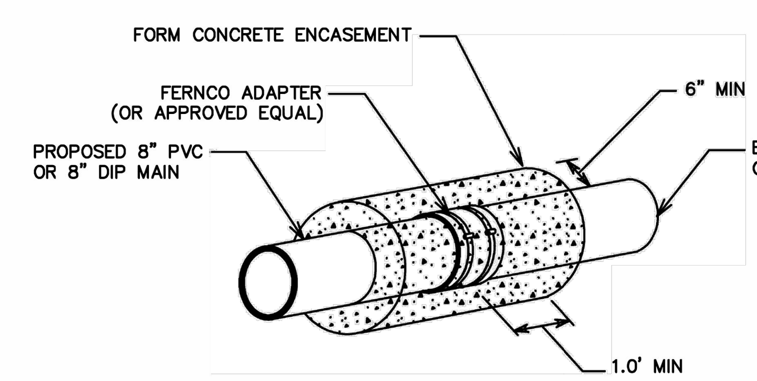

FOR 8" PVC = FERNCO #1002-88 OR EQUAL
FOR 8" DIP = FERNCO # 1003-85 OR EQUAL

NOTES:

1) ALL FERNCO ADAPTORS USED MUST BE MADE FOR CLAY TO PVC TRANSITIONS
2) FOR ABANDONED SEWER/WATER LINES, SEWER LINES SHALL BE REMOVED TO THE MAIN AND CAPPED AT WYE. WATERMAIN SERVICES SHALL BE REMOVED TO THE MAIN WITH THE CORPORATION STOP REMOVED AND CAPPED WITH A BRASS PLUG.

CITY OF NORTH BRANCH | 2025 - STANDARD DETAIL
SANITARY SEWER MAIN TO CLAY PIPE CONNECTION DETAIL
NO SCALE
DETAIL NO. SAN - 003

NOTE:
1. FRAME AND SOLID COVER TO BE NEENAH NO. R-1733 WITH NO.MF 25572 CONCEALED PICKHOLE OR APPROVED EQUAL.
2. USE NEENAH R-1755G FOR WATERTIGHT APPLICATIONS.

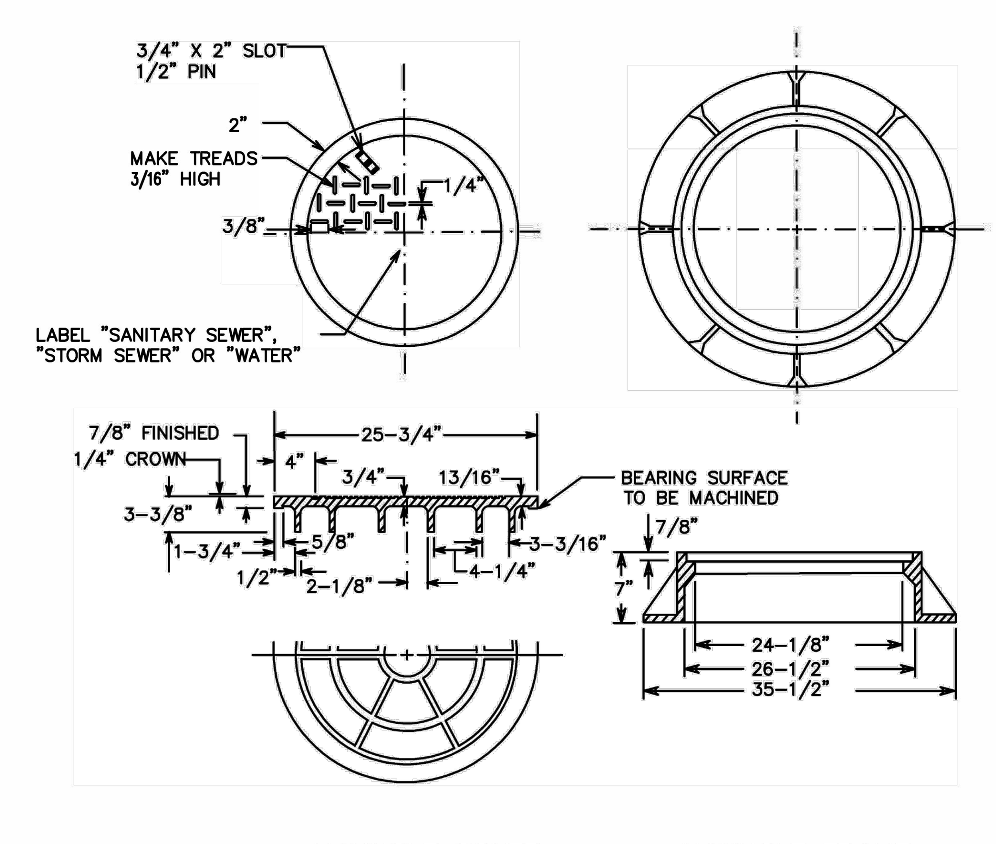

MANHOLE COVER | MANHOLE FRAME

CITY OF NORTH BRANCH | 2025 - STANDARD DETAIL
STANDARD SANITARY & STORM SEWER FRAME & COVER FOR MANHOLE
NO SCALE
DETAIL NO. SAN-004

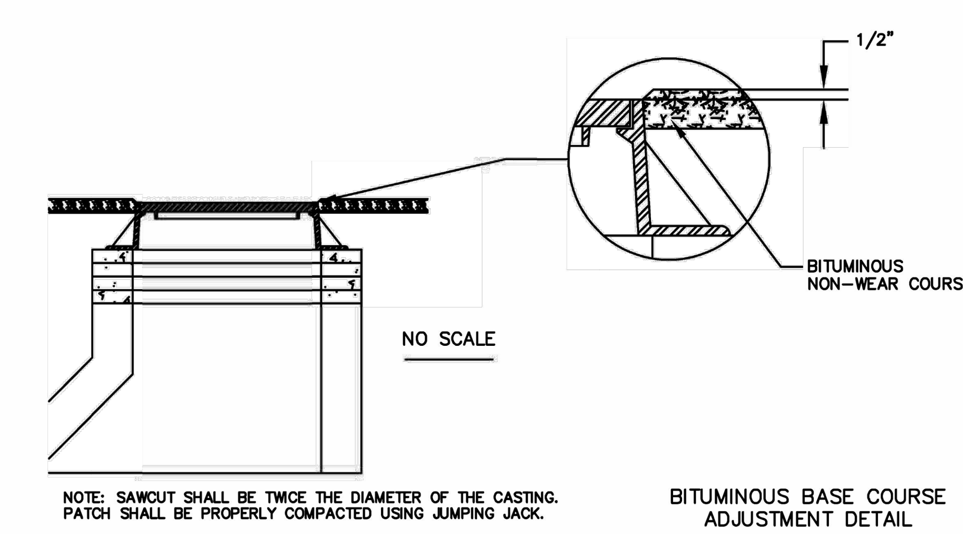

NOTE: SAWCUT SHALL BE TWICE THE DIAMETER OF THE CASTING. PATCH SHALL BE PROPERLY COMPACTED USING JUMPING JACK.

BITUMINOUS BASE COURSE ADJUSTMENT DETAIL

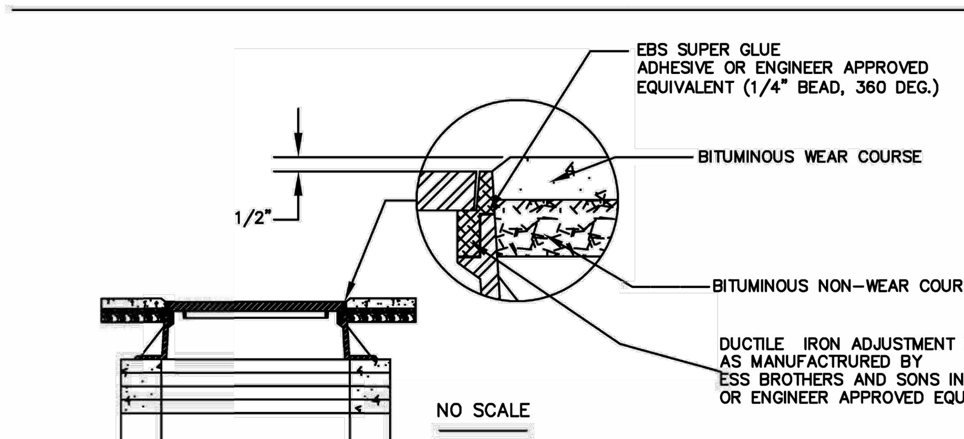

NOTES:
1. THE HEIGHT OF THE DUCTILE IRON ADJUSTMENT RING IS DETERMINED BY THE THICKNESS OF THE OVERLAY.
2. DUCTILE IRON ADJUSTMENT RINGS TO BE INSTALLED AS PER MANUFACTURE'S RECOMENDATION.
3. 2- PIECE AND CAST IRON ADJUSTMENT RINGS ARE NOT ALLOWED

BITUMINOUS WEAR COURSE ADJUSTMENT DETAIL

CITY OF NORTH BRANCH | 2025 - STANDARD DETAIL
CASTING ADJUSTMENT FOR SANITARY AND STORM SEWER
NO SCALE
DETAIL NO. SAN-005

REV NO.	DATE	DESCRIPTION
1	04/01/2025	REVISION PER CITY REVIEW
2	04/24/2025	REVISION PER CITY REVIEW

DATE: 04/24/2025
DESIGN BY: MJM
DRAWN BY: MJM
CHECKED BY: CJD
DWG FILE: DETAILS
FILE NO.: 22-0030.00

I hereby certify that this plan, specification, or report was prepared by me or under my direct supervision and that I am a duly Licensed Professional Engineer under the laws of the State of Minnesota.

NOT FOR CONSTRUCTION

Signed: Christopher J. Dahn
Date: Lic. No. 58628

BOGART, PEDERSON & ASSOCIATES, INC.
LAND SURVEYING
CIVIL ENGINEERING
ENVIRONMENTAL SERVICES
13076 FIRST STREET, BECKER, MN 55308-9322
TEL: 763-262-8822 FAX: 763-262-8844

CEDAR RIDGE COMMUNITY LLC
CEDAR RIDGE COMMUNITY
City of North Branch, Chisago County, MN

DETAILS

SHEET NO.
C9.2

OUTSIDE DROP SECTION FOR SANITARY SEWER (SAN-007)

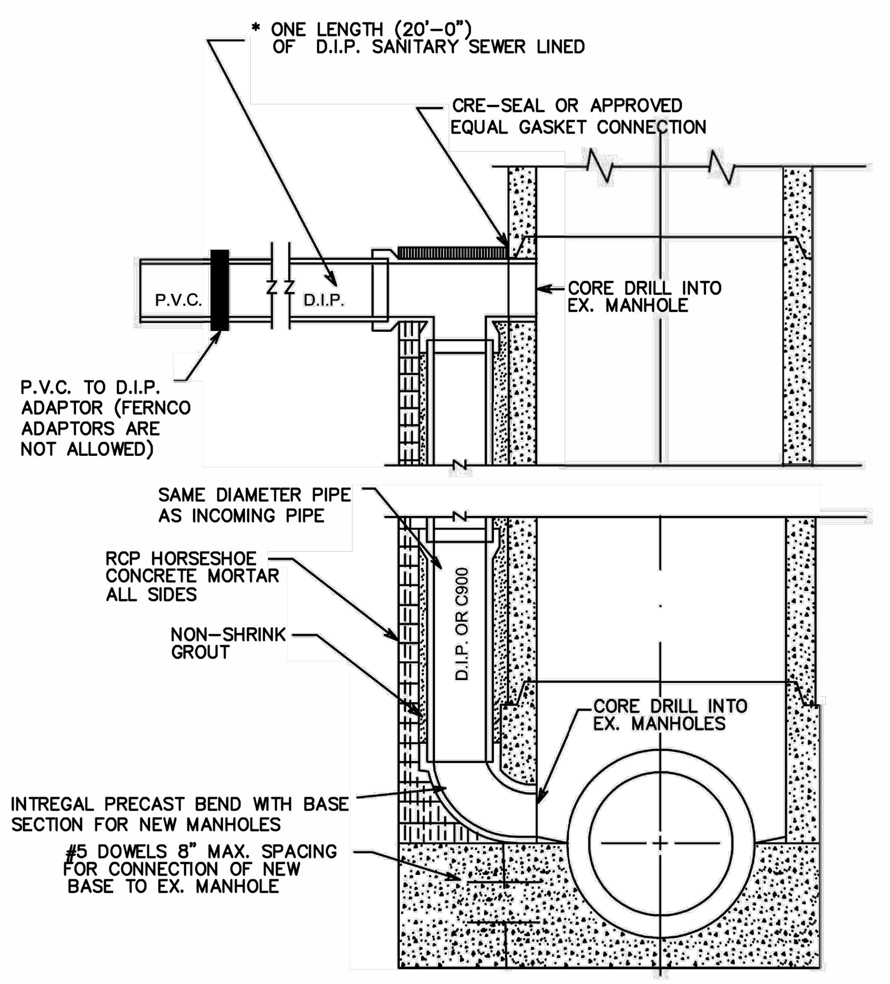

NORTH BRANCH (EST. 1881)	CITY OF NORTH BRANCH OUTSIDE DROP SECTION FOR SANITARY SEWER NO SCALE	2025 - STANDARD DETAIL DETAIL NO. SAN-007

STANDARD STORM SEWER CATCH BASIN MANHOLE (STM-002)

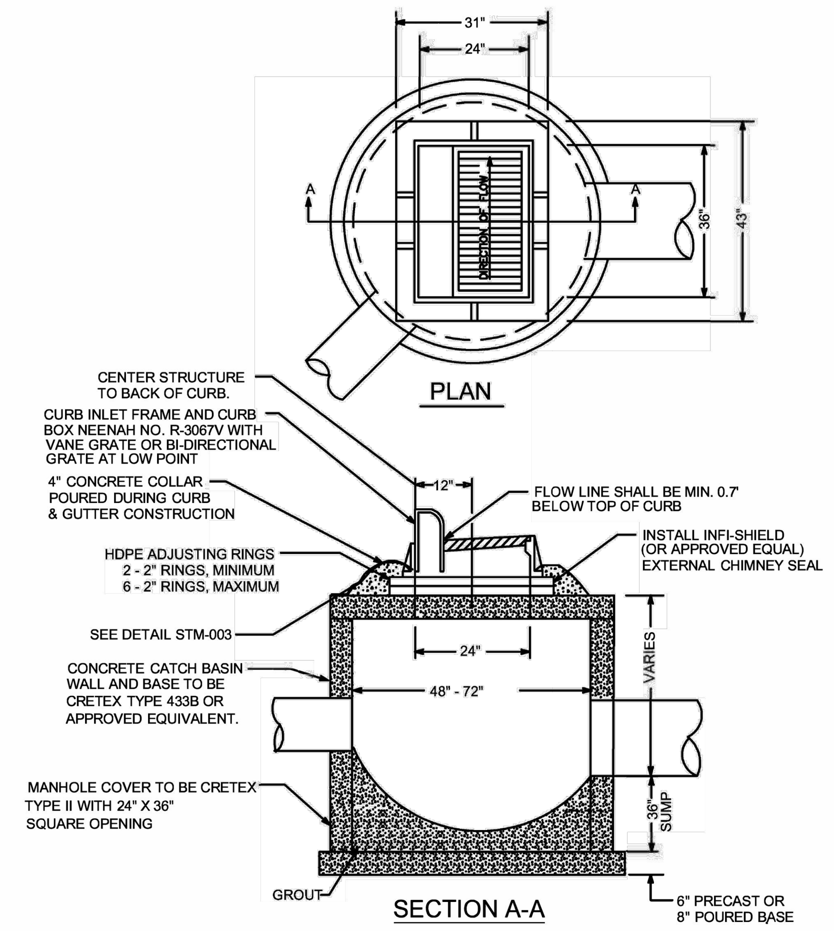

NOTES:
1. REINFORCING TO CONSIST OF #4 BARS @ 8" O.C. BOTH WAYS
2. MANHOLE STEPS SHALL BE CAST ALUMINUM OR MA INDUSTRY WITH VINYL COATING OR APPROVED EQUIVALENT AND SHALL BE LOCATED @ 16" O.C. PARALLEL WITH THE CURB
3. GROUT BOTTOM TO DRAIN TO CENTER
4. PIPE CUT-OUTS TO BE LOCATED WHERE REQUIRED
5. ADJUSTING RINGS SHALL BE HDPE INSTALLED ACCORDING TO MANUFACTURERS' REQUIREMENTS.
6. WIMCO OR APPROVED EQUAL INLET PROTECTION SHALL BE MAINTAINED AND KEPT IN GOOD SHAPE UNTIL WEAR COURSE IS PAVED
7. SURMOUNTABLE CURB DRIVE OVER CASTING - NEENAH 3501-TB
8. B-618 CURB DRIVE OVER CASTING - NEENAH 3290A

NORTH BRANCH (EST. 1881)	CITY OF NORTH BRANCH STANDARD STORM SEWER CATCH BASIN MANHOLE NO SCALE	2025 - STANDARD DETAIL DETAIL NO. STM-002

STANDARD STORM SEWER MANHOLE, MNDOT 4020 MANHOLE (STM-001)

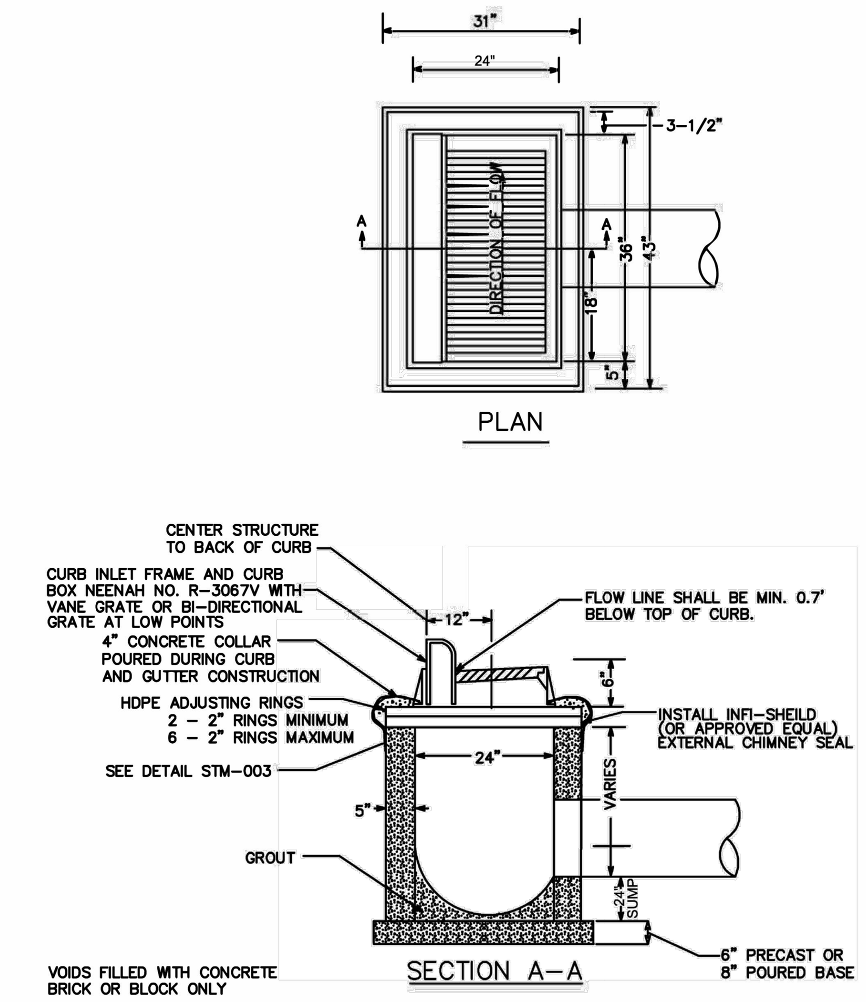

NOTES:
1. REINFORCING TO CONSIST OF #4 BARS @ 8" O.C. BOTH WAYS
2. GROUT BOTTOM TO DRAIN TO CENTER
3. PIPE CUT–OUTS TO BE LOCATED WHERE REQUIRED
4. ADJUSTING RINGS SHALL BE HDPE AND INSTALLED ACCORDING TO MANUFACTURERS' REQUIREMENTS.
5. WIMCO OR APPROVED EQUAL INLET PROTECTION SHALL BE MAINTAINED AND KEPT IN GOOD SHAPE UNTIL WEAR COURSE IS PAVED
6. SURMOUNTABLE CURB DRIVE OVER CASTING – NEENAH 3501–TB
7. B–618 CURB DRIVE OVER CASTING – NEENAH 3290A

NORTH BRANCH (EST. 1881)	CITY OF NORTH BRANCH STANDARD STORM SEWER MANHOLE, MNDOT 4020 MANHOLE NO SCALE	2025 - STANDARD DETAIL DETAIL NO. STM-001

SANITARY SEWER SERVICE CLEANOUT (SAN - 008)

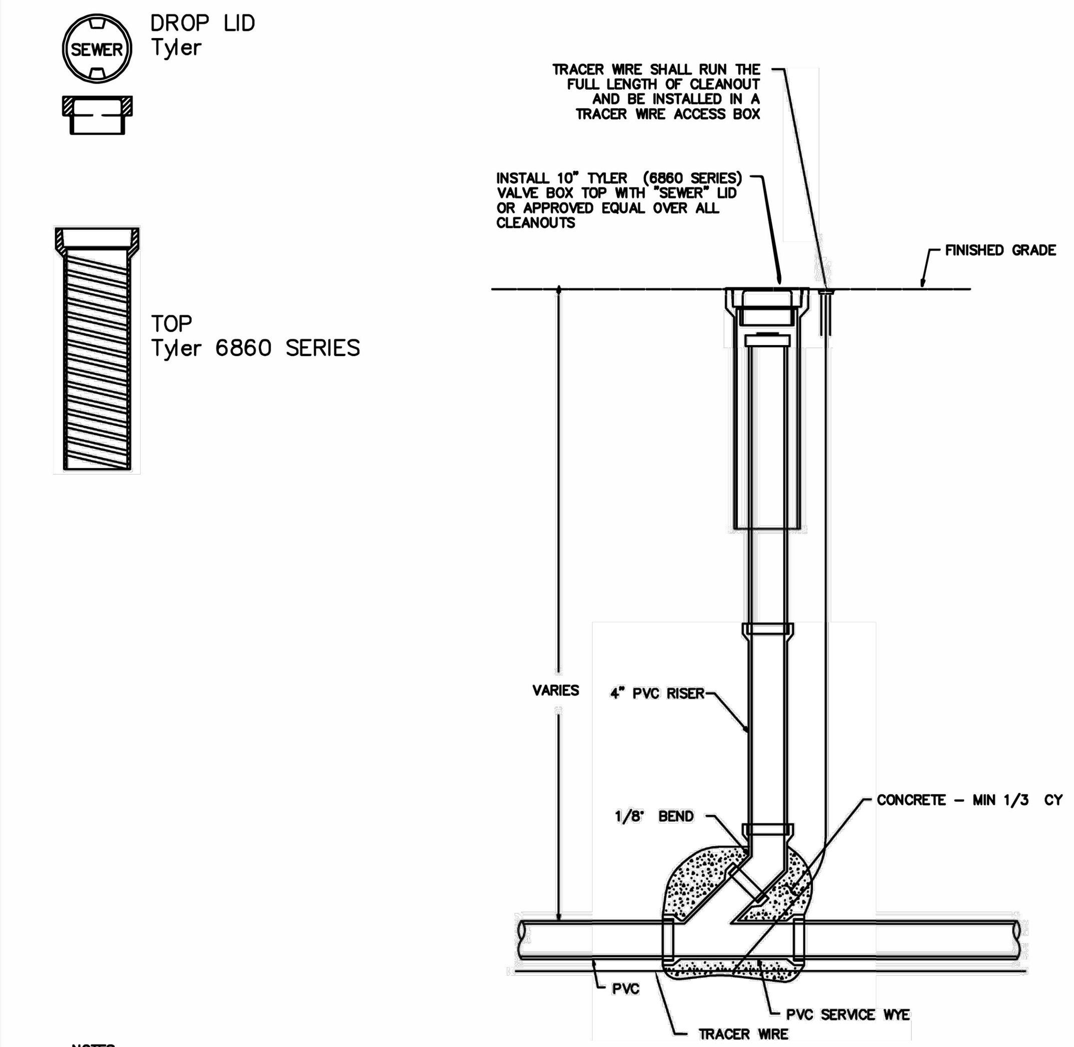

NOTES:
1. TRACER WIRE ACCESS BOX FOR NON–ROADWAY APPLICATIONS SHALL BE GRADE LEVEL COPPERHEAD LITE DUTY #LD14*TP.
2. TRACER WIRE ACCESS BOX FOR CONCRETE/DRIVEWAY APPLICATIONS SHALL BE COPPERHEAD #CD14*TP.
3. CLEANOUTS LOCATED IN DRIVEWAYS SHALL BE COVERED WITH A FORD A–1 METER BOX COVER.

NORTH BRANCH (EST. 1881)	CITY OF NORTH BRANCH SANITARY SEWER SERVICE CLEANOUT NO SCALE	2025 - STANDARD DETAIL DETAIL NO. SAN - 008

TYPICAL TRENCH COMPACTING AND CLASS B BEDDING (SAN-006)

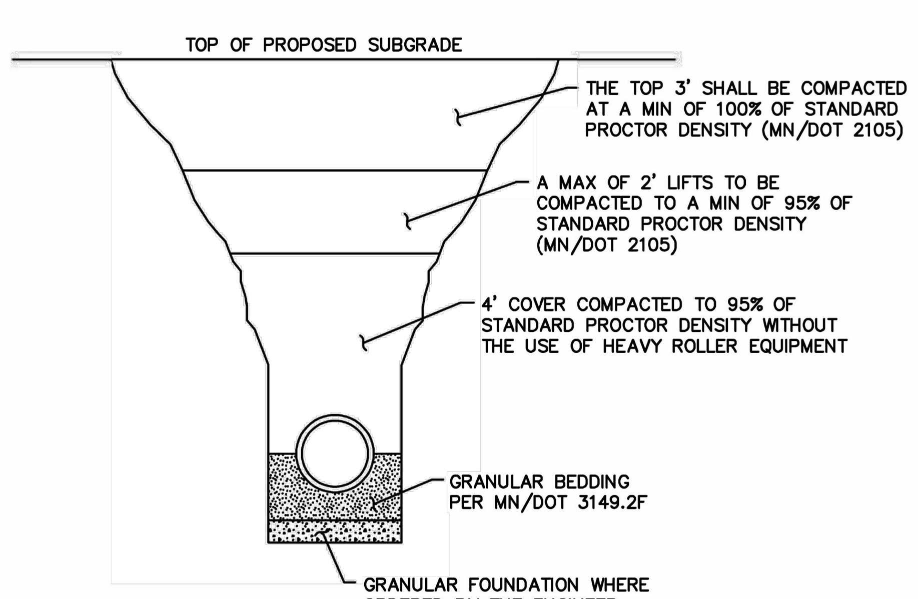

SHOVEL, PLACE, AND HAND COMPACT AROUND PIPE TO 12" ABOVE PIPE. VIBRATORY COMPACTION REQUIRED EACH SIDE OF PIPE, AS DIRECTED BY THE ENGINEER.

NORTH BRANCH (EST. 1881)	CITY OF NORTH BRANCH TYPICAL TRENCH COMPACTING AND CLASS B BEDDING NO SCALE	2025 - STANDARD DETAIL DETAIL NO. SAN-006

CONCRETE COLLAR FOR CATCH BASIN CASTING (STM-003)

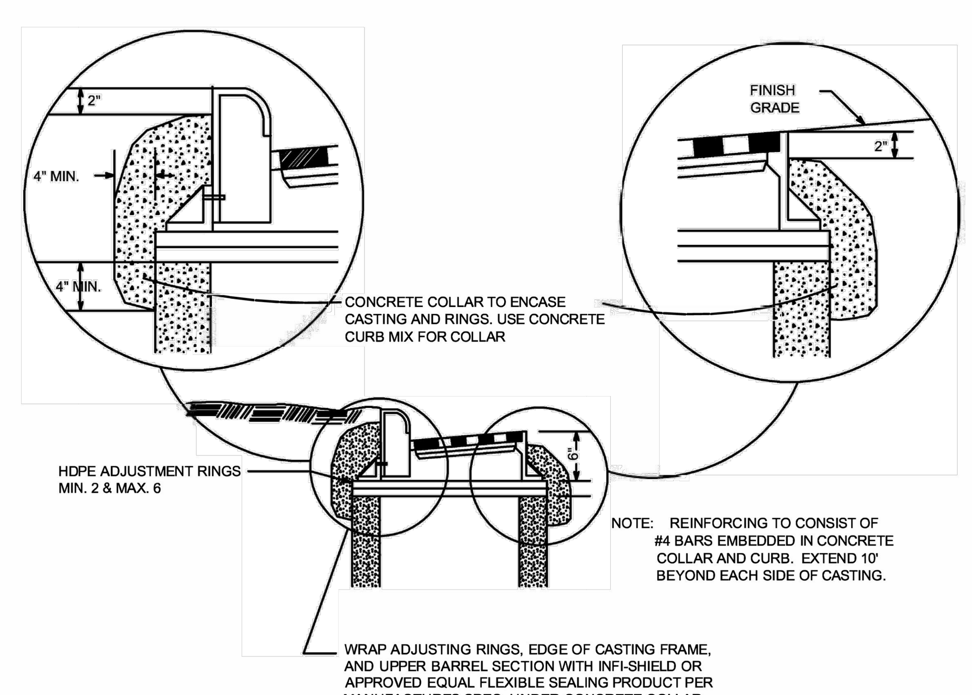

NORTH BRANCH (EST. 1881)	CITY OF NORTH BRANCH CONCRETE COLLAR FOR CATCH BASIN CASTING NO SCALE	2025 - STANDARD DETAIL DETAIL NO. STM-003

FLARED END SECTIONS AND TRASH GUARD DETAIL (STM-005)

See City Detail No. STM–007 for riprap placement.

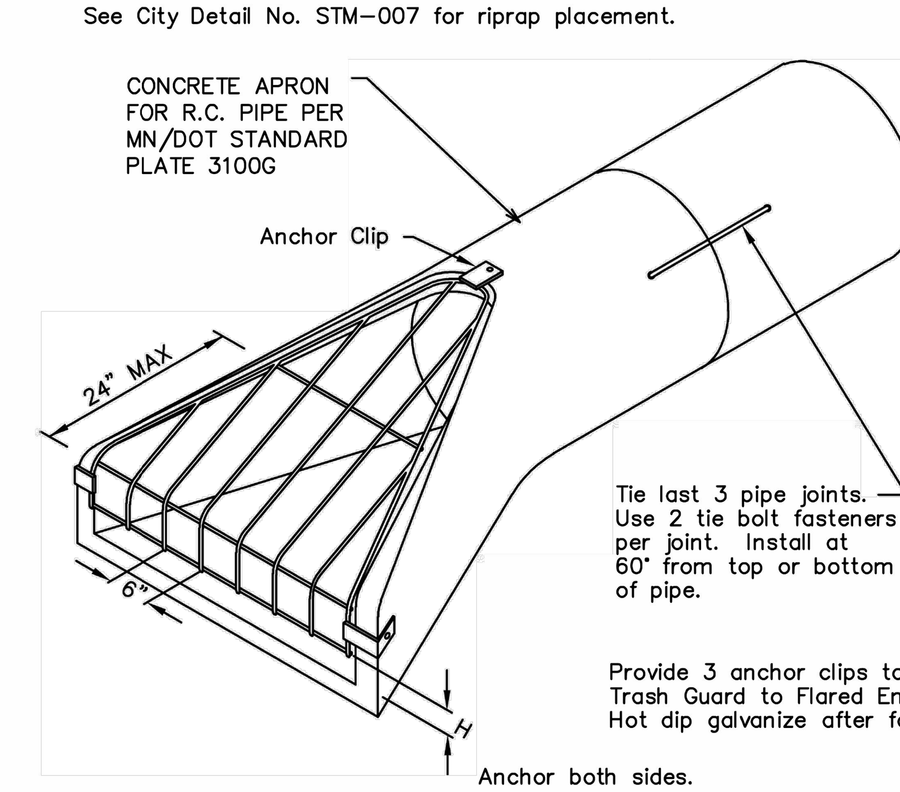

TRASH GUARD SIZING

Pipe Size	Bars	'H'	Bolts
12"–18"	3/4"0	4"	5/8"
21"–42"	1"0	6"	3/4"
48"–72"	1 1/4"0	12"	1"

NOTES:
1. Entire Trash Guard assembly to be HOT–DIP galvanized after fabrication.
2. Size of Trash Guard variable dependent on size of Flared End Section.
3. Trash Guards required on all Aprons 21" and larger unless otherwise noted.
4. Galvanized metal apron per MN/DOT standard plate 3129A to be used with HDPE pipe in green areas.
5. Install 7 foot 3lb galvanized post with 360 degree reflector (X4–13) at all flared end sections.

NORTH BRANCH (EST. 1881)	CITY OF NORTH BRANCH FLARED END SECTIONS AND TRASH GUARD DETAIL NO SCALE	2025 - STANDARD DETAIL DETAIL NO. STM-005

HAND PLACED RIP RAP AT RCP OUTLETS (STM-007)

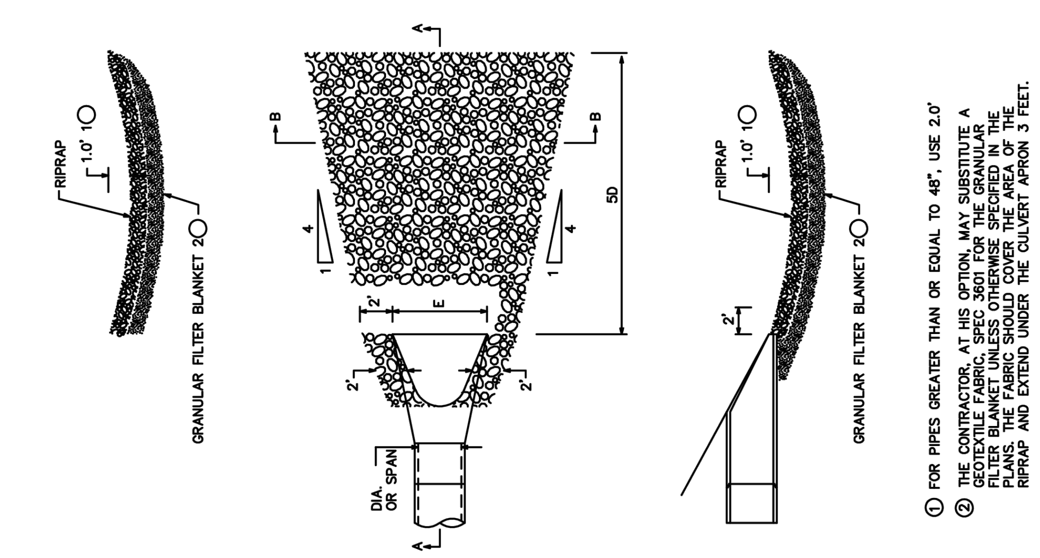

① FOR PIPES GREATER THAN OR EQUAL TO 48", USE 2.0'
② THE CONTRACTOR, AT HIS OPTION, MAY SUBSTITUTE A GEOTEXTILE FABRIC, SPEC 3601 FOR THE GRANULAR FILTER BLANKET UNLESS OTHERWISE SPECIFIED IN THE PLANS. THE FABRIC SHOULD COVER THE AREA OF THE RIPRAP AND EXTEND UNDER THE CULVERT APRON 3 FEET.

DIA ROUND PIPE (IN)	CLASS III D_{50} = 9" 15" DEPTH RIPRAP (CU YD)	CLASS III 7.5" DEPTH GRANULAR FILTER (CU YD)	CLASS IV D_{50} = 12" 18" DEPTH RIPRAP (CU YD)	CLASS IV 9" DEPTH GRANULAR FILTER (CU YD)	CLASS V D_{50} = 15" 24" DEPTH RIPRAP (CU YD)	CLASS V 12" DEPTH GRANULAR FILTER (CU YD)
12	2.1	1.1	2.6	1.3	3.4	1.7
15	2.9	1.4	3.5	1.7	4.6	2.3
18	3.6	1.8	4.4	2.2	5.8	2.9
21	4.6	2.3	5.6	2.8	7.4	3.7
24	5.8	2.9	6.9	3.5	9.2	4.6
27	6.9	3.4	8.3	4.1	11.0	5.5
30	8.3	4.1	9.9	5.0	13.2	6.6
36	11.0	5.5	13.2	6.6	17.6	8.8
42	13.6	6.8	16.4	8.2	21.8	10.9
48	16.8	8.4	20.1	10.1	26.8	13.4
54	19.8	9.9	23.7	11.9	31.6	15.8
60	23.0	11.5	27.6	13.8	36.8	18.4
66	27.0	13.5	32.4	16.2	43.2	21.6
72	31.1	15.6	37.4	18.7	49.8	24.9
84	40.0	20.0	48.0	24.0	64.0	32.0
90	45.5	22.8	54.6	27.3	72.8	36.4

SPAN ROUND PIPE (IN)	CLASS III D_{50} = 9" 15" DEPTH RIPRAP (CU YD)	CLASS III 7.5" DEPTH GRANULAR FILTER (CU YD)	CLASS IV D_{50} = 12" 18" DEPTH RIPRAP (CU YD)	CLASS IV 9" DEPTH GRANULAR FILTER (CU YD)	CLASS V D_{50} = 15" 24" DEPTH RIPRAP (CU YD)	CLASS V 12" DEPTH GRANULAR FILTER (CU YD)
22	3.6	1.8	4.4	2.2	5.8	2.9
28	5.8	2.9	6.9	3.5	9.2	4.6
36	8.1	4.1	9.8	4.9	13.0	6.5
43	11.0	5.5	13.2	6.6	17.6	8.8
51	13.6	6.8	16.4	8.2	21.8	10.9
58	16.5	8.3	19.8	9.9	26.4	13.2
65	19.8	9.9	23.7	11.9	31.6	15.8
73	23.3	11.6	27.9	14.0	37.2	18.6
88	32.4	16.2	38.9	19.4	51.8	25.9
102	43.5	21.8	52.2	26.1	69.6	34.8
115	44.0	22.0	52.8	26.4	70.4	35.2
122	49.3	24.6	59.1	29.6	78.8	39.4
138	61.3	30.6	73.5	36.8	98.0	49.0
154	74.4	37.2	89.3	44.6	119.0	59.5

NOTE: REQUIREMENTS FOR RIPRAP SIZE, THICKNESS, AND FILTER BLANKET WILL BE DESIGNATED IN PLANS.

NORTH BRANCH (EST. 1881)	CITY OF NORTH BRANCH HAND PLACED RIP RAP AT RCP OUTLETS NO SCALE	2025 - STANDARD DETAIL DETAIL NO. STM-007

REV NO.	DATE	DESCRIPTION
1	04/01/2025	REVISION PER CITY REVIEW
2	04/24/2025	REVISION PER CITY REVIEW

DATE: 04/24/2025
DESIGN BY: MJM
DRAWN BY: MJM
CHECKED BY: CJD
DWG FILE: DETAILS
FILE NO.: 22-0030.00

I hereby certify that this plan, specification, or report was prepared by me or under my direct supervision and that I am a duly Licensed Professional Engineer under the laws of the State of Minnesota.

NOT FOR CONSTRUCTION

Signed: Christopher J. Dahn
Date: Lic. No. 58628

BOGART, PEDERSON & ASSOCIATES, INC.
LAND SURVEYING
CIVIL ENGINEERING
ENVIRONMENTAL SERVICES
13076 FIRST STREET, BECKER, MN 55308-9322
TEL: 763-262-8822 FAX: 763-262-8844

CEDAR RIDGE COMMUNITY LLC
CEDAR RIDGE COMMUNITY
City of North Branch, Chisago County, MN

DETAILS

SHEET NO.
C9.3

4/24/2025 3:14 PM N:\Projects Current\22-0030.02 Betzler North Branch Plat\Civil\CAD Files\NB CoverSWPPP.dwg

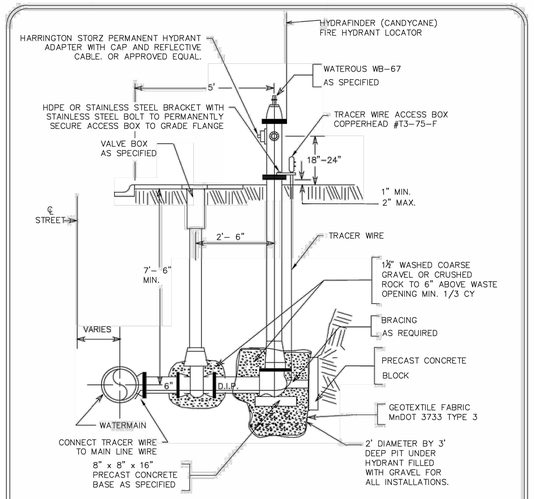

NOTE:
ALL HYDRANT LEADS SHALL BE TIED WITH ¾" GALVANIZED STEEL TIE RODS, EXTENDING FROM TEE TO VALVE AND FROM VALVE TO HYDRANT OR MEGA-LUG BRAND THRUST RETAINER GLANDS AT JOINTS (INCIDENTAL).

CITY OF NORTH BRANCH EST. 1881	CITY OF NORTH BRANCH TYPICAL HYDRANT ASSEMBLY INSTALLATION NO SCALE	2025 - STANDARD DETAIL DETAIL NO. WM-001

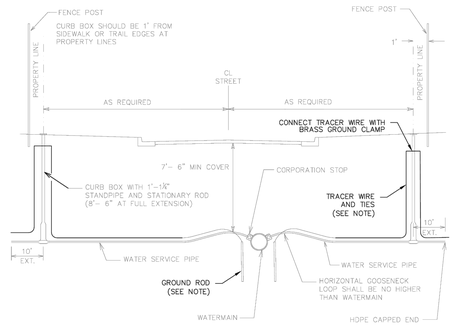

NOTES:
1. CURB BOXES INSTALLED IN AREAS WHERE BOULEVARD IS TO BE CUT AT A LATER DATE SHALL BE INSTALLED AT DEPTH REQUIRED, CURB BOX EXTENTION FOR BOXES EXCEEDING 7.5' IN LENGTH ARE TO BE BID AT CONTRACT PRICE AND SHALL INCLUDE STACK COUPLINGS, CONNECTIONS, ETC.
2. CURB BOX LOCATIONS SHALL BE MARKED WITH A STEEL FENCE POST PAINTED BLUE.
3. WATER SERVICE SHALL BE INSTALLED WITH A HORIZONTAL SEPARATION OF THREE FEET (3') FROM THE SANITARY SEWER SERVICE AND SHALL BE INSTALLED UPSTREAM OF THE SANITARY SEWER SERVICE.
4. CURB BOXES LOCATED IN A DRIVEWAY OR PARKING LOT SHALL BE COVERED WITH A FORD A-1 METER BOX COVER OR ENGINEER APPROVED EQUAL.
5. HDPE WATER SERVICES – INSTALL MAGNESIUM GROUNDING ANODE ROD, LOCATING WIRE, WIRE CONNECTORS, AND TIES PER SPECIFICATIONS.

CITY OF NORTH BRANCH EST. 1881	CITY OF NORTH BRANCH TYPICAL WATER SERVICE NO SCALE	2025 - STANDARD DETAIL DETAIL NO. WM-002

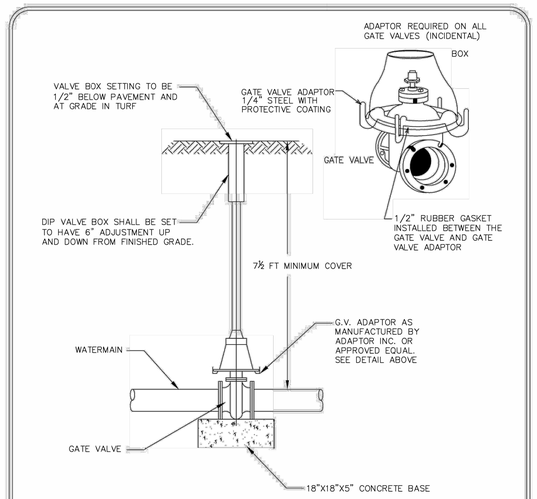

NOTES:
1. VALVE BOX INSERTS ARE NOT ALLOWED UNLESS APPROVED BY THE ENGINEER.
2. VALVE BOXES SHALL BE INSTALLED PLUMB AND SHALL ALLOW A 4" P.V.C. PIPE TO PASS ENTIRELY OVER THE GATE VALVE NUT AFTER INSTALLATION IS COMPLETE.
3. ALL VALVES SHALL BE TIED WITH 3/4" THREADED TIE RODS TO THE MAIN. MEGA LUGS MAY BE USED IN LIEU OF TIE RODS.
4. THE INITIAL & FINAL RAISING OF VALVE BOXES SHALL BE CONSIDERED INCIDENTAL TO THE PROJECT.
5. ROCK BEDDING FOR DRAINAGE SHALL BE INSTALLED AT GATE VALVE, AS DIRECTED BY THE ENGINEER.

CITY OF NORTH BRANCH EST. 1881	CITY OF NORTH BRANCH VALVE BOX INSTALLATION NO SCALE	2025 - STANDARD DETAIL DETAIL NO. WM-003

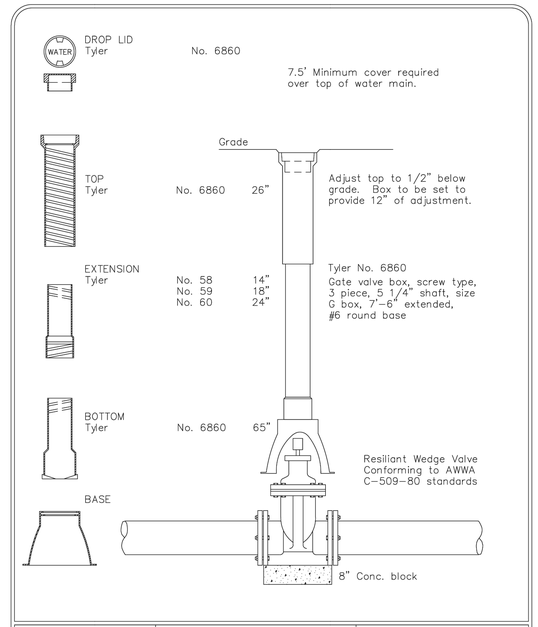

CITY OF NORTH BRANCH EST. 1881	CITY OF NORTH BRANCH BUTTERFLY VALVE INSTALLATION NO SCALE	2025 - STANDARD DETAIL DETAIL NO. WM - 004

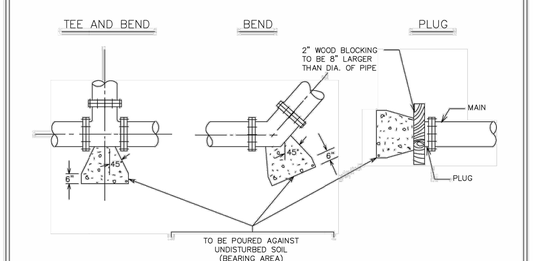

PIPE SIZE	BEARING AREA
6"	4.0 SQ. FT.
8"	6.0 "
10" – 12"	12.0 "
16"	20.0 "

NOTE:
1. RETAINER GLANDS/MEGA LUGS ARE TO BE USED AS SPECIFIED AT ALL CHANGES IN DIRECTION, FITTINGS, AND VALVES.
2. THRUST BLOCKING TO BE USED FOR BENDS 22-1/2" AND OVER.
3. THRUST BLOCKING SHALL ONLY BE USED WHERE WORKING PRESSURES ARE LESS THAN 150 PSI.
4. COVER FITTINGS WITH POLYETHYLENE (4 MIL) PRIOR TO POURING CONCRETE.
5. CONCRETE SHALL HAVE 2500 PSI, 28 DAY STRENGTH.

CITY OF NORTH BRANCH EST. 1881	CITY OF NORTH BRANCH THRUST BLOCKING NO SCALE	2025 - STANDARD DETAIL DETAIL NO. WM-005

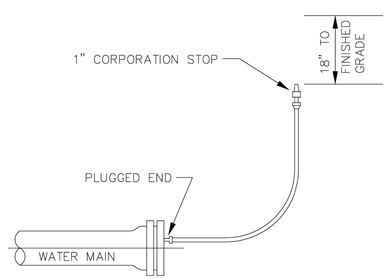

AFTER MEETING TEST REQUIREMENTS THE AIR BLEED LINE SHALL BE DISCONNECTED AT THE PLUG WITH NO ADDITIONAL COMPENSATION.

CITY OF NORTH BRANCH EST. 1881	CITY OF NORTH BRANCH AIR BLEED INSTALLATION DETAIL NO SCALE	2025 - STANDARD DETAIL DETAIL NO. WM - 007

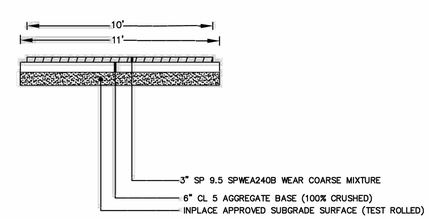

10' WIDE TRAIL TYPICAL SECTION

CITY OF NORTH BRANCH EST. 1881	CITY OF NORTH BRANCH TYPICAL BITUMINOUS TRAIL NO SCALE	2025 - STANDARD DETAIL DETAIL NO. RDW - 011

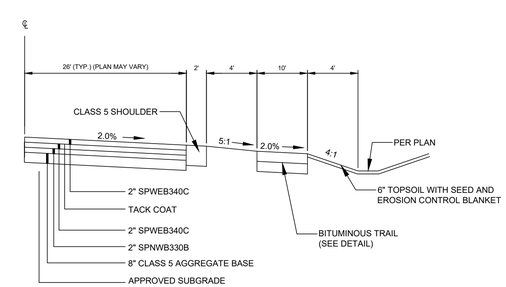

TYPICAL COUNTY ROAD TURN LANE & REPLACEMENT
N.T.S.

REV NO.	DATE	DESCRIPTION
1	04/01/2025	REVISION PER CITY REVIEW
2	04/24/2025	REVISION PER CITY REVIEW

DATE: 04/24/2025
DESIGN BY: M.J.M
DRAWN BY: M.J.M
CHECKED BY: C.J.D
DWG FILE: DETAILS
FILE NO.: 22-0030.00

I hereby certify that this plan, specification, or report was prepared by me or under my direct supervision and that I am a duly Licensed Professional Engineer under the laws of the State of Minnesota.

Signed: Christopher J. Dahn
Date: Lic. No. 58628

NOT FOR CONSTRUCTION

BOGART, PEDERSON & ASSOCIATES, INC.
LAND SURVEYING
CIVIL ENGINEERING
ENVIRONMENTAL SERVICES
13076 FIRST STREET, BECKER, MN 55308-9322
TEL: 763-262-9822 FAX: 763-262-9844

CEDAR RIDGE COMMUNITY LLC
CEDAR RIDGE COMMUNITY
City of North Branch, Chisago County, MN

DETAILS

SHEET NO.
C9.4

N:\Projects Current\22-0030.02 Belden North Branch Plat\Civil\CAD Files\NB Cover\SWPPP.dwg
4/24/2025 3:14 PM

CONCRETE FOUNDATION PREPARATION (OR EQUAL)

vital™ cluster box unit - 1570 "F" Series

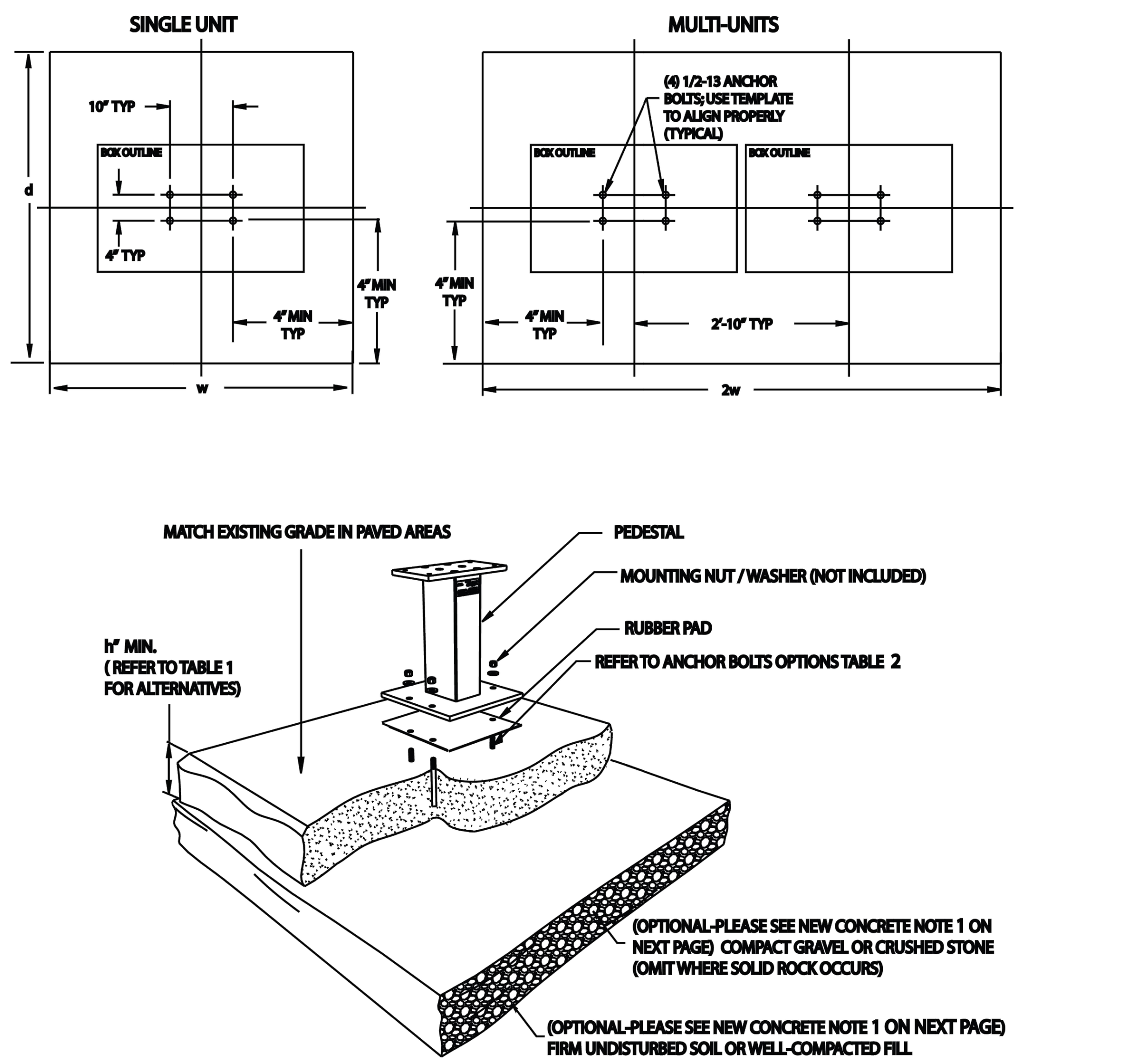

MAILBOX FOUNDATION
N.T.S.

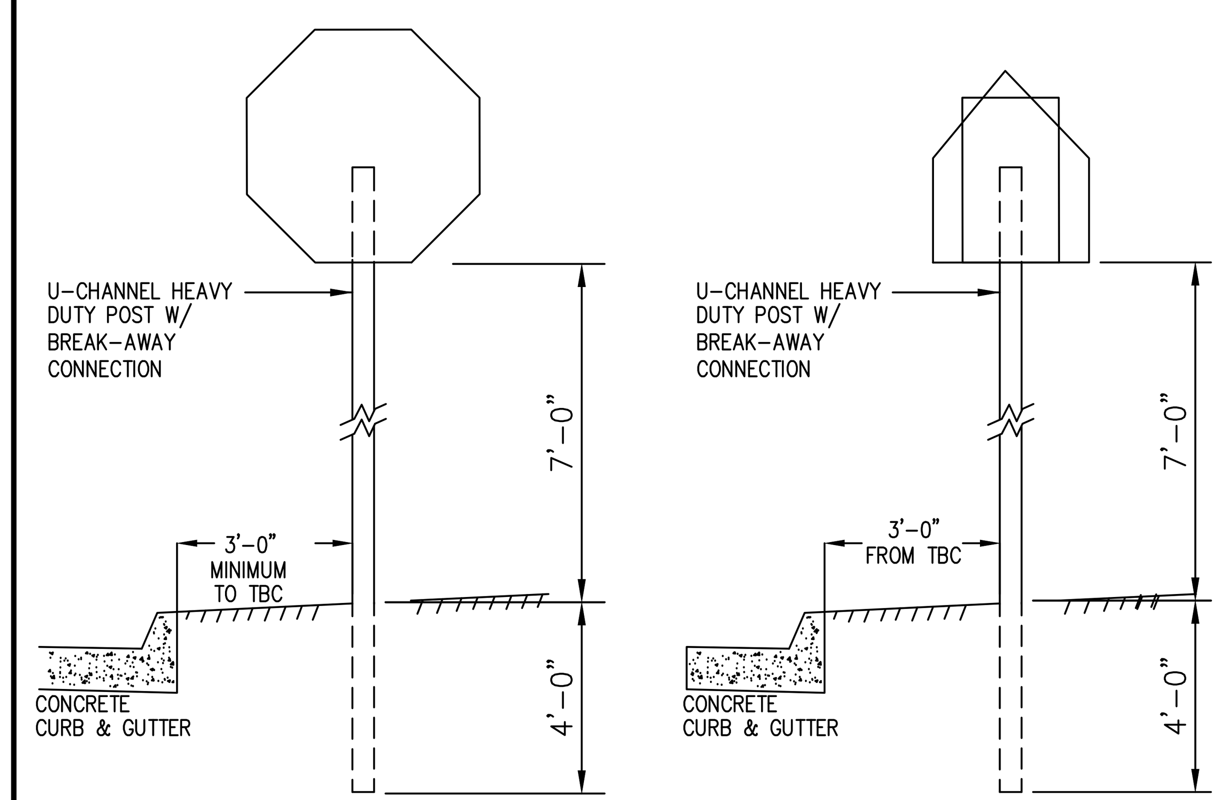

TRAFFIC SIGNS
N.T.S.

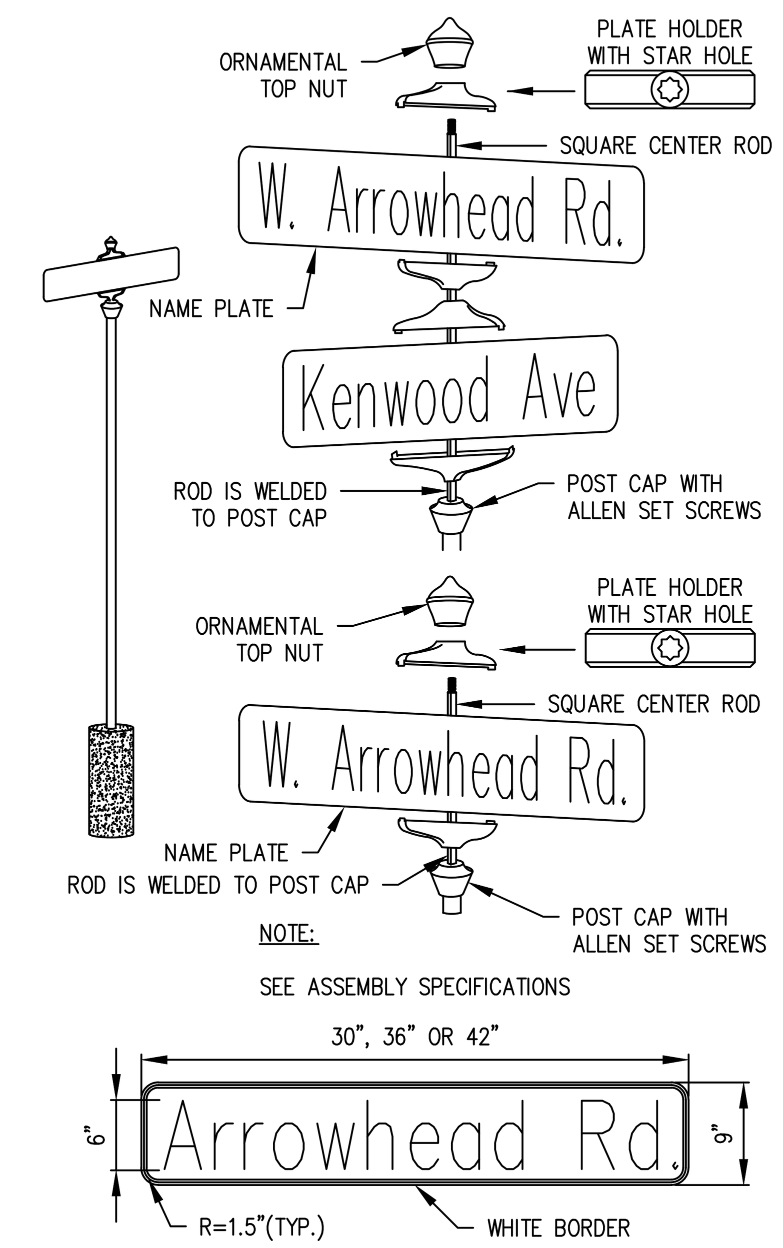

NOTE:

SEE ASSEMBLY SPECIFICATIONS

NOTES:

LETTERS & NUMBERS SHALL BE SERIES 'C' 6" UPPER & LOWER CASE.

WHITE BORDER SHALL BE 3/8".

LEGEND

(thick line)	WHITE
(box)	GREEN

TRAFFIC SIGNS
N.T.S.

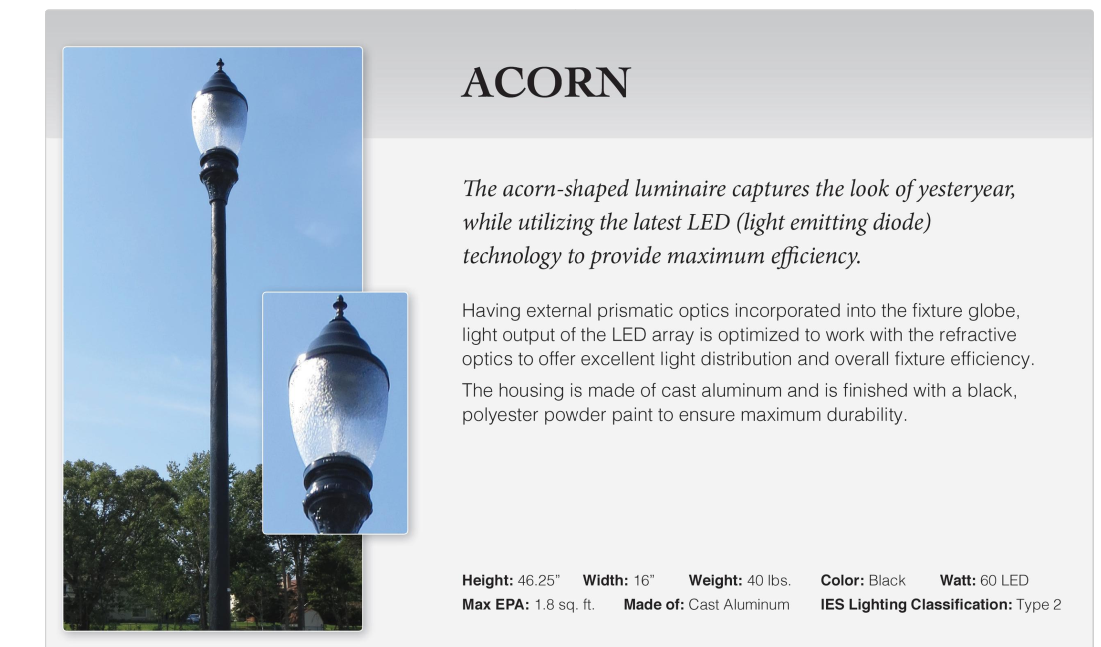

STREET LIGHTING
N.T.S.

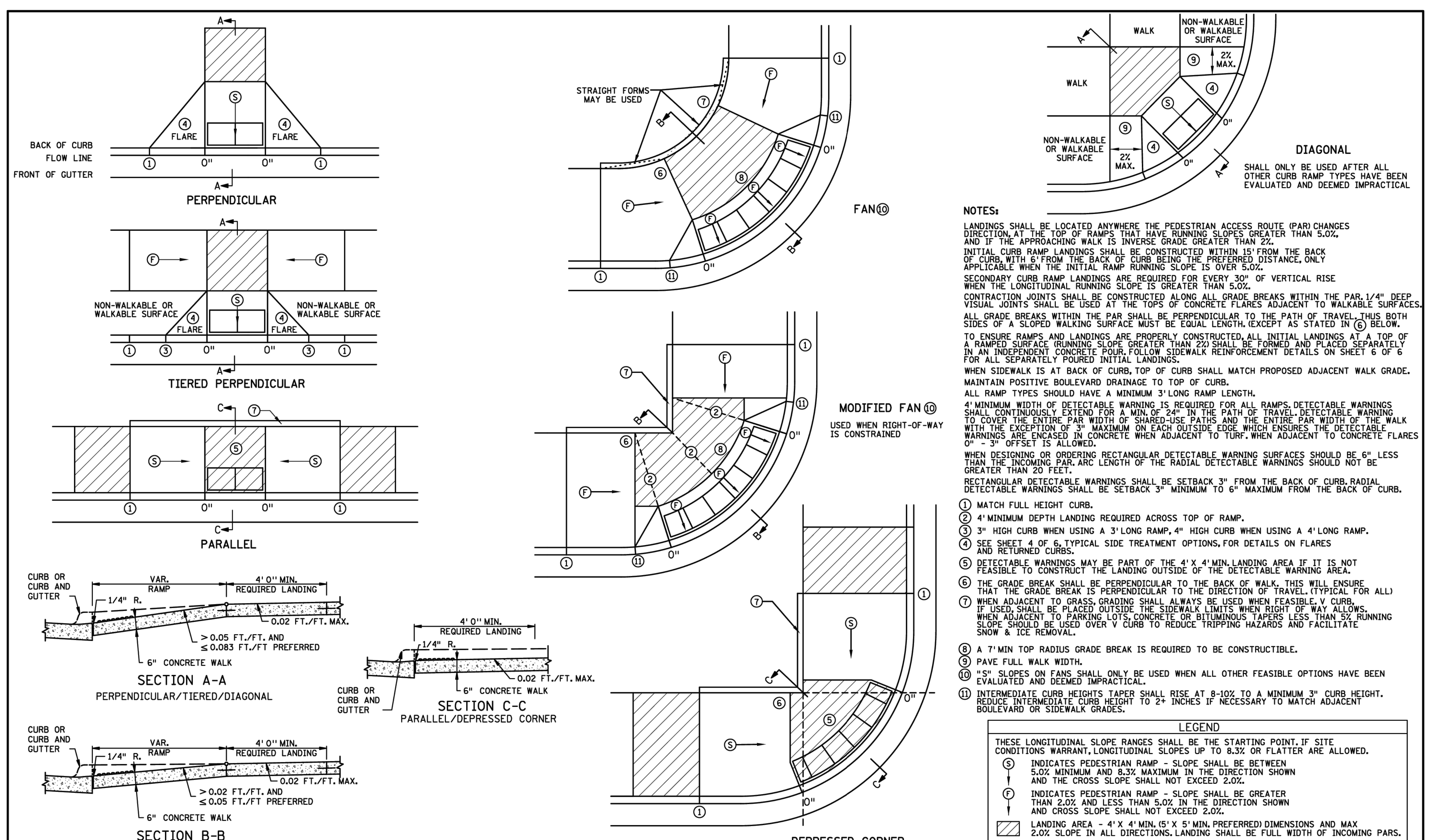

NOTES:

LANDINGS SHALL BE LOCATED ANYWHERE THE PEDESTRIAN ACCESS ROUTE (PAR) CHANGES DIRECTION, AT THE TOP OF RAMPS THAT HAVE RUNNING SLOPES GREATER THAN 5.0%, AND IF THE APPROACHING WALK IS INVERSE GRADE GREATER THAN 2%.

INITIAL CURB RAMP LANDINGS SHALL BE CONSTRUCTED WITHIN 15' FROM THE BACK OF CURB, WITH 6' FROM THE BACK OF CURB BEING THE PREFERRED DISTANCE, ONLY APPLICABLE WHEN THE INITIAL RAMP RUNNING SLOPE IS OVER 5.0%.

SECONDARY CURB RAMP LANDINGS ARE REQUIRED FOR EVERY 30" OF VERTICAL RISE WHEN THE LONGITUDINAL RUNNING SLOPE IS GREATER THAN 5.0%.

CONTRACTION JOINTS SHALL BE CONSTRUCTED ALONG ALL GRADE BREAKS WITHIN THE PAR. 1/4" DEEP VISUAL JOINTS SHALL BE USED AT THE TOPS OF CONCRETE FLARES ADJACENT TO WALKABLE SURFACES.

ALL GRADE BREAKS WITHIN THE PAR SHALL BE PERPENDICULAR TO THE PATH OF TRAVEL. THUS BOTH SIDES OF A SLOPED WALKING SURFACE MUST BE EQUAL LENGTH. (EXCEPT AS STATED IN ⑥ BELOW.

TO ENSURE RAMPS AND LANDINGS ARE PROPERLY CONSTRUCTED, ALL INITIAL LANDINGS AT A TOP OF A RAMPED SURFACE (RUNNING SLOPE GREATER THAN 2%) SHALL BE FORMED AND PLACED SEPARATELY IN AN INDEPENDENT CONCRETE POUR. FOLLOW SIDEWALK REINFORCEMENT DETAILS ON SHEET 6 OF 6 FOR ALL SEPARATELY POURED INITIAL LANDINGS.

WHEN SIDEWALK IS AT BACK OF CURB, TOP OF CURB SHALL MATCH PROPOSED ADJACENT WALK GRADE.

MAINTAIN POSITIVE BOULEVARD DRAINAGE TO TOP OF CURB.

ALL RAMP TYPES SHOULD HAVE A MINIMUM 3' LONG RAMP LENGTH.

4' MINIMUM WIDTH OF DETECTABLE WARNING IS REQUIRED FOR ALL RAMPS. DETECTABLE WARNINGS SHALL CONTINUOUSLY EXTEND FOR A MIN. OF 24" IN THE PATH OF TRAVEL. DETECTABLE WARNING TO COVER THE ENTIRE PAR WIDTH OF SHARED-USE PATHS AND THE ENTIRE PAR WIDTH OF THE WALK WITH THE EXCEPTION OF 3" MAXIMUM ON EACH OUTSIDE EDGE WHICH ENSURES THE DETECTABLE WARNINGS ARE ENCASED IN CONCRETE WHEN ADJACENT TO TURF. WHEN ADJACENT TO CONCRETE FLARES 0" - 3" OFFSET IS ALLOWED.

WHEN DESIGNING OR ORDERING RECTANGULAR DETECTABLE WARNING SURFACES SHOULD BE 6" LESS THAN THE INCOMING PAR. ARC LENGTH OF THE RADIAL DETECTABLE WARNINGS SHOULD NOT BE GREATER THAN 20 FEET.

RECTANGULAR DETECTABLE WARNINGS SHALL BE SETBACK 3" FROM THE BACK OF CURB. RADIAL DETECTABLE WARNINGS SHALL BE SETBACK 3" MINIMUM TO 6" MAXIMUM FROM THE BACK OF CURB.

① MATCH FULL HEIGHT CURB.
② 4' MINIMUM DEPTH LANDING REQUIRED ACROSS TOP OF RAMP.
③ 3" HIGH CURB WHEN USING A 3' LONG RAMP, 4" HIGH CURB WHEN USING A 4' LONG RAMP.
④ SEE SHEET 4 OF 6, TYPICAL SIDE TREATMENT OPTIONS, FOR DETAILS ON FLARES AND RETURNED CURBS.
⑤ DETECTABLE WARNINGS MAY BE PART OF THE 4' X 4' MIN. LANDING AREA IF IT IS NOT FEASIBLE TO CONSTRUCT THE LANDING OUTSIDE OF THE DETECTABLE WARNING AREA.
⑥ THE GRADE BREAK SHALL BE PERPENDICULAR TO THE BACK OF WALK. THIS WILL ENSURE THAT THE GRADE BREAK IS PERPENDICULAR TO THE DIRECTION OF TRAVEL. (TYPICAL FOR ALL)
⑦ WHEN ADJACENT TO GRASS, GRADING SHALL ALWAYS BE USED WHEN FEASIBLE. V CURB, IF USED, SHALL BE PLACED OUTSIDE THE SIDEWALK LIMITS WHEN RIGHT OF WAY ALLOWS. WHEN ADJACENT TO PARKING LOTS, CONCRETE OR BITUMINOUS TAPERS LESS THAN 5% RUNNING SLOPE SHOULD BE USED OVER V CURB TO REDUCE TRIPPING HAZARDS AND FACILITATE SNOW & ICE REMOVAL.
⑧ A 7' MIN TOP RADIUS GRADE BREAK IS REQUIRED TO BE CONSTRUCTIBLE.
⑨ PAVE FULL WALK WIDTH.
⑩ "S" SLOPES ON FANS SHALL ONLY BE USED WHEN ALL OTHER FEASIBLE OPTIONS HAVE BEEN EVALUATED AND DEEMED IMPRACTICAL.
⑪ INTERMEDIATE CURB HEIGHTS TAPER SHALL RISE AT 8-10% TO A MINIMUM 3" CURB HEIGHT. REDUCE INTERMEDIATE CURB HEIGHT TO 2+ INCHES IF NECESSARY TO MATCH ADJACENT BOULEVARD OR SIDEWALK GRADES.

LEGEND

THESE LONGITUDINAL SLOPE RANGES SHALL BE THE STARTING POINT. IF SITE CONDITIONS WARRANT, LONGITUDINAL SLOPES UP TO 8.3% OR FLATTER ARE ALLOWED.

Ⓢ	INDICATES PEDESTRIAN RAMP - SLOPE SHALL BE BETWEEN 5.0% MINIMUM AND 8.3% MAXIMUM IN THE DIRECTION SHOWN AND THE CROSS SLOPE SHALL NOT EXCEED 2.0%.
Ⓕ	INDICATES PEDESTRIAN RAMP - SLOPE SHALL BE GREATER THAN 2.0% AND LESS THAN 5.0% IN THE DIRECTION SHOWN AND CROSS SLOPE SHALL NOT EXCEED 2.0%.
(hatched)	LANDING AREA - 4' X 4' MIN. (5' X 5' MIN. PREFERRED) DIMENSIONS AND MAX 2.0% SLOPE IN ALL DIRECTIONS. LANDING SHALL BE FULL WIDTH OF INCOMING PARS.
X"	CURB HEIGHT

REVISION:
APPROVED: 11-04-2021
JEFFREY PERKINS
OPERATIONS DIVISION

MINNESOTA DEPARTMENT OF TRANSPORTATION
STANDARD PLAN 5-297.250 | 1 OF 6
THOMAS STYRBICKI, STATE DESIGN ENGINEER
APPROVED: 11-04-2021
REVISED:
PEDESTRIAN CURB RAMP DETAILS
STATE PROJ. NO. (TH) SHEET NO. OF SHEETS

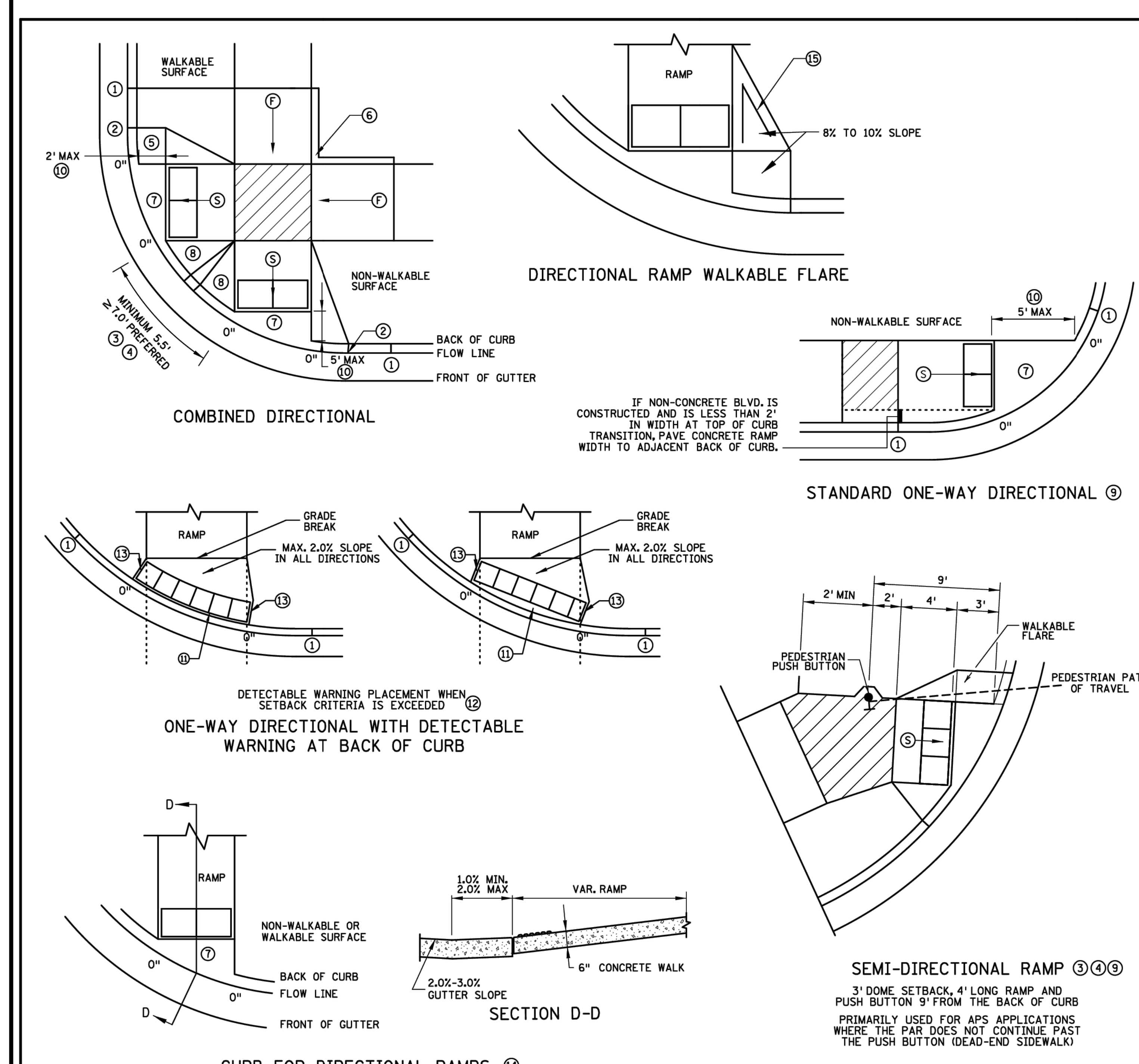

NOTES:

LANDINGS SHALL BE LOCATED ANYWHERE THE PEDESTRIAN ACCESS ROUTE (PAR) CHANGES DIRECTION, AT THE TOP OF RAMPS THAT HAVE RUNNING SLOPES GREATER THAN 5.0%, AND IF THE APPROACHING WALK IS INVERSE GRADE.

INITIAL CURB RAMP LANDINGS SHALL BE CONSTRUCTED WITHIN 15' FROM THE BACK OF CURB, WITH 6' FROM THE BACK OF CURB BEING THE PREFERRED DISTANCE, ONLY APPLICABLE WHEN THE INITIAL RAMP RUNNING SLOPE IS OVER 5.0%.

SECONDARY CURB RAMP LANDINGS ARE REQUIRED FOR EVERY 30" OF VERTICAL RISE WHEN THE LONGITUDINAL SLOPE IS GREATER THAN 5.0%.

CONTRACTION JOINTS SHALL BE CONSTRUCTED ALONG ALL GRADE BREAKS WITHIN THE PAR. 1/4" DEEP VISUAL JOINTS SHALL BE USED AT THE TOP GRADE BREAK OF CONCRETE FLARES ADJACENT TO WALKABLE SURFACES.

ALL GRADE BREAKS WITHIN THE PAR SHALL BE PERPENDICULAR TO THE PATH OF TRAVEL. THUS BOTH SIDES OF A SLOPED WALKING SURFACE MUST BE EQUAL LENGTH.

TO ENSURE INITIAL RAMPS AND INITIAL LANDINGS ARE PROPERLY CONSTRUCTED, LANDINGS SHALL BE CAST SEPARATELY. FOLLOW SIDEWALK REINFORCEMENT DETAILS ON SHEET 6 AND THE ADA SPECIAL PROVISION (PROSECUTION OF WORK).

TOP OF CURB SHALL MATCH PROPOSED ADJACENT WALK GRADE.

WHEN THE BOULEVARD IS 4' WIDE OR LESS, THE TOP OF CURB TAPER SHALL MATCH THE RAMP SLOPES TO REDUCE NEGATIVE BOULEVARD SLOPES FROM THE TOP BACK OF CURB TO THE PAR.

ALL RAMP TYPES SHOULD HAVE A MINIMUM 3' LONG RAMP LENGTH.

4' MINIMUM WIDTH OF DETECTABLE WARNING IS REQUIRED FOR ALL RAMPS. DETECTABLE WARNINGS SHALL CONTINUOUSLY EXTEND FOR A MIN. OF 24" IN THE PATH OF TRAVEL. DETECTABLE WARNING TO COVER THE ENTIRE PAR WIDTH OF SHARED-USE PATHS AND THE ENTIRE PAR WIDTH OF THE WALK WITH THE EXCEPTION OF 3" MAXIMUM ON EACH OUTSIDE EDGE WHICH ENSURES THE DETECTABLE WARNINGS ARE ENCASED IN CONCRETE WHEN ADJACENT TO TURF. WHEN ADJACENT TO CONCRETE FLARES 0" - 3" OFFSET IS ALLOWED.

WHEN DESIGNING OR ORDERING RECTANGULAR DETECTABLE WARNING SURFACES SHOULD BE 6" LESS THAN THE INCOMING PAR. ARC LENGTH OF THE RADIAL DETECTABLE WARNINGS SHOULD NOT BE GREATER THAN 20 FEET.

RADIAL DETECTABLE WARNINGS SHALL BE SETBACK 3" MINIMUM TO 6" MAXIMUM FROM THE BACK OF CURB. SEE NOTES ⑩ & ⑪ FOR INFORMATION REGARDING RECTANGULAR DETECTABLE WARNING PLACEMENT.

① MATCH FULL CURB HEIGHT.
② 3" HIGH CURB WHEN USING A 3' LONG RAMP
4" HIGH CURB WHEN USING A 4' LONG RAMP.
③ 3" MINIMUM CURB HEIGHT (5.5' MIN. DISTANCE REQUIRED BETWEEN DOMES)
4" PREFERRED (7' MIN. DISTANCE REQUIRED BETWEEN DOMES).
④ THE "BUMP" IN BETWEEN THE RAMPS SHOULD NOT BE IN THE PATH OF TRAVEL FOR COMBINED DIRECTIONAL RAMPS. IF THIS OCCURS MODIFY THE RAMP LOCATION OR SWITCH RAMP TO A FAN/DEPRESSED CORNER.
⑤ WHEN USING CONCRETE PAVED FLARES ON THE OUTSIDE OF DIRECTIONAL RAMPS, AND ADJACENT TO A WALKABLE SURFACE, DIRECTIONAL RAMP FLARES SHALL BE USED. SEE THE DETAIL ON THIS SHEET.
⑥ GRADING SHALL ALWAYS BE USED WHEN FEASIBLE. V CURB, IF USED, SHALL BE PLACED OUTSIDE THE SIDEWALK LIMITS WHEN RIGHT OF WAY ALLOWS. WHEN ADJACENT TO PARKING LOTS, CONCRETE OR BITUMINOUS TAPERS SHOULD BE USED OVER V CURB TO REDUCE TRIPPING HAZARDS AND FACILITATE SNOW & ICE REMOVAL.
⑦ MAX. 2.0% SLOPE IN ALL DIRECTIONS IN FRONT OF GRADE BREAK AND DRAIN TO FLOW LINE. SHALL BE CONSTRUCTED INTEGRAL WITH CURB AND GUTTER.
⑧ 8% TO 10% WALKABLE FLARE.
⑨ PLACE DOMES AT THE BACK OF CURB WHEN ALLOWABLE SETBACK CRITERIA IS EXCEEDED.
⑩ FRONT EDGE OF DETECTABLE WARNING SHALL BE SET BACK 2' MAXIMUM WHEN ADJACENT TO WALKABLE SURFACE, AND 5' MAXIMUM WHEN ADJACENT TO NON-WALKABLE SURFACE WITH ONE CORNER SET 3" FROM BACK OF CURB. A WALKABLE SURFACE IS DEFINED AS A PAVED SURFACE ADJACENT TO A CURB RAMP WITHOUT RAISED OBSTACLES THAT COULD MISTAKENLY BE TRAVERSED BY A USER WHO IS VISUALLY IMPAIRED.
⑪ RECTANGULAR DETECTABLE WARNINGS MAY BE SETBACK UP TO 9" FROM THE BACK OF CURB WITH CORNERS SET 3" FROM BACK OF CURB. IF 9" SETBACK IS EXCEEDED USE RADIAL DETECTABLE WARNINGS.
⑫ FOR DIRECTIONAL RAMPS WITH THE DETECTABLE WARNINGS PLACED AT THE BACK OF CURB, THE DETECTABLE WARNINGS SHALL COVER THE ENTIRE WIDTH OF THE WALK/PATH. THIS ENSURES A DETECTABLE EDGE AND HELPS ELIMINATE THE CURB TAPER OBSTRUCTING THE PATH OF PEDESTRIAN TRAVEL.
⑬ THE CONCRETE WALK SHALL BE FORMED AND CONSTRUCTED PERPENDICULAR TO THE BACK OF CURB. MAINTAIN 3" BETWEEN EDGE OF DOMES AND EDGE OF CONCRETE.
⑭ TO BE USED FOR ALL DIRECTIONAL RAMPS, EXCEPT WHERE DOMES ARE PLACED ALONG THE BACK OF CURB.
⑮ PLACE 2 NO. 4 BARS 4 INCHES FROM SIDE OF FORMS WITH A MINIMUM 2 INCHES OF CONCRETE COVER ALONG EACH SIDE OF FLARE (INCIDENTAL).

LEGEND

THESE LONGITUDINAL SLOPE RANGES SHALL BE THE STARTING POINT. IF SITE CONDITIONS WARRANT, LONGITUDINAL SLOPES UP TO 8.3% OR FLATTER ARE ALLOWED.

Ⓢ	INDICATES PEDESTRIAN RAMP - SLOPE SHALL BE BETWEEN 5.0% MINIMUM AND 8.3% MAXIMUM IN THE DIRECTION SHOWN AND THE CROSS SLOPE SHALL NOT EXCEED 2.0%.
Ⓕ	INDICATES PEDESTRIAN RAMP - SLOPE SHALL BE GREATER THAN 2.0% AND LESS THAN 5.0% IN THE DIRECTION SHOWN AND CROSS SLOPE SHALL NOT EXCEED 2.0%.
(hatched)	LANDING AREA - 4' X 4' MIN. (5' X 5' MIN. PREFERRED) DIMENSIONS AND MAX 2.0% SLOPE IN ALL DIRECTIONS. LANDING SHALL BE FULL WIDTH OF INCOMING PARS.
X"	CURB HEIGHT

REVISION:
APPROVED: 11-04-2021
JEFFREY PERKINS
OPERATIONS DIVISION

MINNESOTA DEPARTMENT OF TRANSPORTATION
STANDARD PLAN 5-297.250 | 2 OF 6
THOMAS STYRBICKI, STATE DESIGN ENGINEER
APPROVED: 11-04-2021
REVISED:
PEDESTRIAN CURB RAMP DETAILS
STATE PROJ. NO. (T.H.) SHEET NO. OF SHEETS

REV NO.	DATE	DESCRIPTION
1	04/01/2025	REVISION PER CITY REVIEW
2	04/24/2025	REVISION PER CITY REVIEW

DATE: 04/24/2025
DESIGN BY: MJM
DRAWN BY: MJM
CHECKED BY: CJD
DWG FILE: DETAILS
FILE NO.: 22-0030.00

I hereby certify that this plan, specification, or report was prepared by me or under my direct supervision and that I am a duly Licensed Professional Engineer under the laws of the State of Minnesota.

NOT FOR CONSTRUCTION

Signed: Christopher J. Dahn
Date: Lic. No. 58628

BOGART, PEDERSON & ASSOCIATES, INC.
LAND SURVEYING
CIVIL ENGINEERING
ENVIRONMENTAL SERVICES
13076 FIRST STREET, BECKER, MN 55308-9322
TEL: 763-262-8822 FAX: 763-262-8844

CEDAR RIDGE COMMUNITY LLC
CEDAR RIDGE COMMUNITY
City of North Branch, Chisago County, MN

DETAILS

SHEET NO.
C9.5

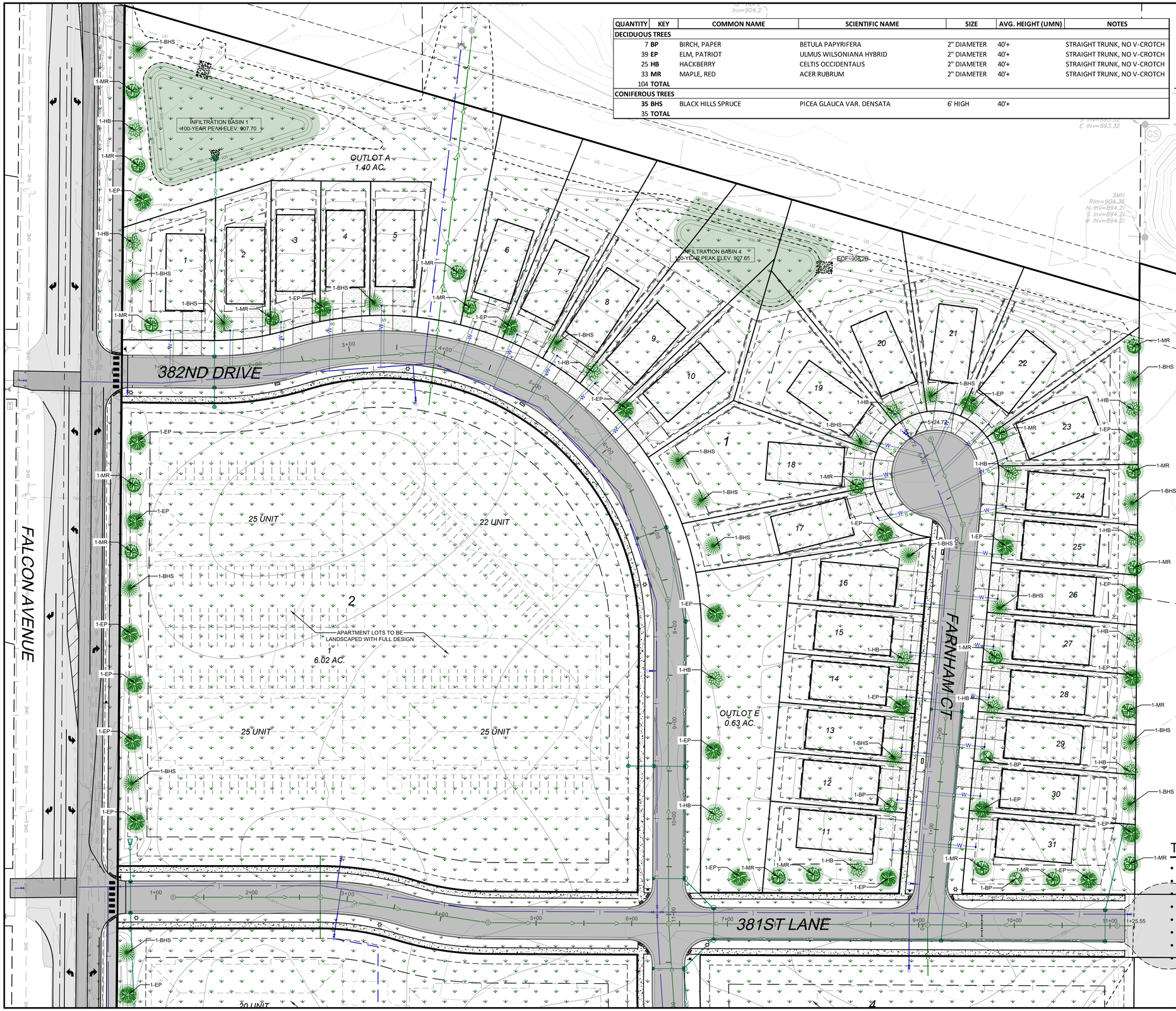

QUANTITY	KEY	COMMON NAME	SCIENTIFIC NAME	SIZE	AVG. HEIGHT (UMN)	NOTES
DECIDUOUS TREES						
7	**BP**	BIRCH, PAPER	BETULA PAPYRIFERA	2" DIAMETER	40'+	STRAIGHT TRUNK, NO V-CROTCH
39	**EP**	ELM, PATRIOT	ULMUS WILSONIANA HYBRID	2" DIAMETER	40'+	STRAIGHT TRUNK, NO V-CROTCH
25	**HB**	HACKBERRY	CELTIS OCCIDENTALIS	2" DIAMETER	40'+	STRAIGHT TRUNK, NO V-CROTCH
33	**MR**	MAPLE, RED	ACER RUBRUM	2" DIAMETER	40'+	STRAIGHT TRUNK, NO V-CROTCH
104	**TOTAL**					
CONIFEROUS TREES						
35	**BHS**	BLACK HILLS SPRUCE	PICEA GLAUCA VAR. DENSATA	6' HIGH	40'+	
35	**TOTAL**					

0' 50' 100'
SCALE: 1"=50'

LEGEND:

- PROPOSED BITUMINOUS PAVEMENT
- PROPOSED CONCRETE SIDEWALK
- PROPOSED TURF ESTABLISHMENT
- PROPOSED INFILTRATION SEED EST.
- PROPOSED DECIDUOUS TREE
- PROPOSED CONIFEROUS TREE
- PROPOSED SHRUB

LANDSCAPE REQUIREMENTS:

PER CITY OF NORTH BRANCH ZONING ORDINANCE:
ALL LANDSCAPING INCORPORATED IN SAID PLAN SHALL CONFORM TO THE FOLLOWING STANDARDS AND CRITERIA:

A. ALL PLANTS MUST AT LEAST EQUAL THE FOLLOWING MINIMUM SIZE:

	POTTED/BARE ROOT OR BALLED & BURLAPPED
SHADE TREES	2-INCH DIAMETER
HALF TREES	1-1/2 INCH DIAMETER
EVERGREEN	6 FEET HIGH
TALL SHRUBS & HEDGE MAT.	6 FEET HIGH
LOW SHRUBS - DECIDUOUS	24 - 30 INCHES
-EVERGREEN	24 - 30 INCHES
-SPREADING EVERGREENS	18 - 24 INCHES

B. LANDSCAPE GUARANTEE: ALL NEW PLANTS SHALL BE GUARANTEED FOR TWO (2) FULL YEARS FROM THE TIME PLANTING HAS BEEN COMPLETED. ALL PLANTS SHALL BE ALIVE AND IN SATISFACTORY GROWTH AT THE END OF THE GUARANTEE PERIOD OR BE REPLACED.

(SEE CITY ORDINANCE FOR FULL REQUIREMENTS)

LANDSCAPE NOTES:

1. ALL AREAS DISTURBED DURING CONSTRUCTION SHALL BE RESTORED AND VEGETATED AS SOON AS POSSIBLE. ANY FINISHED AREAS SHALL BE SEEDED AND MULCHED WITHIN 7 DAYS AFTER FINISHED GRADING IS COMPLETED IN ACCORDANCE TO MN/DOT 2575.
2. PLANTING SOIL SHALL CONSIST 1:1:1 CONSISTING OF 33% SELECT LOAMY TOPSOIL, 33% PEAT MOSS, 33% PIT RUN SAND.
3. ALL DISTURBED AREAS SHALL BE REVEGETATED WITH MN/DOT SEED MIX, MULCHED, & DISK ANCHORED, PER THE FOLLOWING SCHEDULE:

SEED MIX 25-131: 220 LB/AC.
INFILTRATION BASIN SEED MIX 33-261: 35 LB/AC.
MULCH TYPE 3: 2 TONS/AC.

TREE PRESERVATION NOTES:

- TREE REMOVAL AREA: 4.17 ACRES
- TREE PRESERVATION AREA: 0.04 ACRES
- TREE PRESERVATION %: 1%
- 50% OF TREE REMOVAL AREA: 2.08 ACRES
- ASSUMPTIONS FOR REPLACEMENT: 500 S.F. OF COVERAGE PER TREE
- 2.08 ACRES / 500 S.F. 182 TREES TO BE REPLACED
- TREES PROPOSED: 139
- MISSING TREES TO BE PAID: 43

REV NO.	DATE	DESCRIPTION
1	04/01/2025	REVISION PER CITY REVIEW
2	04/24/2025	REVISION PER CITY REVIEW

DATE: 04/24/2025
DESIGN BY: MJM
DRAWN BY: MJM
CHECKED BY: CJD
DWG FILE: EROSION
FILE NO.: 22-0030.00

I hereby certify that this plan, specification, or report was prepared by me or under my direct supervision and that I am a duly Licensed Professional Engineer under the laws of the State of Minnesota.

Signed: Christopher J. Dahn
Date: Lic. No. 58628

NOT FOR CONSTRUCTION

BOGART, PEDERSON & ASSOCIATES, INC.
LAND SURVEYING
CIVIL ENGINEERING
ENVIRONMENTAL SERVICES
13079 FIRST STREET, BECKER, MN 55308-9322
TEL: 763-262-3822 FAX: 763-262-3844

CEDAR RIDGE COMMUNITY LLC
CEDAR RIDGE COMMUNITY
City of North Branch, Chisago County, MN

NORTH LANDSCAPE PLAN

SHEET NO.
C10.1

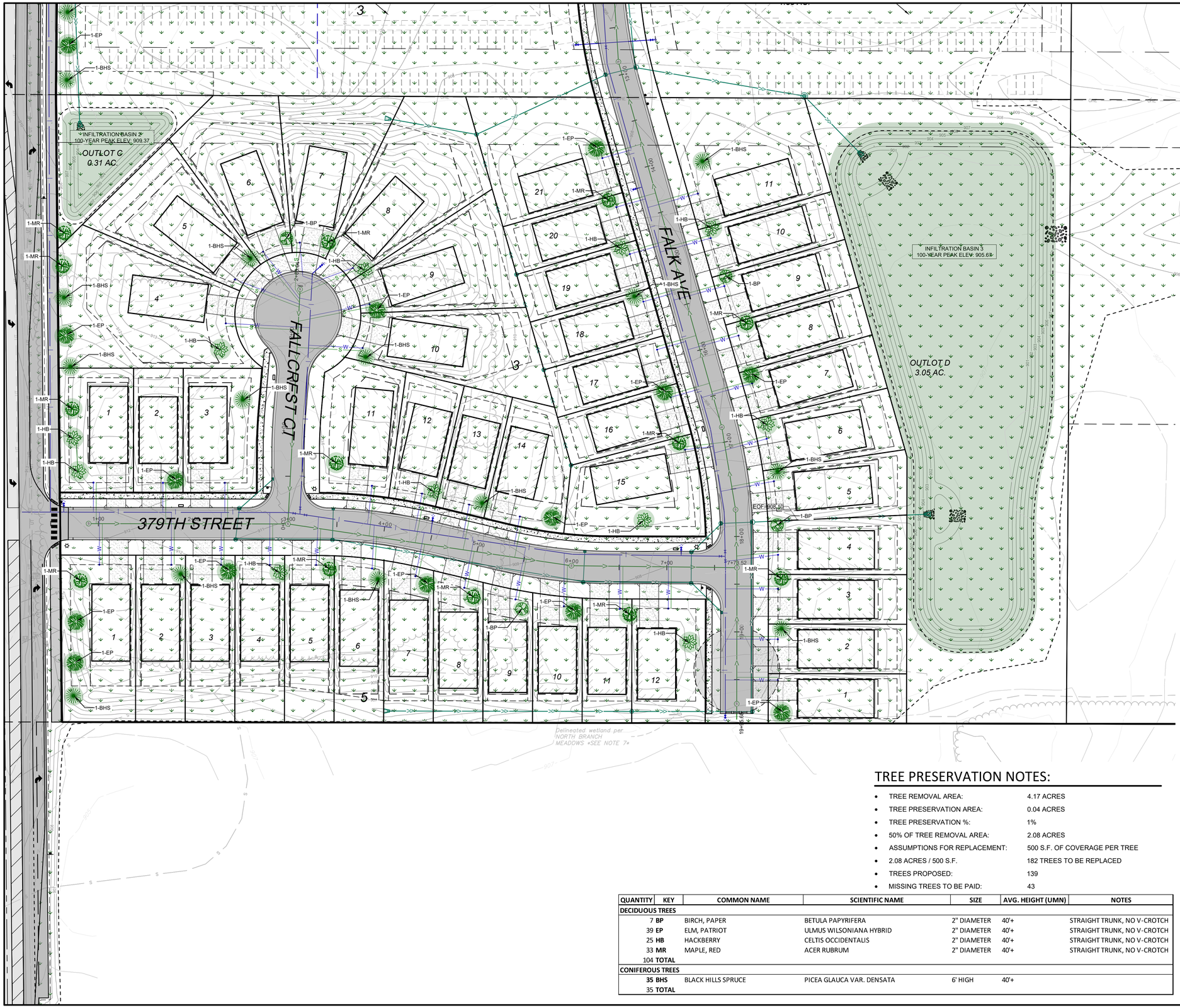

LEGEND:

- PROPOSED BITUMINOUS PAVEMENT
- PROPOSED CONCRETE SIDEWALK
- PROPOSED TURF ESTABLISHMENT
- PROPOSED INFILTRATION SEED EST.
- PROPOSED DECIDUOUS TREE
- PROPOSED CONIFEROUS TREE
- PROPOSED SHRUB

LANDSCAPE REQUIREMENTS:

PER CITY OF NORTH BRANCH ZONING ORDINANCE:
ALL LANDSCAPING INCORPORATED IN SAID PLAN SHALL CONFORM TO THE FOLLOWING STANDARDS AND CRITERIA:

A. ALL PLANTS MUST AT LEAST EQUAL THE FOLLOWING MINIMUM SIZE:

	POTTED/BARE ROOT OR BALLED & BURLAPPED
SHADE TREES	2-INCH DIAMETER
HALF TREES	1-1/2 INCH DIAMETER
EVERGREEN	6 FEET HIGH
TALL SHRUBS & HEDGE MAT.	6 FEET HIGH
LOW SHRUBS - DECIDUOUS	24 - 30 INCHES
-EVERGREEN	24 - 30 INCHES
-SPREADING EVERGREENS	18 - 24 INCHES

B. LANDSCAPE GUARANTEE: ALL NEW PLANTS SHALL BE GUARANTEED FOR TWO (2) FULL YEARS FROM THE TIME PLANTING HAS BEEN COMPLETED. ALL PLANTS SHALL BE ALIVE AND IN SATISFACTORY GROWTH AT THE END OF THE GUARANTEE PERIOD OR BE REPLACED.

(SEE CITY ORDINANCE FOR FULL REQUIREMENTS)

TREE PRESERVATION NOTES:

- TREE REMOVAL AREA: 4.17 ACRES
- TREE PRESERVATION AREA: 0.04 ACRES
- TREE PRESERVATION %: 1%
- 50% OF TREE REMOVAL AREA: 2.08 ACRES
- ASSUMPTIONS FOR REPLACEMENT: 500 S.F. OF COVERAGE PER TREE
- 2.08 ACRES / 500 S.F. 182 TREES TO BE REPLACED
- TREES PROPOSED: 139
- MISSING TREES TO BE PAID: 43

QUANTITY	KEY	COMMON NAME	SCIENTIFIC NAME	SIZE	AVG. HEIGHT (UMN)	NOTES
DECIDUOUS TREES						
7	**BP**	BIRCH, PAPER	BETULA PAPYRIFERA	2" DIAMETER	40'+	STRAIGHT TRUNK, NO V-CROTCH
39	**EP**	ELM, PATRIOT	ULMUS WILSONIANA HYBRID	2" DIAMETER	40'+	STRAIGHT TRUNK, NO V-CROTCH
25	**HB**	HACKBERRY	CELTIS OCCIDENTALIS	2" DIAMETER	40'+	STRAIGHT TRUNK, NO V-CROTCH
33	**MR**	MAPLE, RED	ACER RUBRUM	2" DIAMETER	40'+	STRAIGHT TRUNK, NO V-CROTCH
104	**TOTAL**					
CONIFEROUS TREES						
35	**BHS**	BLACK HILLS SPRUCE	PICEA GLAUCA VAR. DENSATA	6' HIGH	40'+	
35	**TOTAL**					

LANDSCAPE NOTES:

1. ALL AREAS DISTURBED DURING CONSTRUCTION SHALL BE RESTORED AND VEGETATED AS SOON AS POSSIBLE. ANY FINISHED AREAS SHALL BE SEEDED AND MULCHED WITHIN 7 DAYS AFTER FINISHED GRADING IS COMPLETED IN ACCORDANCE TO MN/DOT 2575.
2. PLANTING SOIL SHALL CONSIST 1:1:1 CONSISTING OF 33% SELECT LOAMY TOPSOIL, 33% PEAT MOSS, 33% PIT RUN SAND.
3. ALL DISTURBED AREAS SHALL BE REVEGETATED WITH MN/DOT SEED MIX, MULCHED, & DISK ANCHORED, PER THE FOLLOWING SCHEDULE:

SEED MIX 25-131: 220 LB/AC.
INFILTRATION BASIN SEED MIX 33-261: 35 LB/AC.
MULCH TYPE 3: 2 TONS/AC.

REV NO.	DATE	DESCRIPTION
1	04/01/2025	REVISION PER CITY REVIEW
2	04/24/2025	REVISION PER CITY REVIEW

DATE: 04/24/2025
DESIGN BY: MJM
DRAWN BY: MJM
CHECKED BY: CJD
DWG FILE: EROSION
FILE NO.: 22-0030.00

I hereby certify that this plan, specification, or report was prepared by me or under my direct supervision and that I am a duly Licensed Professional Engineer under the laws of the State of Minnesota.

NOT FOR CONSTRUCTION

Signed: Christopher J. Dahn
Date: Lic. No. 58628

BOGART, PEDERSON & ASSOCIATES, INC.
LAND SURVEYING
CIVIL ENGINEERING
ENVIRONMENTAL SERVICES
13079 FIRST STREET, BECKER, MN 55308-9322
TEL: 763-262-9622 FAX: 763-262-9644

CEDAR RIDGE COMMUNITY LLC
CEDAR RIDGE COMMUNITY
City of North Branch, Chisago County, MN

SOUTH LANDSCAPE PLAN

SHEET NO.
C10.2

City of North Branch
Staff Report

Prepared By: Nathan Sondrol, Community Development Director

Presenter: Nathan Sondrol, Community Development Director

Date: 05/07/2025

Board & Commission: Planning Commission

Subject: Consider Resolution R-190-2025 for the Cedar Ridge Community Preliminary Plat

---

Applicants Request

1. Preliminary plat approval for Cedar Ridge Community

Overview / Background

There are two parts to this application, one being a zoning text amendment and the other a preliminary plat review. The text amendment is being processed to address the ambiguity in the current ordinance relating to R3 uses. The land use table specifically omits single family dwellings from the R3 zoning district, while the Dimensional and Design Standards Table specifically includes small detached single family lot dimensional requirements. The Commission and Council should determine if single family is an appropriate use in the R3 zoning district given that the district is a high density residential district and single family, typically a low density use, may not be appropriate. As currently provided, the dimensional standards for the R3 are not traditional standards and permit small lots of 50' in width and a minimum lot size of 6500 square feet.

The 62 acre parcel is being subdivided to create 75 small lot single family home sites, 3 lots for future apartment development (167 units in total), and 7 outlots which will be for future commercial development or stormwater ponding depending upon the location of the parcel.

At present the applicant is proposing construction of the single family homes with necessary infrastructure. Phase I also includes some apartment buildings however, little information is available for that portion of the project. To the east, Outlots E and F will be replatted for commercial development. There is no information available about lot layout or future users. The

main access into the site is through the extension of 381st Lane which will provide access to all apartments and the commercial lots as well as single family units. The other western access is 382nd Drive turning into Falk Avenue which winds through the project providing access to individual lots and functioning like a neighborhood collector road. Two cul de sacs, Fallcrest Court and Farnham Court, also provide access for individual single family lots. Tanger Drive right of way is being provided; running along the eastern edge of the site to provide a southward road extension which will function as a frontage road for the commercial along I-35. There is a curve in the road in the north, to bypass an existing wetland.

There are a variety of issues associated with the project which are enumerated in the information below. One of the main concerns of staff is the areas not being developed as single family. It is unclear what the final product will be on these sites and if the platted properties can adequately accommodate needed parking and building area while meeting setbacks, open space and other performance standards.

Attachments

Issue(s) to Consider

1. Zoning Ordinance Text Amendment
2. Land Use and Zoning
3. Development Plan
4. Plat Standards

Analysis of Issue(s)

1. **Zoning Ordinance Text Amendment**

The Commission and Council are being asked to amend the zoning ordinance to address an inconsistency between the various sections of the Code. In the zoning Districts Use Table Section 6-66, under the Dwelling, Single Family row there is nothing listed in the R3 zoning district, meaning it is not permitted. The Dimensional & Design Standards Table provides regulations for R-3 detached single family, implying this use is permitted by ordinance. To accommodate the higher density uses of the R-3 zoning, the table allows for small lot single family, whereas the lot width is a minimum of 50 feet and the lot dept is 100 feet and the minimum lot size is 6,500 square feet, a little over half the size of R-1 single family lots.

Staff is looking for direction from the Commission and Council on this question. If it is

determined that the R-3 should not allow single family detached lots as one of the unit types, the project could not be approved. If the Commission and Council determine that the R-3 zoning district is an appropriate location for small lot single family, the project could continue to move forward, pending successfully addressing all project issues.

In the recent past, the City Council has expressed some concern about small lot single family development, particularly when achieved through a PUD. Use of the R-3 to permit some small lot development may allow higher density, without requiring only apartments. Further, this may be a solution to direct future developers to the R-3 district for smaller lots rather than granting modifications to detached single family lots in the R-1 or R-2 zoning districts.

2. **Land Use & Zoning**

The adopted Comprehensive Plan designates the site into two different land uses. The eastern section of the site is designated LUB-Business with the western section designed LUR-3 High Density Residential. The High Density Residential designation is for development of over 6 dwelling units per acre. In order to achieve the required density, the property must combine the proposed single family development with a higher density product, like the anticipated apartment buildings.

The zoning map is similar in the split of the two land uses with Business in the east, along I-35 and R-3 High Density Residential in the west. The map defines a line between the two uses although it is unclear if the exact location of the land use split must define the change between residential and commercial uses. Below is an overlay of the zoning map on the site. It shows that a portion of the commercial zoning overlaps the single family on the north and also includes portions of the drainage pond needed for the residential development.

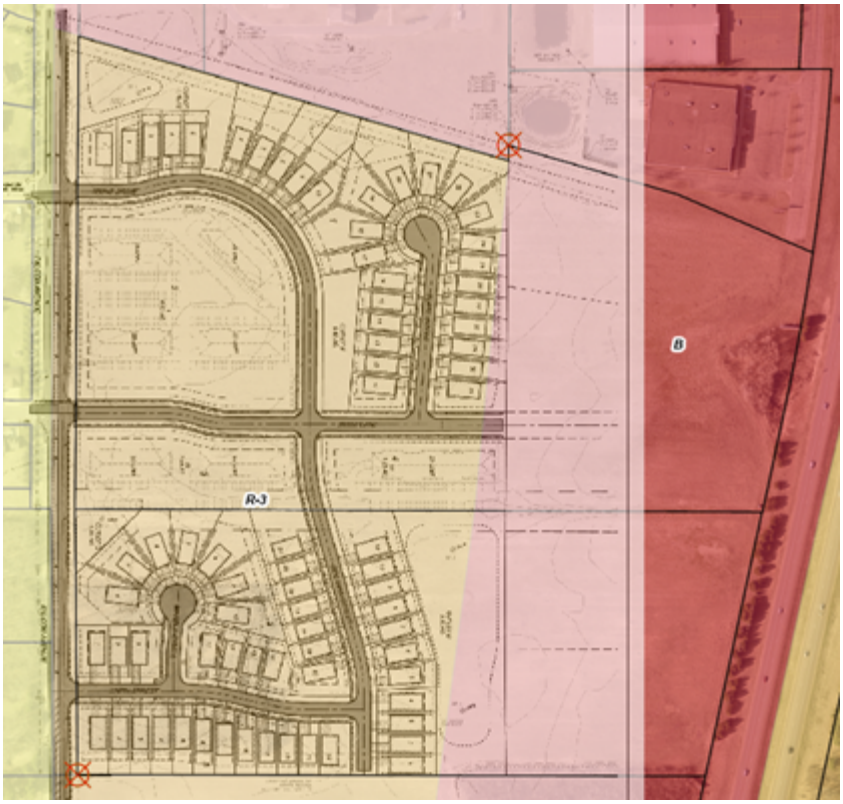

Generally, staff wants to ensure that the amount of land available for commercial is reasonably sized and has dimensional attributes that can accommodate future commercial development without the need of variance. For that reason, staff had requested, and not received, a concept plan which could illustrate a reasonably size non-residential use on the approximate 21 acres designated for commercial development.

3. **Development Overview**

General Plan

The project is comprised of three different land uses. There is the 75 detached single family development located within the R3 zoned area. Many of the lots are located in the western portion of the site with some adjacent to Falcon Avenue, a busy Major Collector road. There is ponding in the northwest also adjacent to Falcon Avenue providing some separation from the traffic, and there is additional pond in the southern single family neighborhood also against the road. It appears that the building pad sites are at a similar elevation to Falcon Avenue meaning there is little ability to create a berm for buffering. The lots immediately adjacent to Falcon Avenue do have larger setbacks, increasing the separation between the road and the building footprint. The landscape plans illustrate more trees along Falcon Avenue providing some screening and it is recommended substantially more plantings be added. For example, Lot 1 Block 5 has 4 trees which equates to 1 tree every 43’ along the side of the lot.

The second land use type is multi-family apartments. The applicant illustrates a total of 167 apartment dwelling units within seven different buildings. There are two located south and west of Falk Avenue and 381st Lane and one 30 unit building east of Falk Avenue. There are an additional four buildings located in the space between Falcon Avenue and the ring road of 382nd Drive. Aside from the building outline and parking lots the applicant has not provided any information about the apartment buildings or landscaping. Any approval for this project would not include formal approval of the apartments and additional applications will be required in the future. However, residents should expect multi-family development in these area. The density for this apartment portion of the project is 16.2 units/acre (167 units/10.3 acres). The total density for the residential portion of the site is 6.29 units/acre, slightly over the "6 and above" density standard.

The third land use is designated for business and commercial uses, consistent with other uses anticipated along I-35, a high traffic and visibility corridor. Aside from the dedication of the Tanger Road right of way and the recognition that 381st Lane will provide access into the commercial area there is little known. The site is a commercial area comprised of outlots E and F which total approximately 21 acres. The calculation has not been updated since the dedication of right of way on the plat and the applicant should correct the lot area table.

Parking

City Code §125-86 requires a minimum of two (2) parking spaces per dwelling unit, each of which are enclosed in attached garages. The single family units will meet this requirement.

For the apartment buildings there is surface parking provided. The total number of outdoor stalls provided are 348, which is slightly over 2 stalls per dwelling unit. Additionally, there will be underground parking although it is unclear the number of stalls available. The ordinance requires 2 free parking stalls per apartment unit. Final parking numbers will need to be provided as part of any site plan review for the apartments.

Design Elements (Façade Materials)

The applicant has not provided any information regarding the single family detached housing nor architectural information for the apartment buildings.

Landscape & Tree Preservation Plan

The applicant has provided a tree preservation plan which depicts the area of existing vegetation, located in the south, adjacent to Falcon Avenue, along the southern lot line on the commercial property. The plans indicate all but 1% of the total 4.17 treed acres are being removed. The only area preserved is along the southern border of the site, adjacent to a ponding area. The ordinance permits up to 50% tree removal for development and therefore the applicant is required to provide 182 new trees. The applicants proposal includes installation of 139 new trees within the residential areas of the site, generally on the perimeter of development. Staff would have preferred the applicant make a more concerted effort to maintain some of the existing trees. This is an attractive section of the site and new development could benefit from maintaining some of the existing vegetation.

Landscaping for the residential project requires a minimum of one tree per dwelling unit. Therefore 242 trees are required on the site along with the 182 replacement trees due to the removal of most site vegetation. In total the developer should be installing 424 new trees. The landscape plan show a total of 139 trees on the entire residential portion of the property which is unacceptable. The plans have little landscaping around any of the apartment buildings and additional plantings should occur along Falcon Avenue. Plantings should also be added around some of the ponding areas and there is the opportunity to create a landscape buffer between the residential portion of the site and the future commercial development. A revised landscape plan would be a condition of approval.

Project Phasing

The applicant has provided a phasing plan which indicates that Phase I includes 381st Lane and land to the north. This would mean that 31 single family homes would be in the first phase along with the 97 apartment units in 4 buildings. The ponding area in Outlot D will also be constructed. As noted above, there is not enough information to grant approvals of the apartment portion of the project and therefore additional city review will be needed to implement the first phase. The second phase would result in the remaining 44 single family units and 70 apartment units in 3 buildings. There is no phasing attributable to the commercial sites.

Access

All roadways through the Development are public streets, which are designed to standard street widths and rights of way, per the City's engineering and design standards. There are no required or proposed parking restrictions on the City streets at this time.

As noted, the primary access to the site is from 381st Lane, which will also provide access from the west to the new commercial area. This means that the roadway will have more traffic than would be anticipated for a typical residential street. The presence of the apartments, and the commercial, along with several of the single family lots, makes this road function more like a major collector. In discussions with the City Engineer, the proposed sizing and configuration of the road should serve anticipated traffic. If the traffic continues to increase, the city could prohibit parking along the road. Future residents should understand that this road will be extended into the adjoining commercial area. A sign noting the future extension should be placed at the end of the roadway. A cul de sac turnaround is required as part of that road construction.

The placement of the four roads into the site are based somewhat on existing conditions. The two northern roads, 381st Lane and 382nd Drive each form a 4-way intersection with the two existing roads across Falcon Avenue. The most southern road is not aligned with any existing road. In the east, Tanger Drive is set to the property line, and the proposal extends the road southward, consistent with the City's Transportation Plan. The road will act as a frontage road for the commercial businesses fronting along I-35. As presently proposed the horizontal curve proposed does not appear to meet State Aid standards and will need to be modified. Staff recognizes that the curve in the road is to address the existing wetlands, but Tanger Drive will be on the State Aid system and will need to meet State and City design criteria. Wetland impacts may be necessary to meet the design standards, recognizing the current terminus of the road in the north. The County, and the City concurs, that turn lanes are required at the entrances to the site. These should be shown on the final plans and approved by Chisago County and the City.

Of final note is the extension of Falk Ave along the southern border of the site. The plan shows the roadway pavement stopping short of the property line. The pavement should be extended to the lot line, and a temporary cul de sac be installed which will impact the buildability of the most southern lots.

Trails and Sidewalks

Sidewalks are proposed on both sides of 381st Lane and on one side of the ring road through the project and along both of the cul de sacs. There will also be a trail installed along Falcon Avenue at the applicants expense. The County noted that the pedestrian crossings at Falcon Avenue are not shown.

Wetlands

There was a previous wetland delineation done on the site which showed wetlands in the east, which would be impacted by the extension of Tanger Drive. A recent Delineation Report from 2024, found that the northern wetland continues to remain and is approximately 1.25 acres. The other previously designated wetlands did not meet all three characteristics of wetlands and have been removed from the wetland survey.

Utilities and Site Grading

The applicant has been working with the City Engineer on site utilities and grading. The Engineer has indicated most of the comments have been addressed although final plans have not been submitted. Final plans would occur during the final plat review process.

Signage

The applicant has not provided any signage information for the subdivision. Any future signage must comply with the ordinance and the applicant will need to obtain a sign permit.

Parks, Trails and Open Space

The Parks, Trails and Open Space Commission will review this at their May 5, 2025 meeting and their recommendation will be provided at the meeting.

4. **Plat Standards**

The developer appears to be meeting the R-3 detached single family dimensional standards found in the Dimensional & Design Standards Table. The applicant should provide information about each of the lot widths, and lot depths. No variances were requested, and it is not anticipated that any would be granted for the project, either for individual lots or for future construction.

Lot	Setbacks

	Width/ft	Depth/ft	Area/sf	Front/fs	Side/ft	Rear corner/ft	Rear/ft	Height/ft	Min. Bldg. size
R3	50	100	6,500	30	6	15	30	35	800 sq ft

Staff Recommendation

1. Staff requests the City Council to provide direction regarding the zoning ordinance language relating to single family development in the R3 zoning district.

2. Staff has identified several issues which should be addressed by the applicant prior to granting any approvals. Staff is recommending the application be continued to permit the applicant time to address the following issues:

1. Modify the landscape plan to significantly increase the plantings, including trees, shrubs, and grasses.
2. Provide information regarding the apartment project including building elevations, and detailed site plan information to ensure future development can comply with ordinance performance standards.
3. The applicant revise the Tanger Drive alignment to meet State Aid roadway design standards.
4. The applicant update lot information to, including lot width and depth of each single family lot and final parcel size of outlots E and F.
5. The applicant provide a cul de sac at the end of Obsidian Street and adjust the preliminary plat accordingly.
6. There are outstanding engineering items that have not been fully addressed from the City Engineers memo.

Planning Commission Recommendation

The Planning Commission held the public hearing on May 6, 2025 and received public testimony relating to proposed text amendment allowing single family homes in the R3 zoning district and the Cedar Ridge Preliminary Plat.

The Planning Commission made the following recommendations:

Text Amendment to allow single family homes as a permitted use in the R3 Zoning District

Item 1) Text Amendment to allow Single Family Homes in the R3 Zoning District

Motion to the City Council to recommend denial to the Text Amendment to Chapter 66-6

Permitted Uses to allow single family homes as a permitted use in the R3 Zoning District with the following findings of fact.

1. The use of single family homes is not following the guidance of the Comprehensive Plan if the zoning is not permitted.
2. This would open allow of the R3 zoning districts to allow for single-family homes

Item 2) Cedar Ridge Preliminary Plat

Motion to the City Council to recommend denial to the Cedar Ridge Preliminary Plat with the following findings of fact.

1. The preliminary plat does not meet the zoning district requirements.
2. The preliminary plat is not consistent with the comprehensive plan.

Requested Action

The City Council shall take one of the following actions:

1. Recommend the approval of the Cedar Ridge Preliminary Plat with findings of fact.
2. Recommend the denial of the Cedar Ridge Preliminary Plat with findings of fact.
3. Request the applicant provide an extension of the request.

Attachments

1. Preliminary Plat Dated 04-24-2025
2. Civil Plans Dated 04-24-2025

Voting Requirements:

Voting Options **Simple Majority**

Preliminary Plat of CEDAR RIDGE COMMUNITY

CITY OF NORTH BRANCH
CHISAGO COUNTY, MN

SOILS CHART

Map symbol & soil name	Hydrologic group	Water table depth (in)
676B: Kost loamy fine sand, 1 to 6 percent slopes	A	>80
328B: Sartell fine sand, 1 to 6 percent slopes	A	>80
161: Isanti loamy fine sand	A/D	>80
162: Lino loamy fine sand	A/D	12

* Data from USDA Web Soil Survey

SOIL BORING LOG Matthew J. Blesi – MPCA Cert. No. C4952

Soil Boring #	Elevation	Mottling	Elev. of Mottled Soil
Soil Boring 1	1065.2	None to 156"	N/A
Soil Boring 2	1064.5	None to 111"	N/A
Soil Boring 3	1065.2	None to 150"	N/A
Soil Boring 4	1064.5	None to 128"	N/A

Proposed Plat Description:
Outlot C and Outlot D, NORTH BRANCH MEADOWS, Chisago County, Minnesota.

Survey Notes:
1. *This survey was performed without the benefit of an updated title report. No additional search for restrictions or easements was made by the surveyor. We reserve the right to update this survey upon receipt of updated title documentation. Reference Title Commitment No. MN22255 dated 12–14–21.*
2. *Portions of woods edge and field edge were digitized from Autodesk Civil 3D 2020 online aerial imagery and are for reference purposes only.*
3. *Utilities shown per Gopher State One Call Ticket No. 220530468 and 250220710. Not all utilities may have been located. Multiple tickets failed to result in the East Central Energy transmission line being marked.*
4. *Contours were created using GPS RTK methods (NAVD 88).*
5. *Subject property is NOT part of a shoreland district or within a flood plain district as mapped by FEMA.*
6. *Topography and site improvements were collected 3/7/22.*
7. *Wetlands were previously delineated by Midwest Natural Resources, Inc. in 2018 for the plat of NORTH BRANCH MEADOWS and are shown hereon. A more recent delineation was completed by Bogart, Pederson and Assocaites, Inc. on 10/17/24.*
8. *There is an existing underground electric transmission line currently owned by East Central Energy that follows the general path of the overhead power line along the common line of Outlots C and D of NORTH BRANCH MEADOWS. The overhead power lines are owned by Southern Municipal Power Agency. The power lines existed on the date of the plat recording, but no easement was dedicated. We have tried to contact the Southern Minnesota Municipal Power Agency for a partial release, but have not received a response.*
9. *East Central Energy's underground transmission line may be impacted by the proposed infiltration basin and may need to be consulted with East Central Energy.*

I hereby certify that a boundary survey has been completed for the preliminary plat of CEDAR RIDGE COMMUNITY, Chisago County, Minnesota.

Signed: Craig Wensmann
Craig A. Wensmann
Date: 1/14/25 Lic. No. 47466

LINE	BEARING	DISTANCE
L1	S76°35'28"E	78.76

CURVE	RADIUS	DISTANCE	DELTA
C1	500.00	41.37	4°44'26"

LOT AREAS

Block	Lot	Total Lot Area (S.F.)	Block	Lot	Total Lot Area (S.F.)	Block	Lot	Total Lot Area (S.F.)	Block	Lot	Total Lot Area (S.F.)
1	1	12,833	1	20	21,507	3	7	14,022	4	4	8,567
1	2	9,038	1	21	14,351	3	8	17,095	4	5	9,042
1	3	7,998	1	22	16,415	3	9	13,794	4	6	8,960
1	4	7,436	1	23	13,515	3	10	14,502	4	7	7,910
1	5	7,916	1	24	8,249	3	11	10,950	4	8	7,538
1	6	14,965	1	25	7,891	3	12	7,374	4	9	7,538
1	7	14,622	1	26	8,071	3	13	6,760	4	10	7,539
1	8	16,240	1	27	8,289	3	14	9,331	4	11	17,825
1	9	17,979	1	28	8,507	3	15	12,660	4	12	80,409
1	10	12,094	1	29	8,726	3	16	6,956	5	1	13,646
1	11	12,775	1	30	8,944	3	17	6,760	5	2	9,100
1	12	7,384	1	31	14,124	3	18	6,760	5	3	9,100
1	13	7,384	2	1	262,045	3	19	6,760	5	4	9,100
1	14	7,384	3	1	10,104	3	20	6,760	5	5	9,098
1	15	7,384	3	2	6,760	3	21	15,980	5	6	8,986
1	16	9,122	3	3	10,188	3	22	106,428	5	7	8,583
1	17	12,242	3	4	22,714	4	1	7,540	5	8	7,966
1	18	18,519	3	5	13,274	4	2	7,540	5	9	7,348
1	19	14,682	3	6	14,011	4	3	7,540	5	10	6,926
Outlot E		925,504	Outlot C		13,319	Outlot A		60,907	5	11	6,769
			Outlot D		131,699	Outlot B		27,216	5	12	10,010

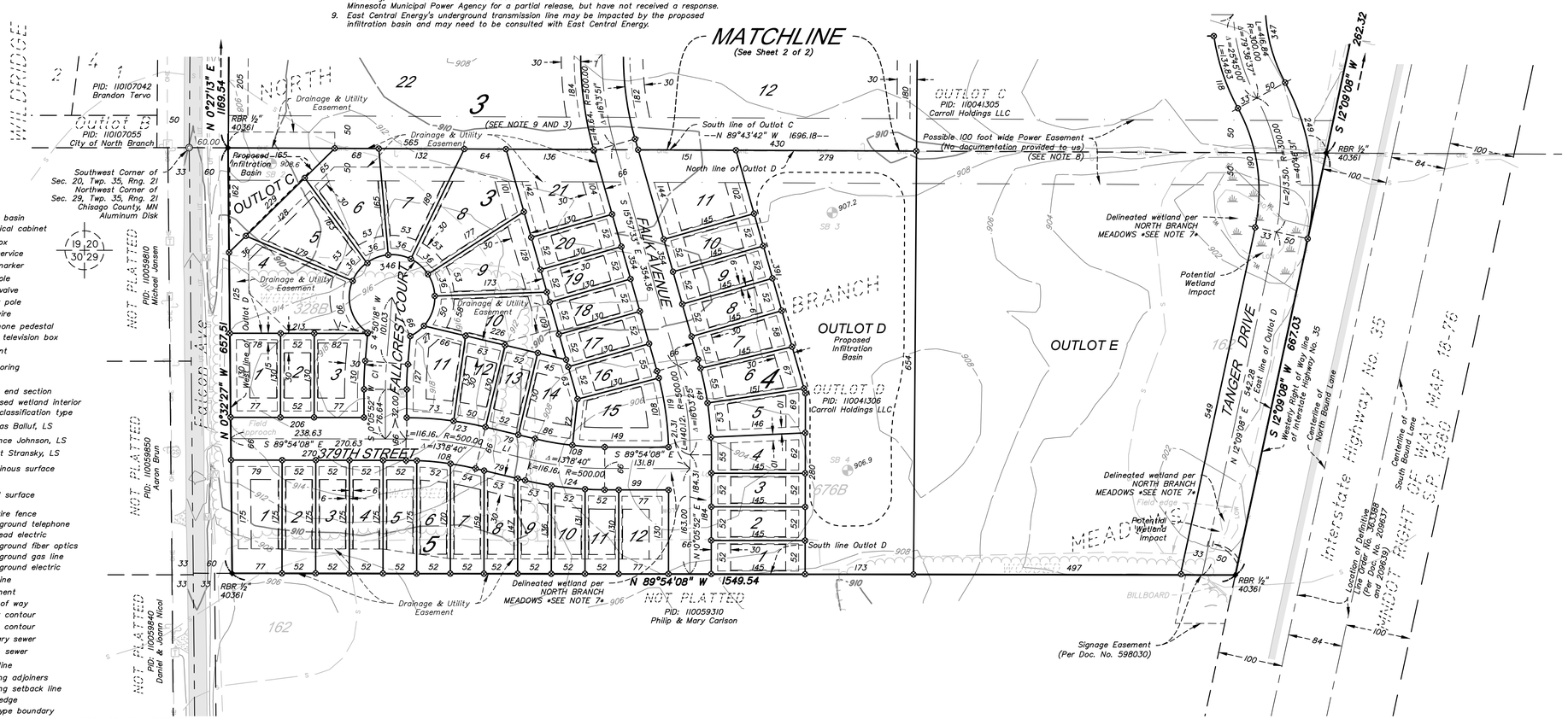

LEGEND:

- Denotes catch basin
- Denotes electrical cabinet
- Denotes mailbox
- Denotes gas service
- Denotes gas marker
- Denotes manhole
- Denotes watervalve
- Denotes power pole
- Denotes guy wire
- Denotes telephone pedestal
- Denotes cable television box
- Denotes hydrant
- Denotes soil boring
- Denotes well
- Denotes flared end section
- Denotes proposed wetland interior
- Denotes soils classification type
- LS 40361 — Denotes Thomas Balluf, LS
- LS 13115 — Denotes Terrance Johnson, LS
- LS 14945 — Denotes Robert Stransky, LS
- Denotes bituminous surface
- Denotes gravel surface
- Denotes barbwire fence
- Denotes underground telephone
- Denotes overhead electric
- Denotes underground fiber optics
- Denotes underground gas line
- Denotes underground electric
- Denotes tree line
- Denotes easement
- Denotes right of way
- Denotes major contour
- Denotes minor contour
- Denotes sanitary sewer
- Denotes storm sewer
- Denotes waterline
- Denotes existing adjoiners
- Denotes building setback line
- Denotes field edge
- Denotes soil type boundary
- Denotes delineated wetland per NORTH BRANCH MEADOWS
- Denotes proposed wetland edge

VICINITY MAP
Sec. 20 & 29, Twp. 35, Rng. 21
Chisago County, MN

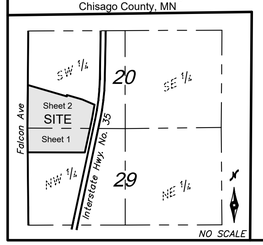

Bearings are based on the plat of NORTH BRANCH MEADOWS

- ● Denotes found iron monument
- ⊗ Denotes ½ inch by 14 inch iron monument with a plastic plug stamped R.L.S. 47466 to be set within one year of platting date
- ◆ Denotes found rebar
- ◎ Denotes found metal disk
- ○ Denotes set ½ inch by 14 inch iron monument with a plastic plug stamped R.L.S. 47466
- △ Denotes found large nail

REFERENCE BENCHMARK:
MNDOT Geodetic Monument "DANY"
Elevation = 897.37 feet (NAVD 88)

PLAT BENCHMARK:
Top nut hydrant in the NW quad of Falcon Ave. and 382nd Drive
Elevation = 915.28 feet (NAVD 88)

OWNER:
Carroll Holdings, LLC
33098 Marmon St. NE
Cambridge MN, 55008

DEVELOPER:
Cedar Ridge Community LLC
12222 313th Avenue,
Princeton, MN 55371
(763) 360–1453

SURVEYORS & ENGINEERS:
Bogart, Pederson & Associates, Inc.
13076 First Street
Becker, MN 55308–9322
763–262–8822

TOTAL AREA: 62.03± Acres

EXISTING ZONING:
R–3 High Density Residential
B – Business

PROPOSED ZONING:
R–3 High Density Residential (Residential Lots)
B – Business (Outlots)

MINIMUMS:
100' Depth
50' Width
6,500 S.F. lot size

DENOTES BUILDING SETBACKS:
Detached Single Family Lots
30' Front
6' Side (Interior)
30' Rear (Interior)
15' Rear (Corner)
30' Front (Corner)
20' Wetland

Drainage and Utility Easements are shown thus:

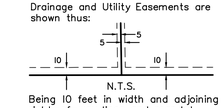

Being 10 feet in width and adjoining right–of–way lines and rear lot lines, also being 5 feet in width and adjoining lot lines, unless otherwise indicated, as shown on plat.

DATE: 1/10/25
FIELD DATE: March, 7th 2022
BK/PG: 13.1/pg. 1
DRAWN BY: CK
CHECKED BY: CAW/DJJ
DWG FILE: 22–0030.02 Prelim
FILE NO: 22–0030.02

REVISIONS:
3/31/25: City Comments
4/24/25: City Comments

I hereby certify that this survey, plan, or report was prepared by me or under my direct supervision and that I am a duly Licensed Land Surveyor under the laws of the State of Minnesota.

Signed: Craig Wensmann
Craig A. Wensmann
Date: 1/14/25 Lic. No. 47466

BOGART, PEDERSON & ASSOCIATES, INC.
LAND SURVEYING
CIVIL ENGINEERING
MAPPING
13076 FIRST STREET, BECKER, MN 55308–9322
TEL: 763–262–8822 FAX: 763–262–8844

PRELIMINARY PLAT
for
CEDAR RIDGE COMMUNITY
Cedar Ridge Community LLC
City of North Branch
Chisago County, MN

BOGART, PEDERSON & ASSOCIATES, INC.

Preliminary Plat of CEDAR RIDGE COMMUNITY

CITY OF NORTH BRANCH
CHISAGO COUNTY, MN

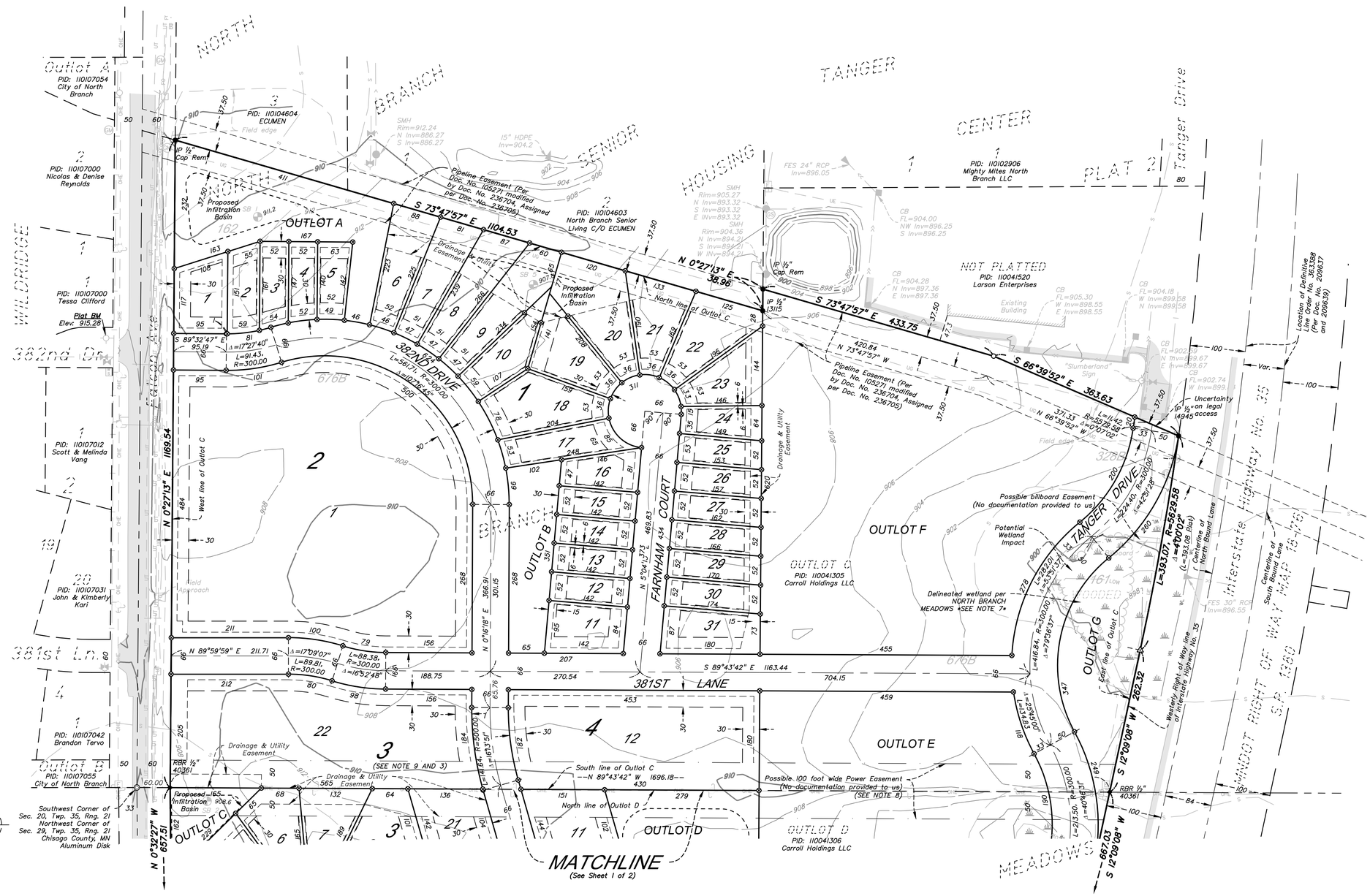

VICINITY MAP

Sec. 20 & 29, Twp. 35, Rng. 21
Chisago County, MN

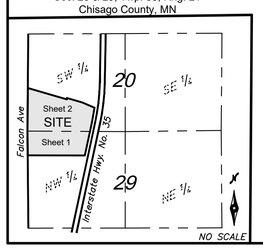

LEGEND:

- Denotes catch basin
- Denotes electrical cabinet
- Denotes mailbox
- Denotes gas service
- Denotes gas marker
- Denotes manhole
- Denotes watervalve
- Denotes power pole
- Denotes guy wire
- Denotes telephone pedestal
- Denotes cable television box
- Denotes hydrant
- Denotes soil boring
- Denotes well
- Denotes flared end section
- Denotes proposed wetland interior
- YS Denotes soils classification type
- LS 40361 Denotes Thomas Balluf, LS
- LS 13115 Denotes Terrance Johnson, LS
- LS 14945 Denotes Robert Stransky, LS
- Denotes bituminous surface
- Denotes gravel surface
- X Denotes barbwire fence
- UT Denotes underground telephone
- OHE Denotes overhead electric
- FO Denotes underground fiber optics
- UG Denotes underground gas line
- Denotes easement
- Denotes right of way
- Denotes major contour
- Denotes minor contour
- Denotes sanitary sewer
- Denotes storm sewer
- Denotes waterline
- Denotes existing adjoiners
- Denotes building setback line
- Denotes field edge
- S Denotes soil type boundary
- LOW Denotes delineated wetland per NORTH BRANCH MEADOWS
- WL Denotes proposed wetland edge
- UE Denotes underground electric
- Denotes tree line

BOGART, PEDERSON & ASSOCIATES, INC.

Bearings are based on the plat of NORTH BRANCH MEADOWS

- ● Denotes found iron monument
- ⊗ Denotes ½ inch by 14 inch iron monument with a plastic plug stamped R.L.S. 47466 to be set within one year of platting date
- ◆ Denotes found rebar
- ◎ Denotes found metal disk
- ○ Denotes set ½ inch by 14 inch iron monument with a plastic plug stamped R.L.S. 47466
- △ Denotes found large nail

REFERENCE BENCHMARK:
MNDOT Geodetic Monument "DANY"
Elevation = 897.37 feet (NAVD 88)

PLAT BENCHMARK:
Top nut hydrant in the NW quad of Falcon Ave. and 382nd Drive
Elevation = 915.28 feet (NAVD 88)

OWNER:
Carroll Holdings, LLC
33098 Marmon St. NE
Cambridge MN, 55008

DEVELOPER:
Cedar Ridge Community LLC
12222 313th Avenue,
Princeton, MN 55371
(763) 360-1453

SURVEYORS & ENGINEERS:
Bogart, Pederson & Associates, Inc.
13076 First Street
Becker, MN 55308-9322
763-262-8822

TOTAL AREA: 62.03± Acres

EXISTING ZONING:
R-3 High Density Residential
B - Business

PROPOSED ZONING:
R-3 High Density Residential (Residential Lots)
B - Business (Outlots)

MINIMUMS:
100' Depth
50' Width
6,500 S.F. lot size

DENOTES BUILDING SETBACKS:
Detached Single Family Lots
30' Front
6' Side (Interior)
30' Rear (Interior)
15' Rear (Corner)
30' Front (Corner)
20' Wetland

Drainage and Utility Easements are shown thus:

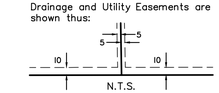

Being 10 feet in width and adjoining right-of-way lines and rear lot lines, also being 5 feet in width and adjoining lot lines, unless otherwise indicated, as shown on plat.

DATE: 1/10/25
FIELD DATE: March, 7th 2022
BK/PG: 13.1/pg. 1
DRAWN BY: CK
CHECKED BY: CAW/DJJ
DWG FILE: 22-0030.02 Prelim
FILE NO: 22-0030.02

REVISIONS:
3/31/25: City Comments
4/24/25: City Comments

I hereby certify that this survey, plan, or report was prepared by me or under my direct supervision and that I am a duly Licensed Land Surveyor under the laws of the State of Minnesota.

Signed: Craig Wensmann
Craig A. Wensmann
Date: 1/14/25 Lic. No. 47466

BOGART, PEDERSON & ASSOCIATES, INC.
LAND SURVEYING
CIVIL ENGINEERING
MAPPING
13076 FIRST STREET, BECKER, MN 55308-9322
TEL: 763-262-8822 FAX: 763-262-8844

PRELIMINARY PLAT
for
CEDAR RIDGE COMMUNITY
Cedar Ridge Community LLC
City of North Branch
Chisago County, MN

SHEET 2 OF 2

CEDAR RIDGE COMMUNITY LLC

CEDAR RIDGE COMMUNITY

FALCON AVE N

CITY OF NORTH BRANCH, CHISAGO COUNTY, MN

APRIL, 2025

PRELIMINARY PLANS

CIVIL & SURVEY PLANS PREPARED BY:

Bogart, Pederson
& Associates, Inc.
CIVIL ENGINEERING
LAND SURVEYING
ENVIRONMENTAL SERVICES
Traditional Values · Creative Solutions

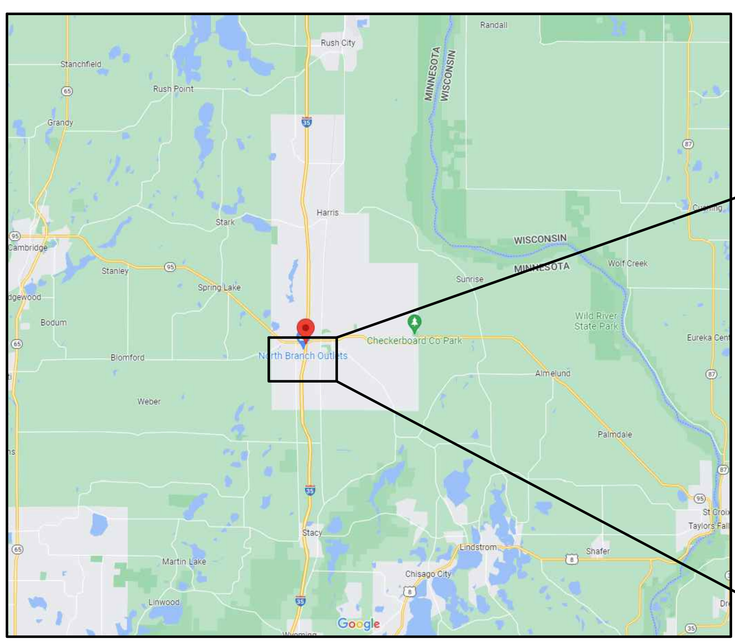

CHISAGO COUNTY, MINNESOTA

PROJECT LOCATION

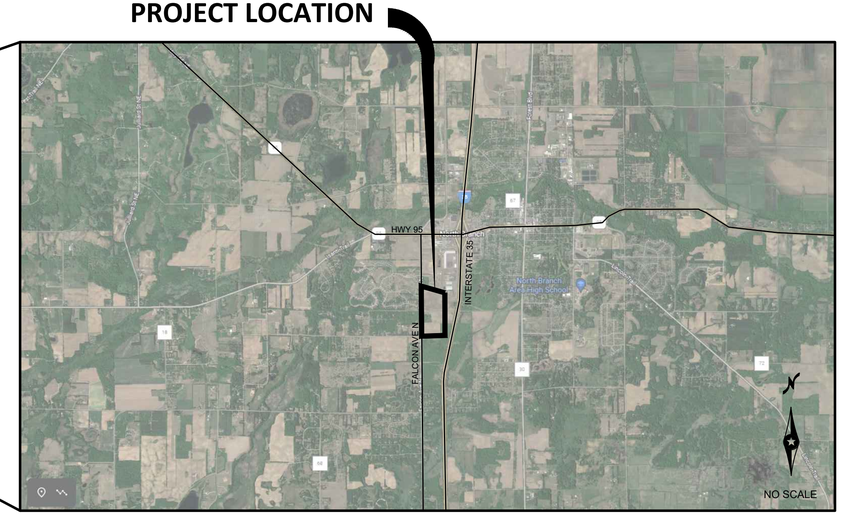

VICINITY MAP

Sheet List Table	
Sheet Number	Sheet Title
C0	Cover
C1.1	Existing Conditions
C1.2	Tree Preservation & Removals
C2.0	Overall Site Plan
C2.1	North Site Plan
C2.2	South Site Plan
C2.3	Future Development
C3.1	North Grading Plan
C3.2	South Grading Plan
C4.1	North Utility Plan
C4.2	South Utility Plan
C5.1	382nd & Falk Ave (Street & Storm)
C5.2	Falk Ave (Street & Storm)
C5.3	381st Lane (Street & Storm)
C5.4	Farnham Ct (Street & Storm)
C5.5	379th Street (Street & Storm)
C5.6	Fallcrest Ct (Street & Storm)
C6.1	382nd & Falk Ave (Sani. & Water)
C6.2	Falk Ave (Sani. & Water)
C6.3	381st Lane (Sani. & Water)
C6.4	Farnham Ct (Sani. & Water)
C6.5	379th Street (Sani. & Water)
C6.6	Fallcrest Ct (Sani. & Water)
C6.7	Falcon Avenue N (Water)
C6.8	Service Information
C7.1	Turn Lane Plan
C7.2	Traffic Control Plan (Turn Lane)
C7.3	Traffic Control Plan (Detour)
C8.1	North Erosion Control Plan
C8.2	South Erosion Control Plan
C8.3	SWPPP Narrative
C9.1	Details
C9.2	Details
C9.3	Details
C9.4	Details
C9.5	Details
C10.1	North Landscape Plan
C10.2	South Landscape Plan

REV NO.	DATE	DESCRIPTION
1	04/01/2025	REVISION PER CITY REVIEW
2	04/24/2025	REVISION PER CITY REVIEW

PRIVATE UTILITIES SHOWN ARE QUALITY LEVEL D.
QUALITY LEVEL D PROVIDES THE MOST BASIC LEVEL OF INFORMATION. IT INVOLVES COLLECTING DATA FROM EXISTING UTILITY RECORDS. RECORDS MAY INCLUDE AS-BUILT DRAWINGS, DISTRIBUTION AND SERVICES MAPS, EXISTING GEOGRAPHIC INFORMATION SYSTEM DATABASES, CONSTRUCTION PLANS, ETC.

N:\Projects-Current\22-0030-02 Bercier North Branch Plat\Civil\CAD Files\NB Cover\SWPPP.dwg
4/24/2025 3:06 PM

REV NO.	DATE	DESCRIPTION
1	04/01/2025	REVISION PER CITY REVIEW
2	04/24/2025	REVISION PER CITY REVIEW

DATE: 04/24/2025
DESIGN BY: MJM
DRAWN BY: MJM
CHECKED BY: CJD
DWG FILE:
FILE NO.: 22-0030.00

I hereby certify that this plan, specification, or report was prepared by me or under my direct supervision and that I am a duly Licensed Professional Engineer under the laws of the State of Minnesota.

NOT FOR CONSTRUCTION

Signed: Christopher J. Dahn
Date: Lic. No. 58628

BOGART, PEDERSON & ASSOCIATES, INC.
LAND SURVEYING
CIVIL ENGINEERING
ENVIRONMENTAL SERVICES
13076 FIRST STREET, BECKER, MN 55308-9322
TEL: 763-262-9822 FAX: 763-262-9844

CEDAR RIDGE COMMUNITY LLC
CEDAR RIDGE COMMUNITY
City of North Branch, Chisago County, MN

EXISTING CONDITIONS

SHEET NO.
C1.1

4/24/2025 3:06 PM N:\Projects Current\22-0030.02 Bellaire North Branch Plat\Civil\CAD Files\NB Site Existing.dwg

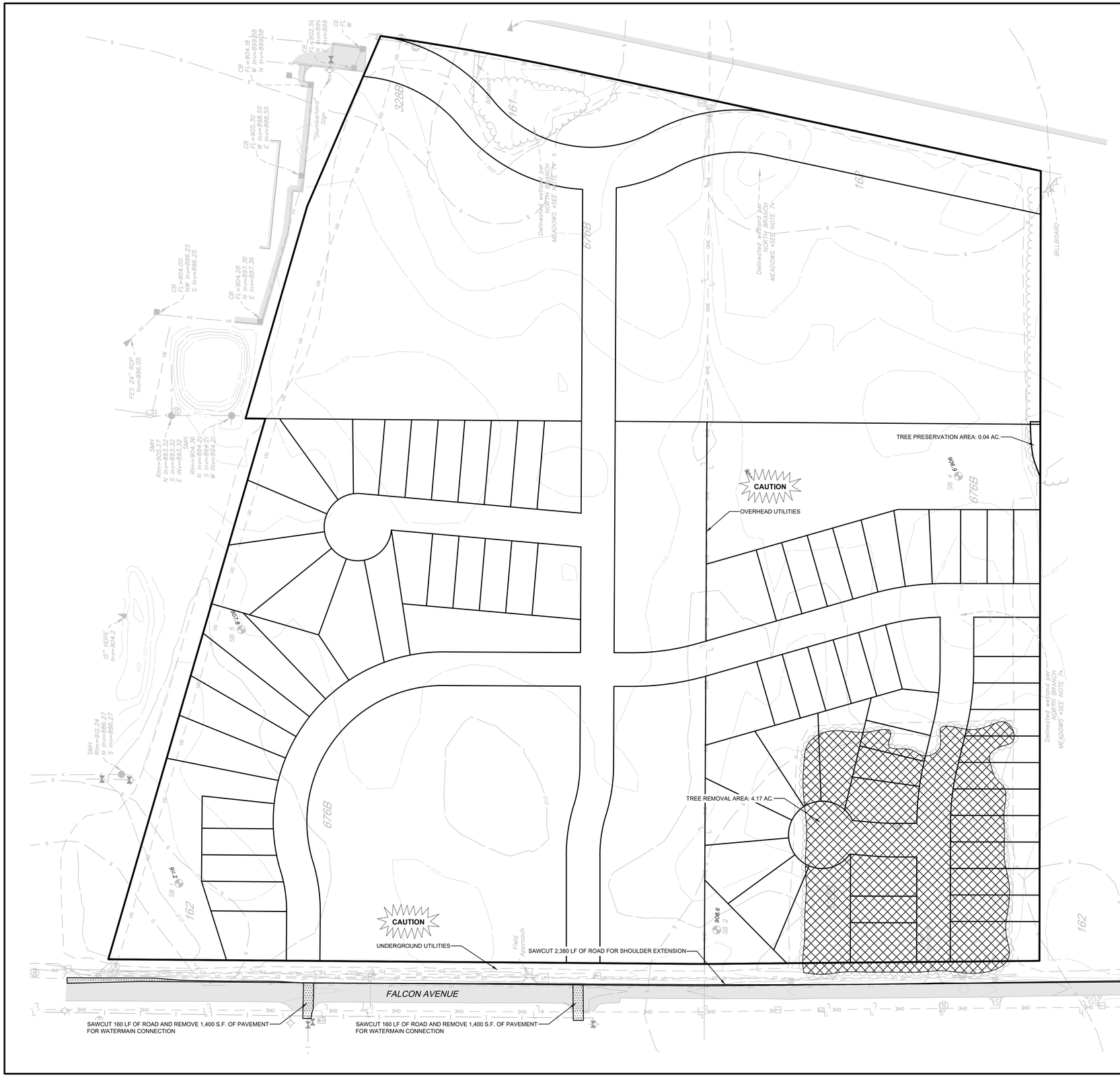

LEGEND:

- REMOVE PAVEMENT SECTION (AS INDICATED).
- REMOVE EXISTING TREES (AS INDICATED)
- REMOVE FEATURE (AS INDICATED)
- SALVAGE (AS INDICATED)
- SAW-CUT

0' 100' 200'
SCALE: 1"=100'

DEMOLITION GENERAL NOTES:

1. IT IS THE RESPONSIBILITY OF THE CONTRACTOR TO PERFORM OR COORDINATE ALL UTILITY CONNECTIONS AND RELOCATIONS FROM EXISTING UTILITY LOCATIONS TO THE PROPOSED BUILDING, AS WELL AS TO ALL ON-SITE AMENITIES. THESE CONNECTIONS INCLUDE BUT ARE NOT LIMITED TO WATER, SANITARY SEWER, UNDERGROUND GAS, ETC.
2. THE CONNECTIONS SHALL BE PERFORMED IN ACCORDANCE WITH STATE AND LOCAL STANDARD SPECIFICATIONS FOR CONSTRUCTION. UTILITY CONNECTIONS (UNDERGROUND GAS, WATERMAIN, AND STORM SEWER) MAY REQUIRE A PERMIT FROM THE CITY.
3. THE CONTRACTOR SHALL VERIFY THE ELEVATIONS AT PROPOSED CONNECTIONS TO EXISTING UTILITIES PRIOR TO ANY DEMOLITION.
4. CONTRACTOR SHALL COORDINATE WITH THE CITY OF NORTH BRANCH FOR ALL UTILITY DISCONNECTIONS, SERVICE TERMINATIONS AND REMOVALS. CONTRACTOR SHALL COORDINATE UTILITY DISCONNECTIONS AND RELOCATIONS WITH THE UTILITY PROVIDERS PRIOR TO THE START OF CONSTRUCTION. ALL SERVICE CONNECTIONS/DISCONNECTIONS SHALL BE PERFORMED IN ACCORDANCE WITH STATE AND LOCAL STANDARD SPECIFICATIONS FOR CONSTRUCTION. CONTRACTOR SHALL OBTAIN ALL NECESSARY STATE AND LOCAL PERMITS NECESSARY FOR UTILITY CONSTRUCTION AND WORK WITHIN ADJACENT RIGHT-OF-WAYS.
5. IF DEWATERING IS REQUIRED FOR THIS PROJECT, THE PUMP DISCHARGE SHALL BE TREATED PRIOR TO BEING DISCHARGED OFF-SITE OR INTO A SURFACE WATER. THE DISCHARGE SHALL BE VISUALLY CHECKED TO ENSURE THAT IT IS VISIBLY CLEAN WATER.
6. CONTRACTOR SHALL PROTECT UTILITIES, STRUCTURES AND TREES (NOTED AND NOT NOTED) TO REMAIN AND SHALL BE RESPONSIBLE TO REPAIR DAMAGES TO ANY FEATURES TO REMAIN.
7. TREES 6" AND LARGER AND OTHER NOTABLE VEGETATION WERE IDENTIFIED AND LOCATED DURING THE COURSE OF THE SURVEY. CONTRACTOR SHALL FIELD VERIFY THE EXISTING CONDITIONS OF THE PROJECT AREA AND REMOVE ALL TREES NOT DESIGNATED TO BE SAVED AND PROTECTED. ALL TREES, DEBRIS, ROOTS, BOULDERS AND TOPSOIL SHALL BE REMOVED FROM THE SITE.

TREE PRESERVATION NOTES:

• TREE REMOVAL AREA:	4.17 ACRES
• TREE PRESERVATION AREA:	0.04 ACRES
• TREE PRESERVATION %:	1%
• 50% OF TREE REMOVAL AREA:	2.08 ACRES
• ASSUMPTIONS FOR REPLACEMENT:	500 S.F. OF COVERAGE PER TREE
• 2.08 ACRES / 500 S.F.	182 TREES TO BE REPLACED

CALL 48 HOURS BEFORE DIGGING:
GOPHER STATE ONE CALL
TWIN CITY AREA 651-454-0002
MINNESOTA TOLL FREE 1-800-252-1166

REV NO.	DATE	DESCRIPTION
1	04/01/2025	REVISION PER CITY REVIEW
2	04/24/2025	REVISION PER CITY REVIEW

DATE: 04/24/2025
DESIGN BY: MJM
DRAWN BY: MJM
CHECKED BY: CJD
DWG FILE: DEMOLITION
FILE NO.: 22-0030.00

I hereby certify that this plan, specification, or report was prepared by me or under my direct supervision and that I am a duly Licensed Professional Engineer under the laws of the State of Minnesota.

NOT FOR CONSTRUCTION

Signed: Christopher J. Dahn
Date: Lic. No. 58628

BOGART, PEDERSON & ASSOCIATES, INC.
LAND SURVEYING
CIVIL ENGINEERING
ENVIRONMENTAL SERVICES
13076 FIRST STREET, BECKER, MN 55308-9322
TEL: 763-262-9622 FAX: 763-262-9644

CEDAR RIDGE COMMUNITY LLC
CEDAR RIDGE COMMUNITY
City of North Branch, Chisago County, MN

TREE PRESERVATION & REMOVALS

SHEET NO.
C1.2

N:\Projects Current\22-0030.02 Belzer North Branch Pine\Civil\CAD Files\NB Tree Preserve.dwg 3:06 PM 4/24/2025

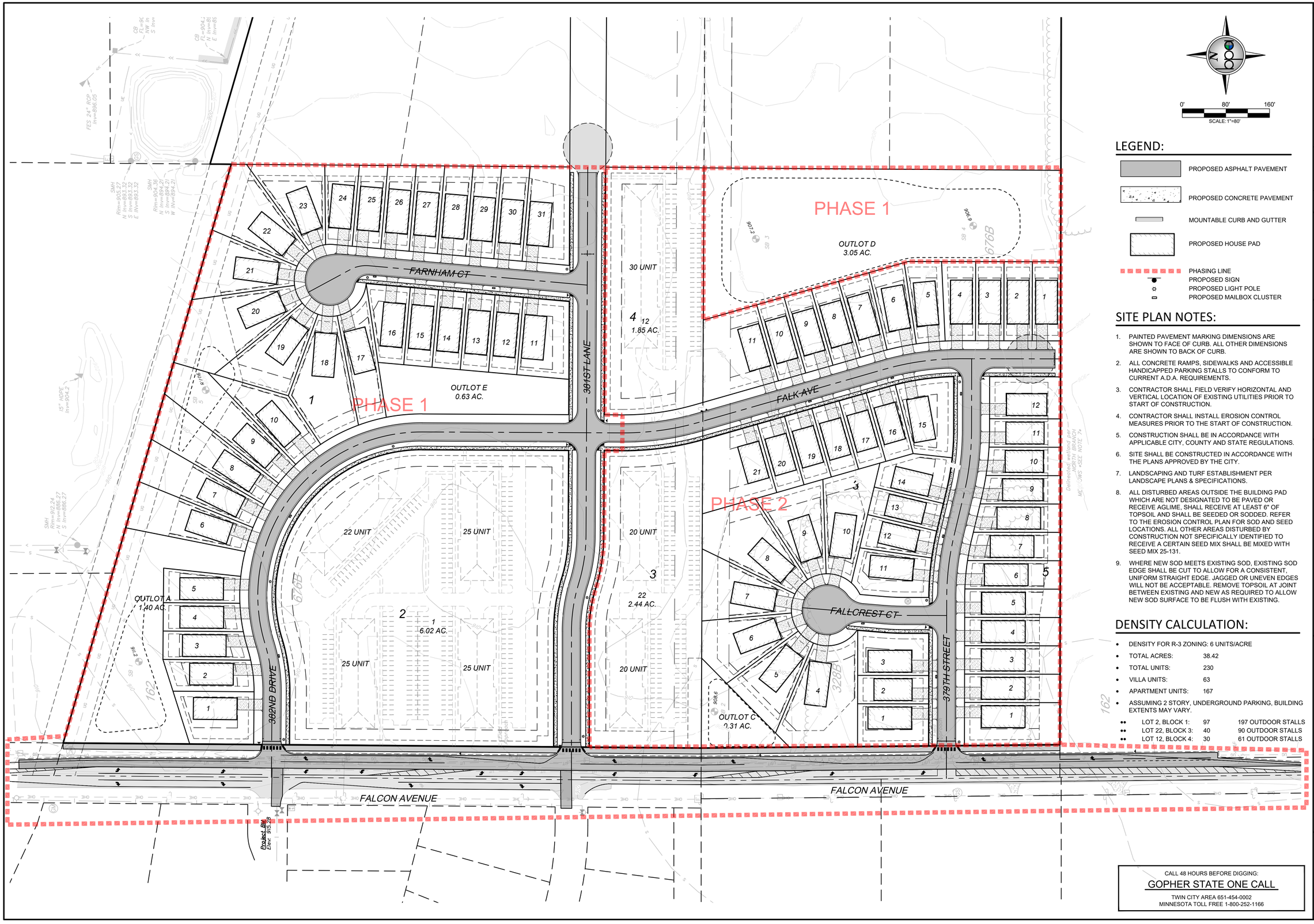

0' 80' 160'
SCALE: 1"=80'

LEGEND:

- PROPOSED ASPHALT PAVEMENT
- PROPOSED CONCRETE PAVEMENT
- MOUNTABLE CURB AND GUTTER
- PROPOSED HOUSE PAD
- PHASING LINE
- PROPOSED SIGN
- PROPOSED LIGHT POLE
- PROPOSED MAILBOX CLUSTER

SITE PLAN NOTES:

1. PAINTED PAVEMENT MARKING DIMENSIONS ARE SHOWN TO FACE OF CURB. ALL OTHER DIMENSIONS ARE SHOWN TO BACK OF CURB.
2. ALL CONCRETE RAMPS, SIDEWALKS AND ACCESSIBLE HANDICAPPED PARKING STALLS TO CONFORM TO CURRENT A.D.A. REQUIREMENTS.
3. CONTRACTOR SHALL FIELD VERIFY HORIZONTAL AND VERTICAL LOCATION OF EXISTING UTILITIES PRIOR TO START OF CONSTRUCTION.
4. CONTRACTOR SHALL INSTALL EROSION CONTROL MEASURES PRIOR TO THE START OF CONSTRUCTION.
5. CONSTRUCTION SHALL BE IN ACCORDANCE WITH APPLICABLE CITY, COUNTY AND STATE REGULATIONS.
6. SITE SHALL BE CONSTRUCTED IN ACCORDANCE WITH THE PLANS APPROVED BY THE CITY.
7. LANDSCAPING AND TURF ESTABLISHMENT PER LANDSCAPE PLANS & SPECIFICATIONS.
8. ALL DISTURBED AREAS OUTSIDE THE BUILDING PAD WHICH ARE NOT DESIGNATED TO BE PAVED OR RECEIVE AGLIME, SHALL RECEIVE AT LEAST 6" OF TOPSOIL AND SHALL BE SEEDED OR SODDED. REFER TO THE EROSION CONTROL PLAN FOR SOD AND SEED LOCATIONS. ALL OTHER AREAS DISTURBED BY CONSTRUCTION NOT SPECIFICALLY IDENTIFIED TO RECEIVE A CERTAIN SEED MIX SHALL BE MIXED WITH SEED MIX 25-131.
9. WHERE NEW SOD MEETS EXISTING SOD, EXISTING SOD EDGE SHALL BE CUT TO ALLOW FOR A CONSISTENT, UNIFORM STRAIGHT EDGE. JAGGED OR UNEVEN EDGES WILL NOT BE ACCEPTABLE. REMOVE TOPSOIL AT JOINT BETWEEN EXISTING AND NEW AS REQUIRED TO ALLOW NEW SOD SURFACE TO BE FLUSH WITH EXISTING.

DENSITY CALCULATION:

- DENSITY FOR R-3 ZONING: 6 UNITS/ACRE
- TOTAL ACRES: 38.42
- TOTAL UNITS: 230
- VILLA UNITS: 63
- APARTMENT UNITS: 167
- ASSUMING 2 STORY, UNDERGROUND PARKING, BUILDING EXTENTS MAY VARY.
  - LOT 2, BLOCK 1: 97 — 197 OUTDOOR STALLS
  - LOT 22, BLOCK 3: 40 — 90 OUTDOOR STALLS
  - LOT 12, BLOCK 4: 30 — 61 OUTDOOR STALLS

CALL 48 HOURS BEFORE DIGGING:
GOPHER STATE ONE CALL
TWIN CITY AREA 651-454-0002
MINNESOTA TOLL FREE 1-800-252-1166

REV NO.	DATE	DESCRIPTION
1	04/01/2025	REVISION PER CITY REVIEW
2	04/24/2025	REVISION PER CITY REVIEW

DATE: 04/24/2025
DESIGN BY: MJM
DRAWN BY: MJM
CHECKED BY: CJD
DWG FILE: SITE BASE
FILE NO.: 22-0030.00

I hereby certify that this plan, specification, or report was prepared by me or under my direct supervision and that I am a duly Licensed Professional Engineer under the laws of the State of Minnesota.

Signed: Christopher J. Dahn
Date: Lic. No. 58628

NOT FOR CONSTRUCTION

BOGART, PEDERSON & ASSOCIATES, INC.
LAND SURVEYING
CIVIL ENGINEERING
ENVIRONMENTAL SERVICES
13079 FIRST STREET, BECKER, MN 55308-9322
TEL: 763-262-9622 FAX: 763-262-9644

CEDAR RIDGE COMMUNITY LLC
CEDAR RIDGE COMMUNITY
City of North Branch, Chisago County, MN

OVERALL SITE PLAN

SHEET NO.
C2.0

N:\Projects Current\22-0030.02 Belzer North Branch Pine\Civil\CAD Files\NB Site Base.dwg 4/24/2025 3:06 PM

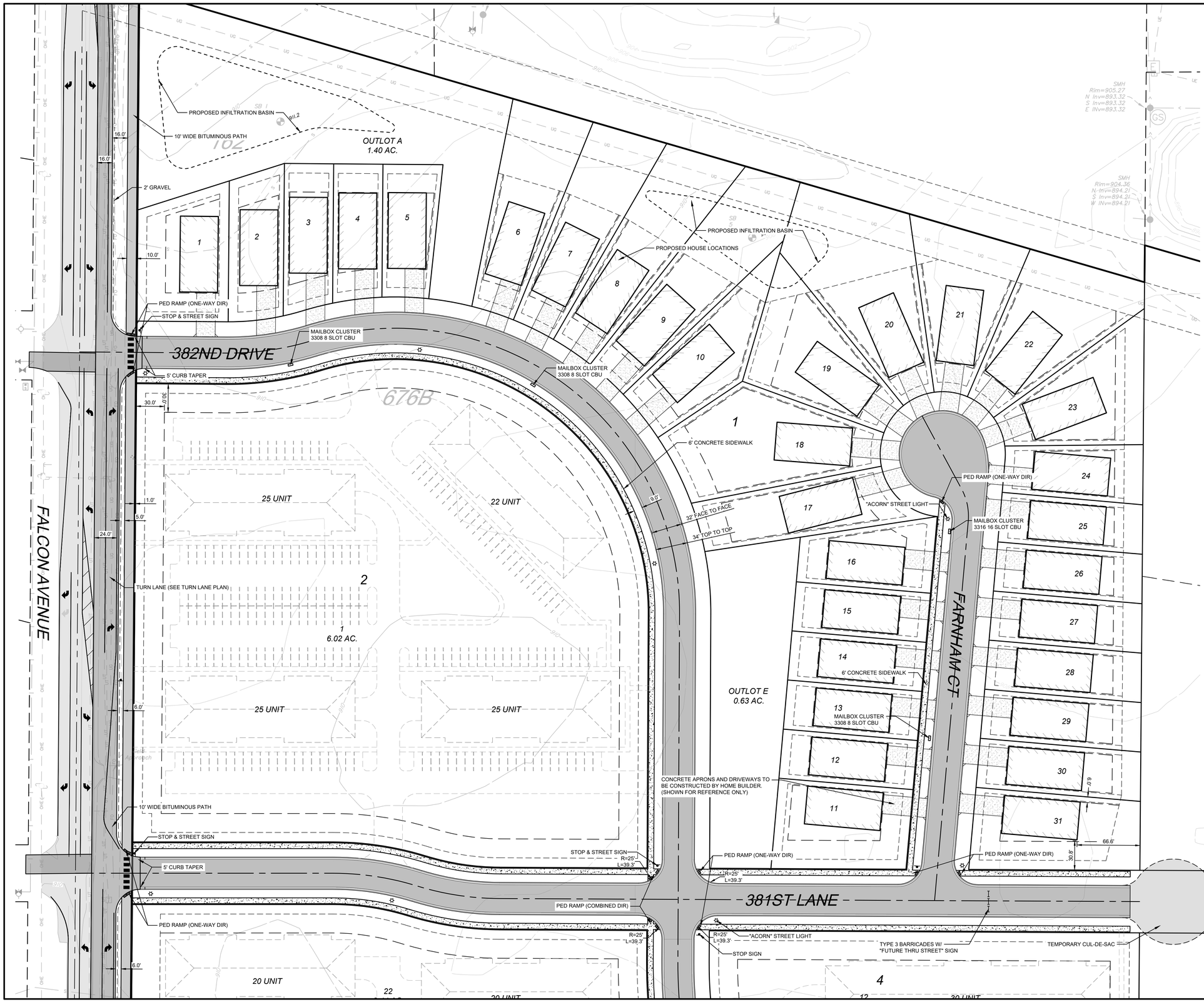

0' 50' 100'
SCALE: 1"=50'

LEGEND:

- PROPOSED ASPHALT PAVEMENT
- PROPOSED CONCRETE PAVEMENT
- MOUNTABLE CURB AND GUTTER
- PROPOSED HOUSE PAD
- PHASING LINE
- PROPOSED SIGN
- PROPOSED LIGHT POLE
- PROPOSED MAILBOX CLUSTER

SITE PLAN NOTES:

1. PAINTED PAVEMENT MARKING DIMENSIONS ARE SHOWN TO FACE OF CURB. ALL OTHER DIMENSIONS ARE SHOWN TO BACK OF CURB.
2. ALL CONCRETE RAMPS, SIDEWALKS AND ACCESSIBLE HANDICAPPED PARKING STALLS TO CONFORM TO CURRENT A.D.A. REQUIREMENTS.
3. CONTRACTOR SHALL FIELD VERIFY HORIZONTAL AND VERTICAL LOCATION OF EXISTING UTILITIES PRIOR TO START OF CONSTRUCTION.
4. CONTRACTOR SHALL INSTALL EROSION CONTROL MEASURES PRIOR TO THE START OF CONSTRUCTION.
5. CONSTRUCTION SHALL BE IN ACCORDANCE WITH APPLICABLE CITY, COUNTY AND STATE REGULATIONS.
6. SITE SHALL BE CONSTRUCTED IN ACCORDANCE WITH THE PLANS APPROVED BY THE CITY.
7. LANDSCAPING AND TURF ESTABLISHMENT PER LANDSCAPE PLANS & SPECIFICATIONS.
8. ALL DISTURBED AREAS OUTSIDE THE BUILDING PAD WHICH ARE NOT DESIGNATED TO BE PAVED OR RECEIVE AGLIME, SHALL RECEIVE AT LEAST 6" OF TOPSOIL AND SHALL BE SEEDED OR SODDED. REFER TO THE EROSION CONTROL PLAN FOR SOD AND SEED LOCATIONS. ALL OTHER AREAS DISTURBED BY CONSTRUCTION NOT SPECIFICALLY IDENTIFIED TO RECEIVE A CERTAIN SEED MIX SHALL BE MIXED WITH SEED MIX 25-131.
9. WHERE NEW SOD MEETS EXISTING SOD, EXISTING SOD EDGE SHALL BE CUT TO ALLOW FOR A CONSISTENT, UNIFORM STRAIGHT EDGE. JAGGED OR UNEVEN EDGES WILL NOT BE ACCEPTABLE. REMOVE TOPSOIL AT JOINT BETWEEN EXISTING AND NEW AS REQUIRED TO ALLOW NEW SOD SURFACE TO BE FLUSH WITH EXISTING.

CALL 48 HOURS BEFORE DIGGING:
GOPHER STATE ONE CALL
TWIN CITY AREA 651-454-0002
MINNESOTA TOLL FREE 1-800-252-1166

REV NO.	DATE	DESCRIPTION
1	04/01/2025	REVISION PER CITY REVIEW
2	04/24/2025	REVISION PER CITY REVIEW

DATE: 04/24/2025
DESIGN BY: MJM
DRAWN BY: MJM
CHECKED BY: CJD
DWG FILE: SITE BASE
FILE NO.: 22-0030.00

I hereby certify that this plan, specification, or report was prepared by me or under my direct supervision and that I am a duly Licensed Professional Engineer under the laws of the State of Minnesota.

NOT FOR CONSTRUCTION

Signed: Christopher J. Dahn
Date: Lic. No. 58628

BOGART, PEDERSON & ASSOCIATES, INC.
LAND SURVEYING
CIVIL ENGINEERING
ENVIRONMENTAL SERVICES
13079 FIRST STREET, BECKER, MN 55308-9322
TEL: 763-262-3822 FAX: 763-262-3844

CEDAR RIDGE COMMUNITY LLC
CEDAR RIDGE COMMUNITY
City of North Branch, Chisago County, MN

NORTH SITE PLAN

SHEET NO.
C2.1

N:\Projects Current\22-0030.00 Belcher North Branch Plat\Civil\CAD Files\NB Site Base.dwg
4/24/2025 3:06 PM

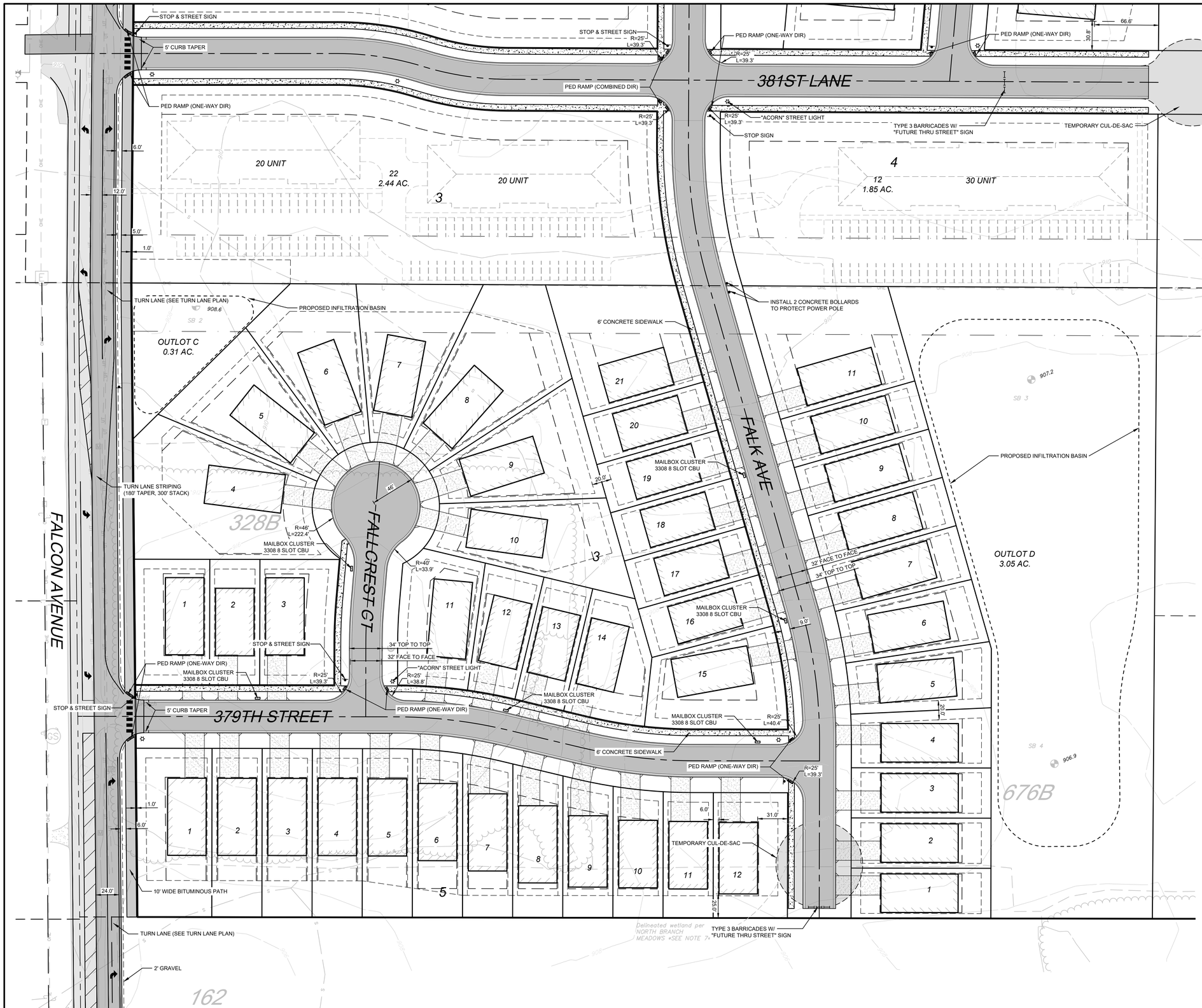

N

0' 50' 100'

SCALE: 1"=50'

LEGEND:

- PROPOSED ASPHALT PAVEMENT
- PROPOSED CONCRETE PAVEMENT
- MOUNTABLE CURB AND GUTTER
- PROPOSED HOUSE PAD
- PHASING LINE
- PROPOSED SIGN
- PROPOSED LIGHT POLE
- PROPOSED MAILBOX CLUSTER

SITE PLAN NOTES:

1. PAINTED PAVEMENT MARKING DIMENSIONS ARE SHOWN TO FACE OF CURB. ALL OTHER DIMENSIONS ARE SHOWN TO BACK OF CURB.
2. ALL CONCRETE RAMPS, SIDEWALKS AND ACCESSIBLE HANDICAPPED PARKING STALLS TO CONFORM TO CURRENT A.D.A. REQUIREMENTS.
3. CONTRACTOR SHALL FIELD VERIFY HORIZONTAL AND VERTICAL LOCATION OF EXISTING UTILITIES PRIOR TO START OF CONSTRUCTION.
4. CONTRACTOR SHALL INSTALL EROSION CONTROL MEASURES PRIOR TO THE START OF CONSTRUCTION.
5. CONSTRUCTION SHALL BE IN ACCORDANCE WITH APPLICABLE CITY, COUNTY AND STATE REGULATIONS.
6. SITE SHALL BE CONSTRUCTED IN ACCORDANCE WITH THE PLANS APPROVED BY THE CITY.
7. LANDSCAPING AND TURF ESTABLISHMENT PER LANDSCAPE PLANS & SPECIFICATIONS.
8. ALL DISTURBED AREAS OUTSIDE THE BUILDING PAD WHICH ARE NOT DESIGNATED TO BE PAVED OR RECEIVE AGLIME, SHALL RECEIVE AT LEAST 6" OF TOPSOIL AND SHALL BE SEEDED OR SODDED. REFER TO THE EROSION CONTROL PLAN FOR SOD AND SEED LOCATIONS. ALL OTHER AREAS DISTURBED BY CONSTRUCTION NOT SPECIFICALLY IDENTIFIED TO RECEIVE A CERTAIN SEED MIX SHALL BE MIXED WITH SEED MIX 25-131.
9. WHERE NEW SOD MEETS EXISTING SOD, EXISTING SOD EDGE SHALL BE CUT TO ALLOW FOR A CONSISTENT, UNIFORM STRAIGHT EDGE. JAGGED OR UNEVEN EDGES WILL NOT BE ACCEPTABLE. REMOVE TOPSOIL AT JOINT BETWEEN EXISTING AND NEW AS REQUIRED TO ALLOW NEW SOD SURFACE TO BE FLUSH WITH EXISTING.

CALL 48 HOURS BEFORE DIGGING:
GOPHER STATE ONE CALL
TWIN CITY AREA 651-454-0002
MINNESOTA TOLL FREE 1-800-252-1166

REV NO.	DATE	DESCRIPTION
1	04/01/2025	REVISION PER CITY REVIEW
2	04/24/2025	REVISION PER CITY REVIEW

DATE: 04/24/2025
DESIGN BY: MJM
DRAWN BY: MJM
CHECKED BY: CJD
DWG FILE: SITE BASE
FILE NO.: 22-0030.00

I hereby certify that this plan, specification, or report was prepared by me or under my direct supervision and that I am a duly Licensed Professional Engineer under the laws of the State of Minnesota.

NOT FOR CONSTRUCTION

Signed: Christopher J. Dahn
Date: Lic. No. 58628

BOGART, PEDERSON & ASSOCIATES, INC.
LAND SURVEYING
CIVIL ENGINEERING
ENVIRONMENTAL SERVICES
13076 FIRST STREET, BECKER, MN 55308-9322
TEL: 763-262-9322 FAX: 763-262-9344

CEDAR RIDGE COMMUNITY LLC
CEDAR RIDGE COMMUNITY
City of North Branch, Chisago County, MN

SOUTH SITE PLAN

SHEET NO.
C2.2

N:\Projects Current\22-0030.02 Belzer North Branch\Part\Civil\CAD Files\NB Site Base.dwg
4/24/2025 3:06 PM

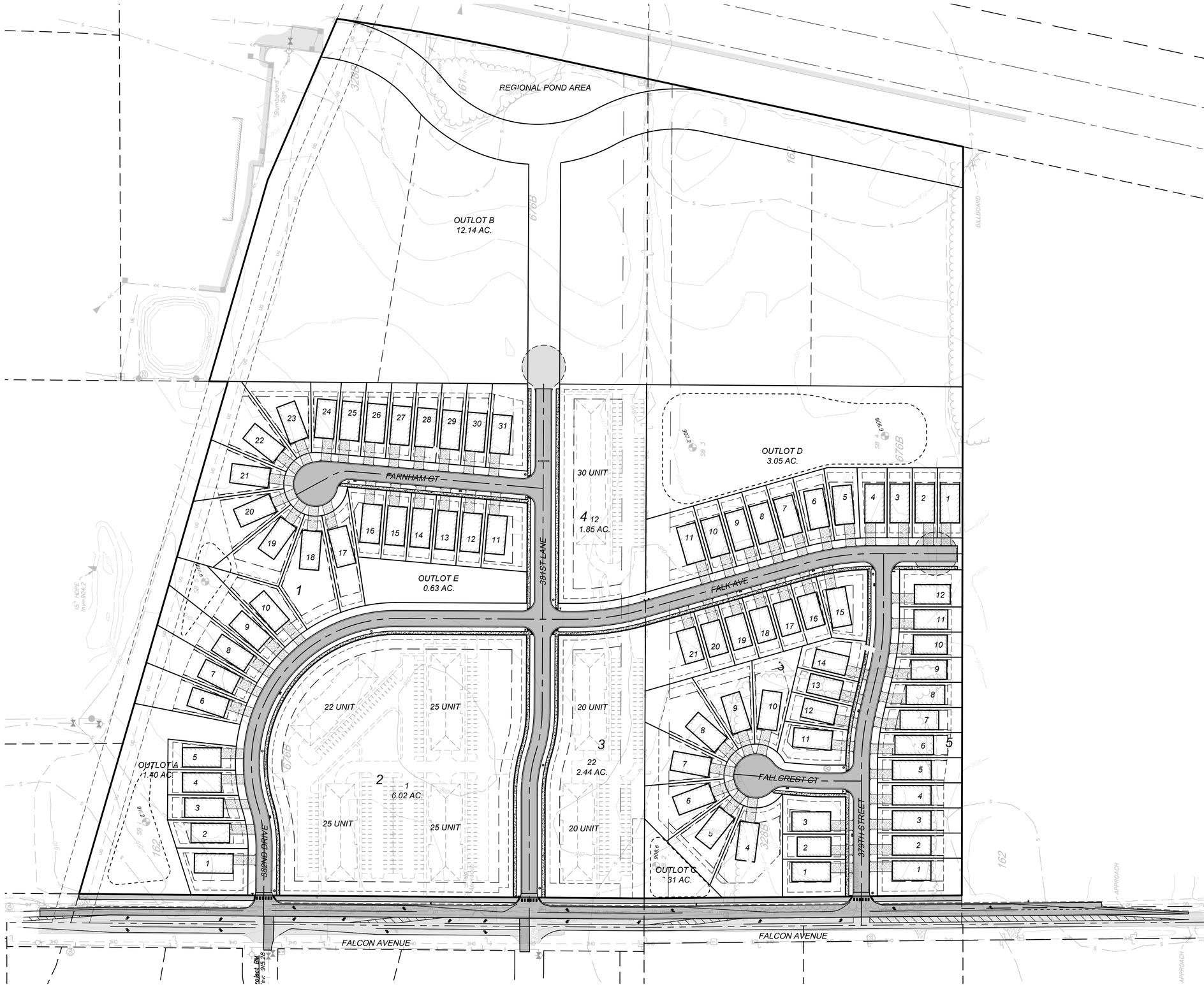

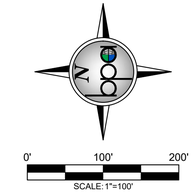

LEGEND:

- PROPOSED ASPHALT PAVEMENT
- PROPOSED CONCRETE PAVEMENT
- MOUNTABLE CURB AND GUTTER
- PROPOSED HOUSE PAD
- PHASING LINE
- PROPOSED SIGN
- PROPOSED LIGHT POLE
- PROPOSED MAILBOX CLUSTER

SITE PLAN NOTES:

1. PAINTED PAVEMENT MARKING DIMENSIONS ARE SHOWN TO FACE OF CURB. ALL OTHER DIMENSIONS ARE SHOWN TO BACK OF CURB.
2. ALL CONCRETE RAMPS, SIDEWALKS AND ACCESSIBLE HANDICAPPED PARKING STALLS TO CONFORM TO CURRENT A.D.A. REQUIREMENTS.
3. CONTRACTOR SHALL FIELD VERIFY HORIZONTAL AND VERTICAL LOCATION OF EXISTING UTILITIES PRIOR TO START OF CONSTRUCTION.
4. CONTRACTOR SHALL INSTALL EROSION CONTROL MEASURES PRIOR TO THE START OF CONSTRUCTION.
5. CONSTRUCTION SHALL BE IN ACCORDANCE WITH APPLICABLE CITY, COUNTY AND STATE REGULATIONS.
6. SITE SHALL BE CONSTRUCTED IN ACCORDANCE WITH THE PLANS APPROVED BY THE CITY.
7. LANDSCAPING AND TURF ESTABLISHMENT PER LANDSCAPE PLANS & SPECIFICATIONS.
8. ALL DISTURBED AREAS OUTSIDE THE BUILDING PAD WHICH ARE NOT DESIGNATED TO BE PAVED OR RECEIVE AGLIME, SHALL RECEIVE AT LEAST 6" OF TOPSOIL AND SHALL BE SEEDED OR SODDED. REFER TO THE EROSION CONTROL PLAN FOR SOD AND SEED LOCATIONS. ALL OTHER AREAS DISTURBED BY CONSTRUCTION NOT SPECIFICALLY IDENTIFIED TO RECEIVE A CERTAIN SEED MIX SHALL BE MIXED WITH SEED MIX 25-131.
9. WHERE NEW SOD MEETS EXISTING SOD, EXISTING SOD EDGE SHALL BE CUT TO ALLOW FOR A CONSISTENT, UNIFORM STRAIGHT EDGE. JAGGED OR UNEVEN EDGES WILL NOT BE ACCEPTABLE. REMOVE TOPSOIL AT JOINT BETWEEN EXISTING AND NEW AS REQUIRED TO ALLOW NEW SOD SURFACE TO BE FLUSH WITH EXISTING.

DENSITY CALCULATION:

- DENSITY FOR R-3 ZONING: 6 UNITS/ACRE
- TOTAL ACRES: 38.42
- TOTAL UNITS: 230
- VILLA UNITS: 63
- APARTMENT UNITS: 167
- ASSUMING 2 STORY, UNDERGROUND PARKING, BUILDING EXTENTS MAY VARY.
  - LOT 2, BLOCK 1: 97 — 197 OUTDOOR STALLS
  - LOT 22, BLOCK 3: 40 — 90 OUTDOOR STALLS
  - LOT 12, BLOCK 4: 30 — 61 OUTDOOR STALLS

CALL 48 HOURS BEFORE DIGGING:
GOPHER STATE ONE CALL
TWIN CITY AREA 651-454-0002
MINNESOTA TOLL FREE 1-800-252-1166

REV NO.	DATE	DESCRIPTION
1	04/01/2025	REVISION PER CITY REVIEW
2	04/24/2025	REVISION PER CITY REVIEW

DATE: 04/24/2025
DESIGN BY: MJM
DRAWN BY: MJM
CHECKED BY: CJD
DWG FILE: SITE BASE
FILE NO.: 22-0030.00

I hereby certify that this plan, specification, or report was prepared by me or under my direct supervision and that I am a duly Licensed Professional Engineer under the laws of the State of Minnesota.

NOT FOR CONSTRUCTION

Signed: Christopher J. Dahn
Date: Lic. No. 58628

BOGART, PEDERSON & ASSOCIATES, INC.
LAND SURVEYING
CIVIL ENGINEERING
ENVIRONMENTAL SERVICES
13076 FIRST STREET, BECKER, MN 55308-9322
TEL: 763-262-9622 FAX: 763-262-9644

CEDAR RIDGE COMMUNITY LLC
CEDAR RIDGE COMMUNITY
City of North Branch, Chisago County, MN

FUTURE DEVELOPMENT

SHEET NO.
C2.3

N:\Projects Current\22-0030.02 Bellaire North Branch PlatCivil\CAD Files\NB Site Base.dwg
3:06 PM
4/24/2025

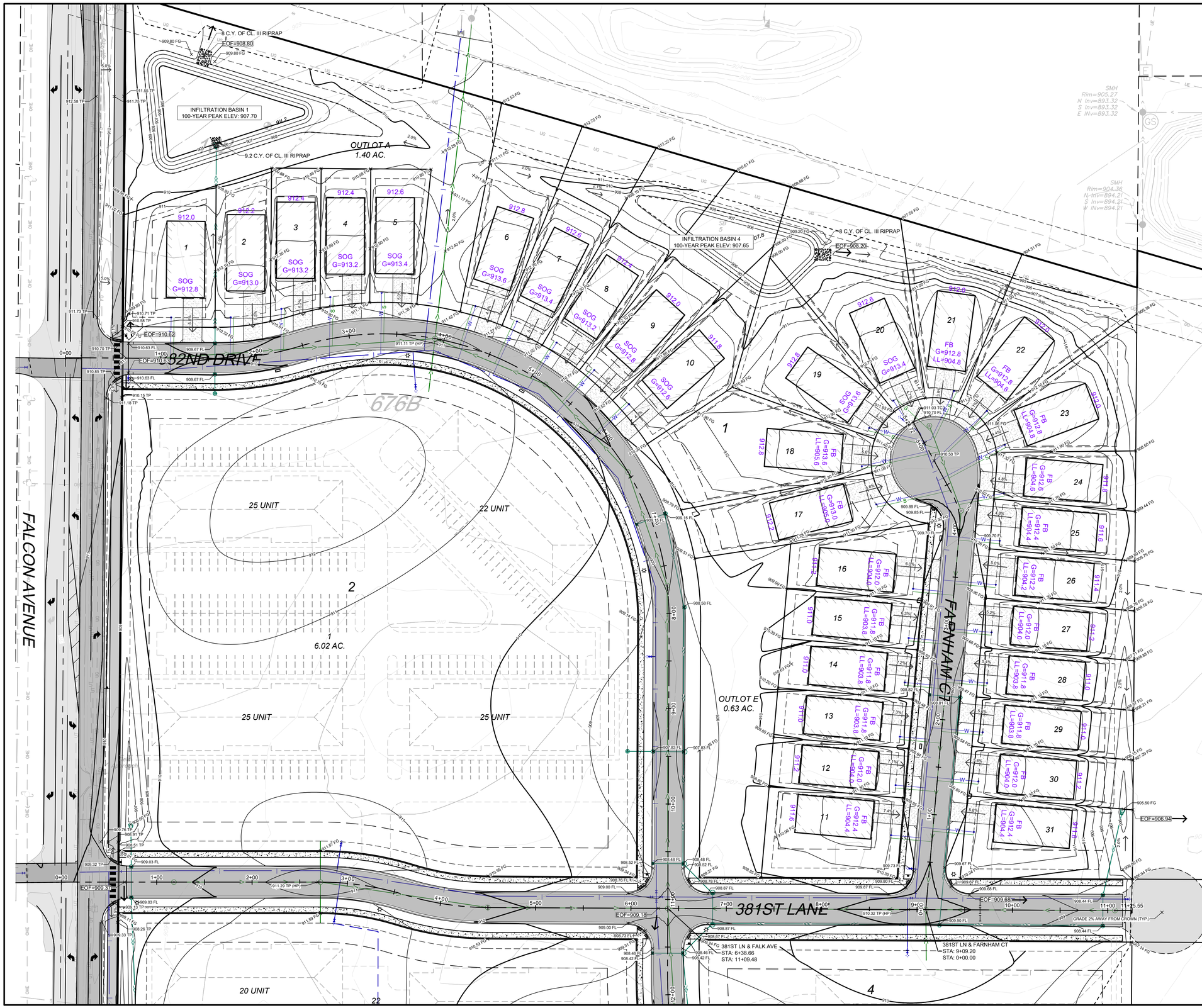

FB
G=913.0
LL=905.0

911.5

-HOUSE TYPE
-GARAGE ELEVATION
-LOWER LEVEL ELEVATION

FB: FULL BASEMENT
SOG: SLAB ON GRADE

-BACKYARD ELEVATION

GRADING GENERAL NOTES:

1. THE CONTRACTOR SHALL NOTE ANY DISCREPANCIES BETWEEN EXISTING CONDITIONS IN THE FIELD REPRESENTED WITHIN THE PLANS AS SHOWN AND ALERT THE ENGINEER BEFORE BIDDING THE PROJECT AND BEGINNING CONSTRUCTION.
2. CONTRACTOR SHALL LOCATE AND VERIFY ALL UTILITIES WHICH MAY AFFECT THIS WORK AND NOTIFY THE OWNER OF ANY CHANGES. CONTACT LOCAL UTILITY COMPANIES FOR EXACT LOCATIONS PRIOR TO BIDDING THE PROJECT AND COMMENCING WORK.
3. CONTRACTOR SHALL TAKE NECESSARY PRECAUTIONS TO PREVENT SILT AND DEBRIS RUN-OFF DURING GRADING OPERATIONS (I.E. SILT FENCE, STRAW BALES, ETC.).
4. CONTRACTOR SHALL VERIFY CRITICAL ELEVATIONS TO ENSURE CONFORMANCE WITH GRADING PLAN, PARTICULARLY WITH EXISTING STRUCTURES AND/OR PAVEMENTS TO REMAIN. MEET EXISTING GRADES ALONG STREETS, PROPERTY LINES, AND DRIVEWAY ENTRANCES. RESTORE ALL PAVEMENTS THAT REMAIN TO THEIR ORIGINAL IF NOT BETTER CONDITION. NOTIFY OWNER OF ANY CONFLICTS PRIOR TO BIDDING THE PROJECT.
5. TURF ESTABLISHMENT AREAS SHALL RECEIVE MINIMUM OF 4" DEPTH AS MEASURED IN PLACE OF TOPSOIL. TOPSOIL SHALL BE FURNISHED AND INSTALLED BY THE CONTRACTOR. ALL GRADED SLOPES GREATER THAN OR EQUAL TO 5:1 SHALL BE HYDROSEEDED, EROSION CONTROL BLANKETED, OR MULCHED TO HELP STABILIZE THE SLOPES BY GENERAL CONTRACTOR.
6. PROPOSED SPOT ELEVATIONS ARE TO THE TOP OF CURB UNLESS NOTED OTHERWISE. ELEVATION OF FLOW LINE IS 6" BELOW TOP OF CURB UNLESS OTHERWISE SHOWN.
7. CONTRACTOR SHALL BE SOLELY RESPONSIBLE FOR DETERMINING QUANTITIES OF CUT, FILL AND WASTE MATERIALS TO BE HANDLED, AND FOR AMOUNT OF GRADING TO BE DONE IN ORDER TO COMPLETELY PERFORM ALL WORK INDICATED ON THE DRAWINGS. IMPORT SUITABLE MATERIAL AND EXPORT UNSUITABLE / EXCESS / WASTE MATERIAL AS REQUIRED. ALL COSTS ASSOCIATED WITH IMPORTING AND EXPORTING MATERIALS SHALL BE INCIDENTAL TO THE CONTRACT.
8. IT IS INTENDED THAT EARTHWORK (CUT VS. FILL) WILL NOT BALANCE ON SITE. THE CONTRACTOR SHALL SUBMIT THE QUANTITY OF MATERIAL AND AMOUNT OF ANTICIPATED GRADE ADJUSTMENT FOR REVIEW BY THE ENGINEER A MINIMUM OF FOUR WEEKDAYS PRIOR TO MAKING ADJUSTMENTS. ALL GRADE ADJUSTMENTS MUST BE APPROVED BY THE ENGINEER. NO ADDITIONAL COMPENSATION SHALL BE ALLOWED FOR WORK ASSOCIATED WITH GRADING ADJUSTMENTS, INCLUDING, BUT NOT LIMITED TO, EARTHWORK OPERATIONS, STORM SEWER PIPING AND STRUCTURE ADJUSTMENTS, CONSTRUCTION SURVEYING FOR ADJUSTING FEATURE LOCATIONS ACCORDINGLY, SILT FENCE, ETC.
9. FAILURE OF TURF DEVELOPMENT: IN THE EVENT THE CONTRACTOR FAILS TO PROVIDE AN ACCEPTABLE TURF, THE CONTRACTOR SHALL RE-SEED OR RE-SOD ALL APPLICABLE AREAS, AT NO ADDITIONAL COST TO THE OWNER, TO THE SATISFACTION OF THE ENGINEER.
10. ANY MANHOLE, CATCH BASIN, STORM SEWER, SANITARY SEWER, DRAINTILE, OR OTHER POTENTIAL SOURCE FOR CONTAMINATION SHALL BE INSTALLED AT LEAST 10 FEET HORIZONTALLY FROM ANY WATERMAIN PER MINNESOTA PLUMBING CODE. THIS ISOLATION DISTANCE SHALL BE MEASURED FROM THE OUTER EDGE OF THE PIPE TO THE OUTER EDGE OF THE CONTAMINATION SOURCE (OUTER EDGE OF STRUCTURES OR PIPING OR SIMILAR)
11. CONTRACTOR SHALL MAINTAIN DRAINAGE FROM EXISTING BUILDING AT ALL TIMES. PROVIDE TEMPORARY STORM SEWER (INCLUDING, BUT NOT LIMITED TO, CATCH BASINS, MANHOLES, PIPING, ETC.) AS REQUIRED. EXISTING STORM SEWER SHALL NOT BE REMOVED UNTIL TEMPORARY OR PERMANENT STORM SEWER IS INSTALLED AND FUNCTIONAL. COORDINATE ALL REMOVALS WITH APPROPRIATE TRADES (SITE UTILITY CONTRACTOR, MECHANICAL CONTRACTOR, ETC.) AS REQUIRED.
12. ALL GRADING AND CONSTRUCTION IN THE SMALL UTILITY EASEMENTS WILL NEED TO BE APPROVED AND COORDINATED WITH THE UTILITY PROVIDER.

REV NO.	DATE	DESCRIPTION
1	04/01/2025	REVISION PER CITY REVIEW
2	04/24/2025	REVISION PER CITY REVIEW

DATE: 04/24/2025
DESIGN BY: MJM
DRAWN BY: MJM
CHECKED BY: CJD
DWG FILE: GRADING
FILE NO.: 22-0030.00

I hereby certify that this plan, specification, or report was prepared by me or under my direct supervision and that I am a duly Licensed Professional Engineer under the laws of the State of Minnesota.

NOT FOR CONSTRUCTION

Signed: Christopher J. Dahn
Date: Lic. No. 58628

BOGART, PEDERSON & ASSOCIATES, INC.
LAND SURVEYING
CIVIL ENGINEERING
ENVIRONMENTAL SERVICES
12076 FIRST STREET, BECKER, MN 55308-9322
TEL: 763-262-3822 FAX: 763-262-3844

CEDAR RIDGE COMMUNITY LLC
CEDAR RIDGE COMMUNITY
City of North Branch, Chisago County, MN

NORTH GRADING PLAN

SHEET NO.
C3.1

LEGEND:

	PROPOSED RIP RAP
980.50 TC	NEW TOP-BACK OF CURB ELEVATION
980.50 FL	NEW FLOW LINE OF CURB ELEVATION
980.50 SW	NEW SIDEWALK ELEVATION
980.50 TP	NEW TOP OF PAVEMENT ELEVATION
980.50 FG	NEW FINISHED GRADE ELEVATION
980.50 EX	EXISTING ELEVATION
984	PROPOSED CONTOUR
	PROPOSED SLOPE
E.O.F.	EMERGENCY OVERFLOW
	PHASING LINE

FB
G=913.0
LL=905.0
911.5

-HOUSE TYPE
-GARAGE ELEVATION
-LOWER LEVEL ELEVATION

FB: FULL BASEMENT
SOG: SLAB ON GRADE

-BACKYARD ELEVATION

GRADING GENERAL NOTES:

1. THE CONTRACTOR SHALL NOTE ANY DISCREPANCIES BETWEEN EXISTING CONDITIONS IN THE FIELD REPRESENTED WITHIN THE PLANS AS SHOWN AND ALERT THE ENGINEER BEFORE BIDDING THE PROJECT AND BEGINNING CONSTRUCTION.
2. CONTRACTOR SHALL LOCATE AND VERIFY ALL UTILITIES WHICH MAY AFFECT THIS WORK AND NOTIFY THE OWNER OF ANY CHANGES. CONTACT LOCAL UTILITY COMPANIES FOR EXACT LOCATIONS PRIOR TO BIDDING THE PROJECT AND COMMENCING WORK.
3. CONTRACTOR SHALL TAKE NECESSARY PRECAUTIONS TO PREVENT SILT AND DEBRIS RUN-OFF DURING GRADING OPERATIONS (I.E. SILT FENCE, STRAW BALES, ETC.).
4. CONTRACTOR SHALL VERIFY CRITICAL ELEVATIONS TO ENSURE CONFORMANCE WITH GRADING PLAN, PARTICULARLY WITH EXISTING STRUCTURES AND/OR PAVEMENTS TO REMAIN. MEET EXISTING GRADES ALONG STREETS, PROPERTY LINES, AND DRIVEWAY ENTRANCES. RESTORE ALL PAVEMENTS THAT REMAIN TO THEIR ORIGINAL IF NOT BETTER CONDITION. NOTIFY OWNER OF ANY CONFLICTS PRIOR TO BIDDING THE PROJECT.
5. TURF ESTABLISHMENT AREAS SHALL RECEIVE MINIMUM OF 4" DEPTH AS MEASURED IN PLACE OF TOPSOIL. TOPSOIL SHALL BE FURNISHED AND INSTALLED BY THE CONTRACTOR. ALL GRADED SLOPES GREATER THAN OR EQUAL TO 5:1 SHALL BE HYDROSEEDED, EROSION CONTROL BLANKETED, OR MULCHED TO HELP STABILIZE THE SLOPES BY GENERAL CONTRACTOR.
6. PROPOSED SPOT ELEVATIONS ARE TO THE TOP OF CURB UNLESS NOTED OTHERWISE. ELEVATION OF FLOW LINE IS 6" BELOW TOP OF CURB UNLESS OTHERWISE SHOWN.
7. CONTRACTOR SHALL BE SOLELY RESPONSIBLE FOR DETERMINING QUANTITIES OF CUT, FILL AND WASTE MATERIALS TO BE HANDLED, AND FOR AMOUNT OF GRADING TO BE DONE IN ORDER TO COMPLETELY PERFORM ALL WORK INDICATED ON THE DRAWINGS. IMPORT SUITABLE MATERIAL AND EXPORT UNSUITABLE / EXCESS / WASTE MATERIAL AS REQUIRED. ALL COSTS ASSOCIATED WITH IMPORTING AND EXPORTING MATERIALS SHALL BE INCIDENTAL TO THE CONTRACT.
8. IT IS INTENDED THAT EARTHWORK (CUT VS. FILL) WILL NOT BALANCE ON SITE. THE CONTRACTOR SHALL SUBMIT THE QUANTITY OF MATERIAL AND AMOUNT OF ANTICIPATED GRADE ADJUSTMENT FOR REVIEW BY THE ENGINEER A MINIMUM OF FOUR WEEKDAYS PRIOR TO MAKING ADJUSTMENTS. ALL GRADE ADJUSTMENTS MUST BE APPROVED BY THE ENGINEER. NO ADDITIONAL COMPENSATION SHALL BE ALLOWED FOR WORK ASSOCIATED WITH GRADING ADJUSTMENTS, INCLUDING, BUT NOT LIMITED TO, EARTHWORK OPERATIONS, STORM SEWER PIPING AND STRUCTURE ADJUSTMENTS, CONSTRUCTION SURVEYING FOR ADJUSTING FEATURE LOCATIONS ACCORDINGLY, SILT FENCE, ETC.
9. FAILURE OF TURF DEVELOPMENT: IN THE EVENT THE CONTRACTOR FAILS TO PROVIDE AN ACCEPTABLE TURF, THE CONTRACTOR SHALL RE-SEED OR RE-SOD ALL APPLICABLE AREAS, AT NO ADDITIONAL COST TO THE OWNER, TO THE SATISFACTION OF THE ENGINEER.
10. ANY MANHOLE, CATCH BASIN, STORM SEWER, SANITARY SEWER, DRAINTILE, OR OTHER POTENTIAL SOURCE FOR CONTAMINATION SHALL BE INSTALLED AT LEAST 10 FEET HORIZONTALLY FROM ANY WATERMAIN PER MINNESOTA PLUMBING CODE. THIS ISOLATION DISTANCE SHALL BE MEASURED FROM THE OUTER EDGE OF THE PIPE TO THE OUTER EDGE OF THE CONTAMINATION SOURCE (OUTER EDGE OF STRUCTURES OR PIPING OR SIMILAR)
11. CONTRACTOR SHALL MAINTAIN DRAINAGE FROM EXISTING BUILDING AT ALL TIMES. PROVIDE TEMPORARY STORM SEWER (INCLUDING, BUT NOT LIMITED TO, CATCH BASINS, MANHOLES, PIPING, ETC.) AS REQUIRED. EXISTING STORM SEWER SHALL NOT BE REMOVED UNTIL TEMPORARY OR PERMANENT STORM SEWER IS INSTALLED AND FUNCTIONAL. COORDINATE ALL REMOVALS WITH APPROPRIATE TRADES (SITE UTILITY CONTRACTOR, MECHANICAL CONTRACTOR, ETC.) AS REQUIRED.
12. ALL GRADING AND CONSTRUCTION IN THE SMALL UTILITY EASEMENTS WILL NEED TO BE APPROVED AND COORDINATED WITH THE UTILITY PROVIDER.

SCALE: 1"=50'

REV NO.	DATE	DESCRIPTION
1	04/01/2025	REVISION PER CITY REVIEW
2	04/24/2025	REVISION PER CITY REVIEW

DATE: 04/24/2025
DESIGN BY: M.J.M
DRAWN BY: M.J.M
CHECKED BY: C.J.D
DWG FILE: GRADING
FILE NO.: 22-0030.00

I hereby certify that this plan, specification, or report was prepared by me or under my direct supervision and that I am a duly Licensed Professional Engineer under the laws of the State of Minnesota.

Signed: Christopher J. Dahn
Date: Lic. No. 58628

NOT FOR CONSTRUCTION

BOGART, PEDERSON & ASSOCIATES, INC.
LAND SURVEYING
CIVIL ENGINEERING
ENVIRONMENTAL SERVICES
13076 FIRST STREET, BECKER, MN 55308-9322
TEL: 763-262-3822 FAX: 763-262-3844

CEDAR RIDGE COMMUNITY LLC
CEDAR RIDGE COMMUNITY
City of North Branch, Chisago County, MN

SOUTH GRADING PLAN

SHEET NO.
C3.2

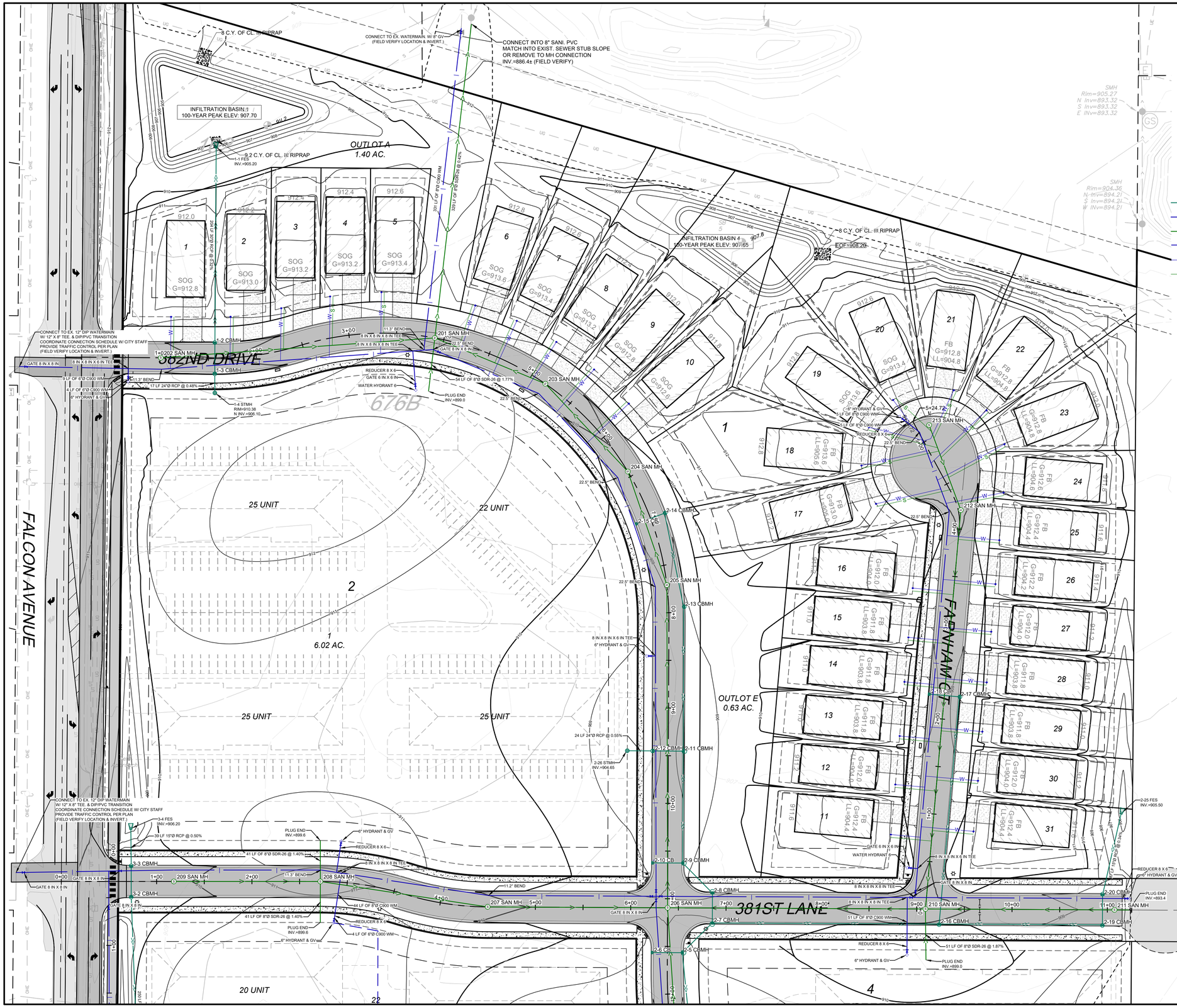

LEGEND:

- PROPOSED STORM SEWER
- PROPOSED WATER LINE
- PROPOSED SANITARY SEWER
- PROPOSED FITTING
- PROPOSED WATER SERVICE
- PROPOSED SANITARY SERVICE
- PROPOSED SANITARY MANHOLE
- PROPOSED FLARED END SECITON
- PROPOSED STORM MANHOLE
- PROPOSED CATCH BASIN
- PROPOSED GATE VALVE & BOX
- PROPOSED HYDRANT
- PROPOSED CLEANOUT
- PROPOSED RIP RAP
- PHASING LINE

UTILITY GENERAL NOTES:

1. CONTRACTOR SHALL BE RESPONSIBLE FOR COORDINATING ALL UTILITY RELOCATIONS.
2. CONTRACTOR SHALL LOCATE AND VERIFY ALL UTILITIES WHICH MAY AFFECT THIS WORK AND NOTIFY OWNER OF ANY CHANGES. CONTACT LOCAL UTILITY COMPANIES FOR EXACT LOCATIONS PRIOR TO BIDDING THE PROJECT AND COMMENCING WORK.
3. CONTRACTOR SHALL VERIFY CRITICAL ELEVATIONS TO ENSURE CONFORMANCE WITH GRADING PLAN AND EXISTING UTILITIES, PARTICULARLY WITH EXISTING STRUCTURES AND/OR PAVEMENTS TO REMAIN.
4. THE CONTRACTOR SHALL NOTE ANY DISCREPANCIES BETWEEN EXISTING CONDITIONS AS EXISTING IN THE FIELD AND AS REPRESENTED WITHIN THE PLANS AS SHOWN AND ALERT THE ENGINEER BEFORE BIDDING THE PROJECT AND BEGINNING CONSTRUCTION.
5. WATER LINE TO MINIMUM 8.0 FEET DEPTH.
6. VERIFY INVERT ELEVATIONS OF EXISTING SANITARY LINE AT POINT OF CONNECTION WITH NEW SANITARY LINE PRIOR TO INSTALLING ANY NEW UTILITIES.
7. ALL CROSSING ELEVATIONS OF NEW UTILITIES & SIZES OF THE EXISTING UTILITIES ARE BASED ON ASSUMED ELEVATIONS AND SIZES PROVIDED BY THE SURVEY.
8. ALL SANITARY SERVICE PIPE AND FITTINGS WILL BE SCHDULE 40.
9. ALL STORM SEWER SHALL BE PVC SCHEDULE 40 WHEN LESS THAN 8" IN DIAMETER. ALL RCP STORM SEWER SHALL BE CLASS V PIPE UNLESS OTHERWISE NOTED. ALL HDPE STORM SEWER SHALL BE DUAL WALL HIGH PERFORMANCE POLYPROPYLENE PIPE AND SHALL CONFORM TO AASHTO M330.
10. ALL WATER LINES 4" OR GREATER SHALL CONFORM TO AWWA C900 OR GRADE PE-3408 OR GRADE PE4710 PIPE AND SHALL BE RATED FOR 200 PSI. ALL WATER LINES LESS THAT 4" SHALL CONFORM TO AWWA C901 SIDR 7 (HDPE WATER LINE) OR TYPE K COPPER PIPE.
11. THE CONTRACTOR SHALL BE RESPONSIBLE FOR OBTAINING TWO CONSECUTIVE PASSING BACTERIOLOGICAL TESTS FROM THE PROPOSED WATER SERVICE.
12. THE APPLICANT SHALL BE RESPONSIBLE FOR REPLACING ANY CONCRETE PAVEMENT WHICH IS DAMAGED OR REMOVED AS A RESULT OF THE PROPOSED WATER, SANITARY, STORM SEWER SERVICE INSTALLATION.
13. IF DEWATERING IS REQUIRED FOR THIS PROJECT, THE PUMP DISCHARGE SHALL BE TREATED PRIOR TO BEING DISCHARGED OFF-SITE OR INTO A SURFACE WATER. THE DISCHARGE SHALL BE VISUALLY CHECKED TO ENSURE THAT IT IS VISIBLY CLEAN WATER. NO DEWATERING IS EXPECTED FOR THIS SITE DUE TO SANDY SOIL CONDITIONS.
14. ALL EXISTING CASTINGS FOR SANITARY SEWER AND STORM STRUCTURES WITHIN PROPOSED WORK AREAS THAT ARE WITHIN THE CITY RIGHT OF WAY WILL BE REPLACED WITH TYPE A OR TYPE E CASTINGS AS SHOWN ON APPLICABLE CITY STD. PLATE STRT-14. ALL ADJUSTING RINGS WILL BE REPLACED WITH HDPE ADJUSTING RINGS.
15. CONTRACTOR SHALL PROVIDE TRAFFIC CONTROL PLAN FOR PAVEMENT REMOVAL, UTILITY INSTALLATION, AND REPLACEMENT AS NEEDED.
16. SANITARY SERVICE RISER PIPE SHALL BE OUTSIDE OF THE ROAD RIGHT OF WAY. RISERS SHALL BE PLACED ON THE PROPERTY LINE IF REQUIRED. SEE DETAIL SAN-001.

REV NO.	DATE	DESCRIPTION
1	04/01/2025	REVISION PER CITY REVIEW
2	04/24/2025	REVISION PER CITY REVIEW

DATE: 04/24/2025
DESIGN BY: MJM
DRAWN BY: MJM
CHECKED BY: CJD
DWG FILE: UTILITY
FILE NO.: 22-0030.00

I hereby certify that this plan, specification, or report was prepared by me or under my direct supervision and that I am a duly Licensed Professional Engineer under the laws of the State of Minnesota.

NOT FOR CONSTRUCTION

Signed: Christopher J. Dahn
Date: Lic. No. 58628

BOGART, PEDERSON & ASSOCIATES, INC.
LAND SURVEYING
CIVIL ENGINEERING
ENVIRONMENTAL SERVICES
13076 FIRST STREET, BECKER, MN 55308-9322
TEL. 763-262-9222 FAX: 763-262-9844

CEDAR RIDGE COMMUNITY LLC
CEDAR RIDGE COMMUNITY
City of North Branch, Chisago County, MN

NORTH UTILITY PLAN

SHEET NO.
C4.1

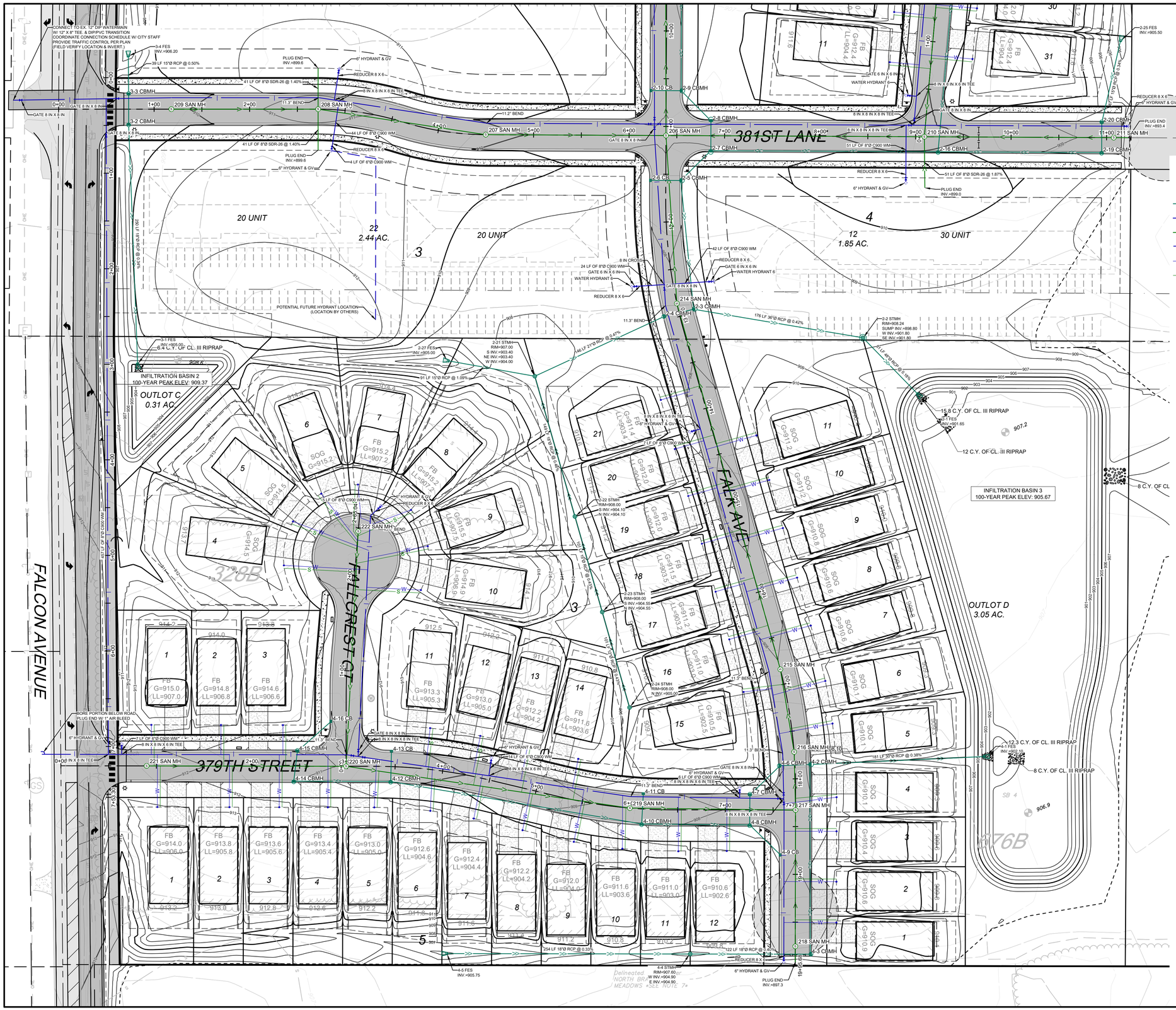

LEGEND:

- PROPOSED STORM SEWER
- PROPOSED WATER LINE
- PROPOSED SANITARY SEWER
- PROPOSED FITTING
- PROPOSED WATER SERVICE
- PROPOSED SANITARY SERVICE
- PROPOSED SANITARY MANHOLE
- PROPOSED FLARED END SECITON
- PROPOSED STORM MANHOLE
- PROPOSED CATCH BASIN
- PROPOSED GATE VALVE & BOX
- PROPOSED HYDRANT
- PROPOSED CLEANOUT
- PROPOSED RIP RAP
- PHASING LINE

UTILITY GENERAL NOTES:

1. CONTRACTOR SHALL BE RESPONSIBLE FOR COORDINATING ALL UTILITY RELOCATIONS.
2. CONTRACTOR SHALL LOCATE AND VERIFY ALL UTILITIES WHICH MAY AFFECT THIS WORK AND NOTIFY OWNER OF ANY CHANGES. CONTACT LOCAL UTILITY COMPANIES FOR EXACT LOCATIONS PRIOR TO BIDDING THE PROJECT AND COMMENCING WORK.
3. CONTRACTOR SHALL VERIFY CRITICAL ELEVATIONS TO ENSURE CONFORMANCE WITH GRADING PLAN AND EXISTING UTILITIES, PARTICULARLY WITH EXISTING STRUCTURES AND/OR PAVEMENTS TO REMAIN.
4. THE CONTRACTOR SHALL NOTE ANY DISCREPANCIES BETWEEN EXISTING CONDITIONS AS EXISTING IN THE FIELD AND AS REPRESENTED WITHIN THE PLANS AS SHOWN AND ALERT THE ENGINEER BEFORE BIDDING THE PROJECT AND BEGINNING CONSTRUCTION.
5. WATER LINE TO MINIMUM 8.0 FEET DEPTH.
6. VERIFY INVERT ELEVATIONS OF EXISTING SANITARY LINE AT POINT OF CONNECTION WITH NEW SANITARY LINE PRIOR TO INSTALLING ANY NEW UTILITIES.
7. ALL CROSSING ELEVATIONS OF NEW UTILITIES & SIZES OF THE EXISTING UTILITIES ARE BASED ON ASSUMED ELEVATIONS AND SIZES PROVIDED BY THE SURVEY.
8. ALL SANITARY SERVICE PIPE AND FITTINGS WILL BE SCHDULE 40.
9. ALL STORM SEWER SHALL BE PVC SCHEDULE 40 WHEN LESS THAN 8" IN DIAMETER. ALL RCP STORM SEWER SHALL BE CLASS V PIPE UNLESS OTHERWISE NOTED. ALL HDPE STORM SEWER SHALL BE DUAL WALL HIGH PERFORMANCE POLYPROPYLENE PIPE AND SHALL CONFORM TO AASHTO M330.
10. ALL WATER LINES 4" OR GREATER SHALL CONFORM TO AWWA C900 OR GRADE PE-3408 OR GRADE PE4710 PIPE AND SHALL BE RATED FOR 200 PSI. ALL WATER LINES LESS THAT 4" SHALL CONFORM TO AWWA C901 SIDR 7 (HDPE WATER LINE) OR TYPE K COPPER PIPE.
11. THE CONTRACTOR SHALL BE RESPONSIBLE FOR OBTAINING TWO CONSECUTIVE PASSING BACTERIOLOGICAL TESTS FROM THE PROPOSED WATER SERVICE.
12. THE APPLICANT SHALL BE RESPONSIBLE FOR REPLACING ANY CONCRETE PAVEMENT WHICH IS DAMAGED OR REMOVED AS A RESULT OF THE PROPOSED WATER, SANITARY, STORM SEWER SERVICE INSTALLATION.
13. IF DEWATERING IS REQUIRED FOR THIS PROJECT, THE PUMP DISCHARGE SHALL BE TREATED PRIOR TO BEING DISCHARGED OFF-SITE OR INTO A SURFACE WATER. THE DISCHARGE SHALL BE VISUALLY CHECKED TO ENSURE THAT IT IS VISIBLY CLEAN WATER. NO DEWATERING IS EXPECTED FOR THIS SITE DUE TO SANDY SOIL CONDITIONS.
14. ALL EXISTING CASTINGS FOR SANITARY SEWER AND STORM STRUCTURES WITHIN PROPOSED WORK AREAS THAT ARE WITHIN THE CITY RIGHT OF WAY WILL BE REPLACED WITH TYPE A OR TYPE E CASTINGS AS SHOWN ON APPLICABLE CITY STD. PLATE STRT-14. ALL ADJUSTING RINGS WILL BE REPLACED WITH HDPE ADJUSTING RINGS.
15. CONTRACTOR SHALL PROVIDE TRAFFIC CONTROL PLAN FOR PAVEMENT REMOVAL, UTILITY INSTALLATION, AND REPLACEMENT AS NEEDED.
16. SANITARY SERVICE RISER PIPE SHALL BE OUTSIDE OF THE ROAD RIGHT OF WAY. RISERS SHALL BE PLACED ON THE PROPERTY LINE IF REQUIRED. SEE DETAIL SAN-001.

REV NO.	DATE	DESCRIPTION
1	04/01/2025	REVISION PER CITY REVIEW
2	04/24/2025	REVISION PER CITY REVIEW

DATE: 04/24/2025
DESIGN BY: M.J.M
DRAWN BY: M.J.M
CHECKED BY: C.J.D
DWG FILE: UTILITY
FILE NO.: 22-0030.00

I hereby certify that this plan, specification, or report was prepared by me or under my direct supervision and that I am a duly Licensed Professional Engineer under the laws of the State of Minnesota.

NOT FOR CONSTRUCTION

Signed: Christopher J. Dahn
Date: Lic. No. 58628

BOGART, PEDERSON & ASSOCIATES, INC.
LAND SURVEYING
CIVIL ENGINEERING
ENVIRONMENTAL SERVICES
12076 FIRST STREET, BECKER, MN 55308-9322
TEL: 763-262-3822 FAX: 763-262-3844

CEDAR RIDGE COMMUNITY LLC
CEDAR RIDGE COMMUNITY
City of North Branch, Chisago County, MN

SOUTH UTILITY PLAN

SHEET NO.
C4.2

LEGEND:

- PROPOSED RIP RAP
- 984 PROPOSED CONTOUR
- PROPOSED STORM SEWER
- PROPOSED WATER LINE
- PROPOSED SANITARY SEWER
- PROPOSED WATER SERVICE
- PROPOSED SANITARY SERVICE
- PROPOSED CATCH BASIN
- PROPOSED FLARED END SECITON
- PROPOSED STORM MANHOLE
- PROPOSED GATE VALVE & BOX
- PROPOSED HYDRANT
- PROPOSED SANITARY MANHOLE

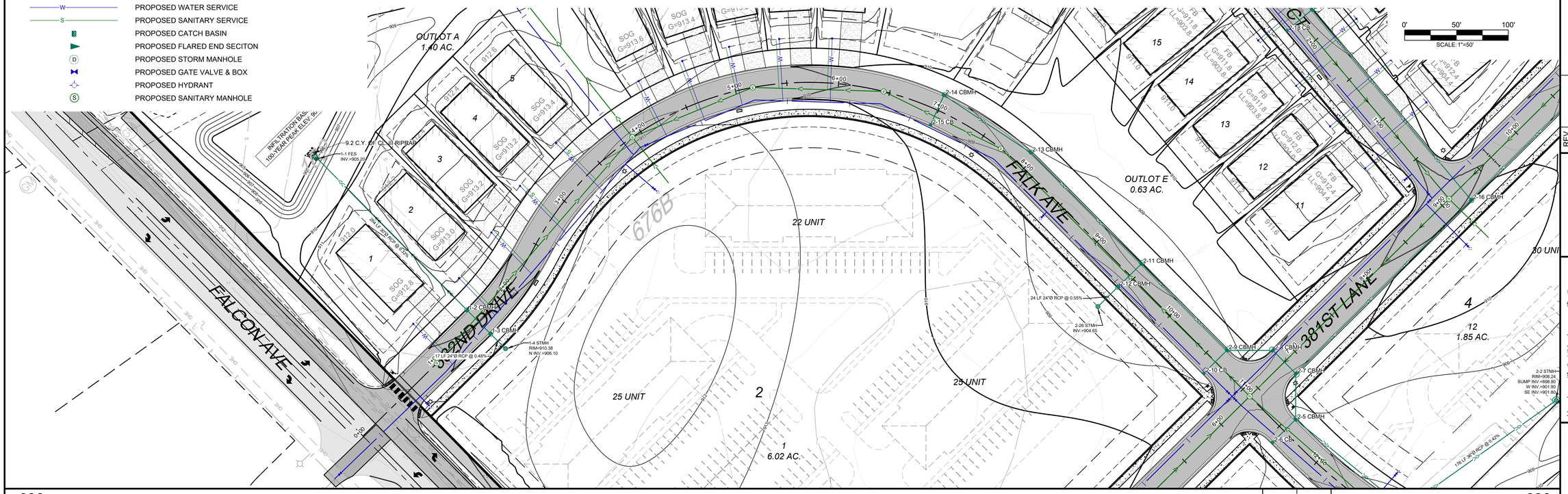

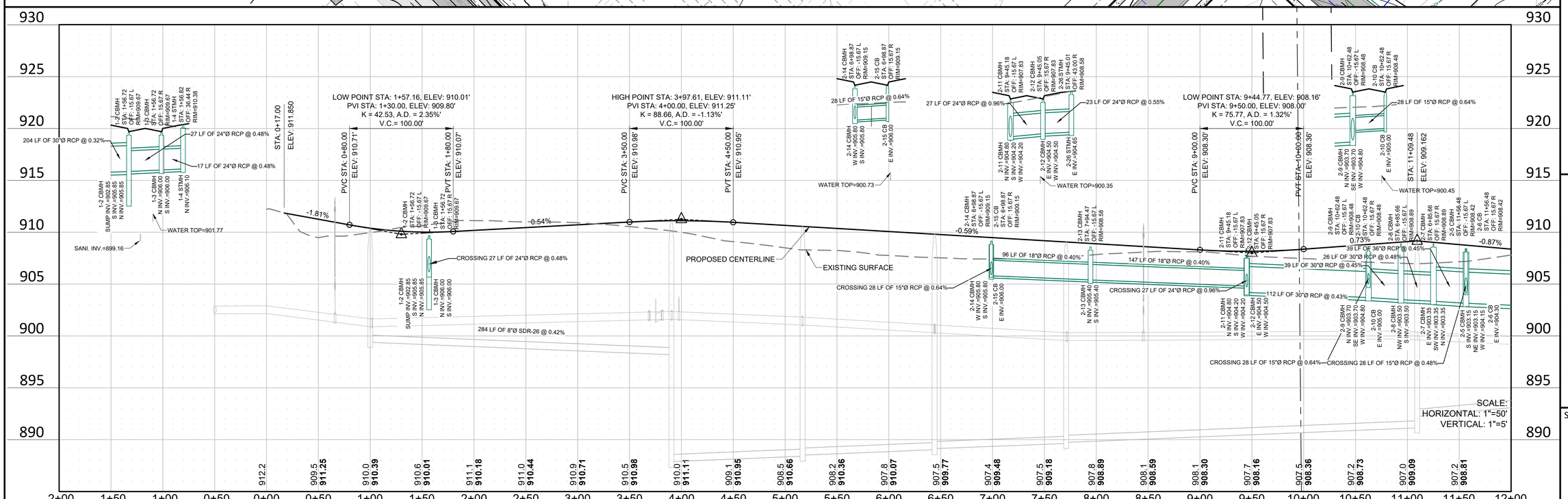

REV NO.	DATE	DESCRIPTION
1	04/01/2025	REVISION PER CITY REVIEW
2	04/24/2025	REVISION PER CITY REVIEW

DATE:	04/24/2025
DESIGN BY:	MJM
DRAWN BY:	MJM
CHECKED BY:	CJD
DWG FILE:	GRADING
FILE NO.:	22-0030.00

I hereby certify that this plan, specification, or report was prepared by me or under my direct supervision and that I am a duly Licensed Professional Engineer under the laws of the State of Minnesota.

Signed: Christopher J. Dahn

Date: Lic. No. 58628

NOT FOR CONSTRUCTION

BOGART, PEDERSON & ASSOCIATES, INC.
LAND SURVEYING
CIVIL ENGINEERING
ENVIRONMENTAL SERVICES
13076 FIRST STREET, BECKER, MN 55308-9322
TEL: 763-262-9002 FAX: 763-262-9044

CEDAR RIDGE COMMUNITY LLC
CEDAR RIDGE COMMUNITY
City of North Branch, Chisago County, MN

382ND & FALK AVE (STREET & STORM)

SHEET NO.

C5.1

N:\Projects Current\22-0030.00 Becker North Branch Plat\Civil\CAD Files\NB Utility.dwg 4/24/2025 3:08 PM

LEGEND:

- PROPOSED RIP RAP
- 984 PROPOSED CONTOUR
- PROPOSED STORM SEWER
- PROPOSED WATER LINE
- PROPOSED SANITARY SEWER
- W PROPOSED WATER SERVICE
- S PROPOSED SANITARY SERVICE
- PROPOSED CATCH BASIN
- PROPOSED FLARED END SECITON
- D PROPOSED STORM MANHOLE
- PROPOSED GATE VALVE & BOX
- PROPOSED HYDRANT
- S PROPOSED SANITARY MANHOLE

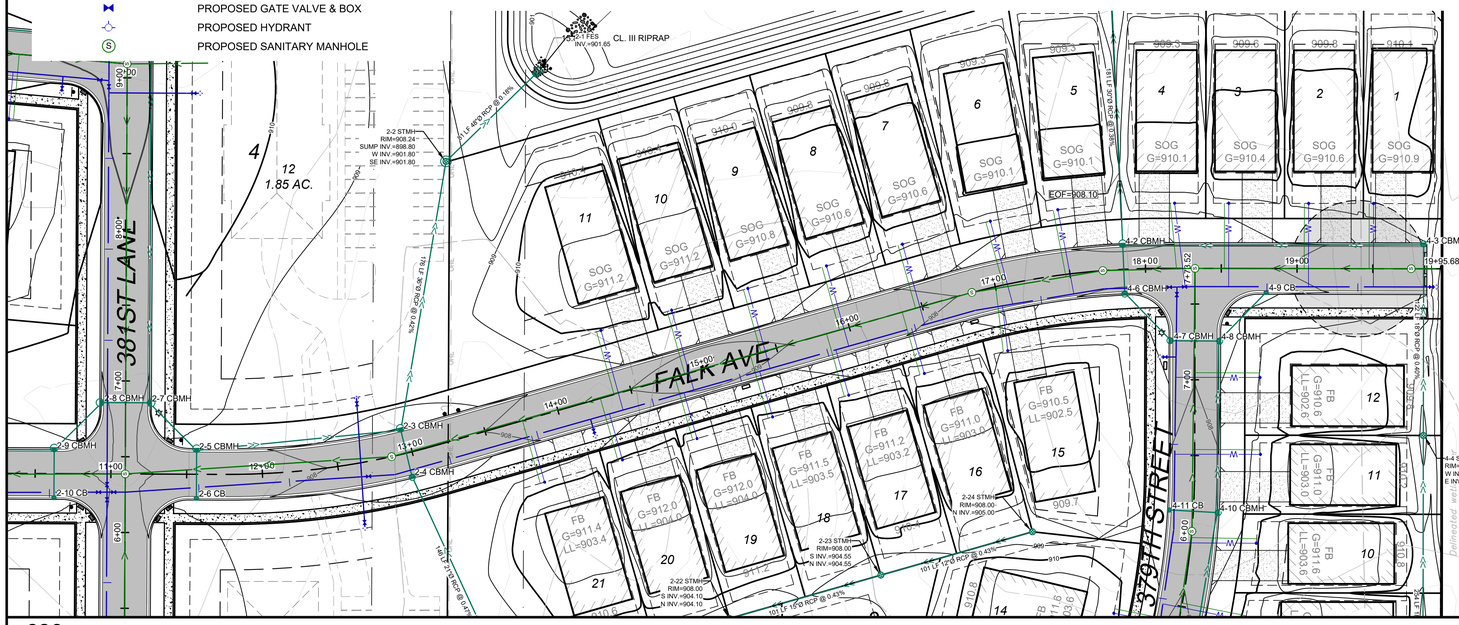

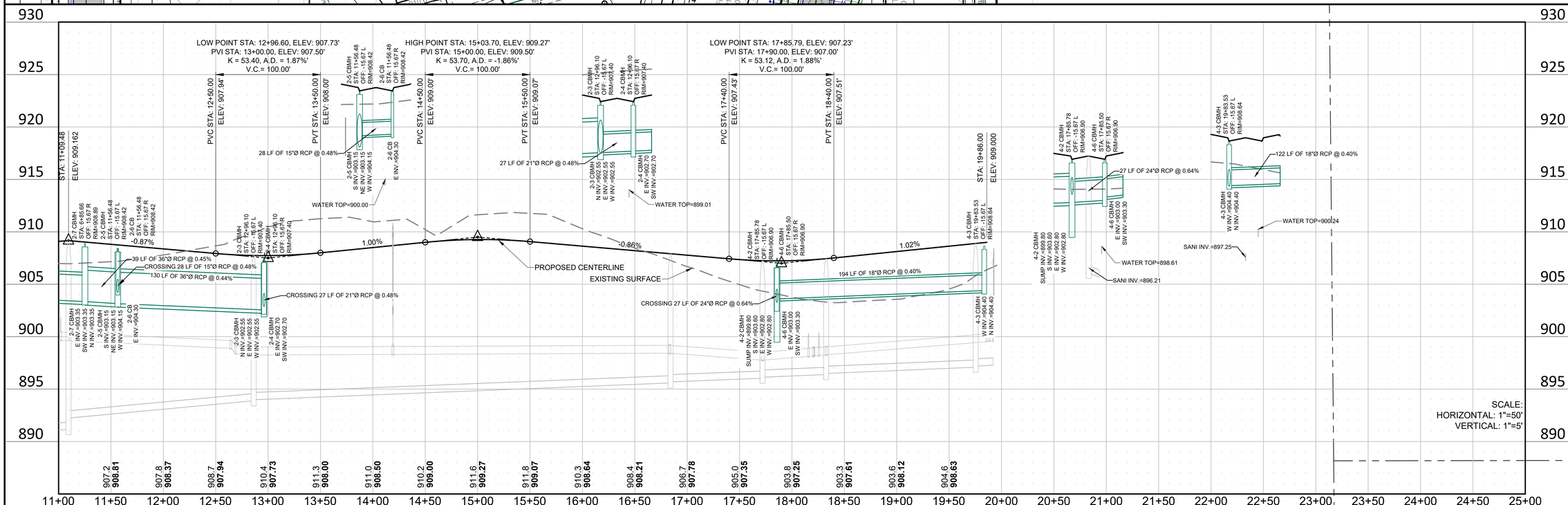

REV NO.	DATE	DESCRIPTION
1	04/01/2025	REVISION PER CITY REVIEW
2	04/24/2025	REVISION PER CITY REVIEW

DATE: 04/24/2025
DESIGN BY: MJM
DRAWN BY: MJM
CHECKED BY: CJD
DWG FILE: GRADING
FILE NO.: 22-0030.00

I hereby certify that this plan, specification, or report was prepared by me or under my direct supervision and that I am a duly Licensed Professional Engineer under the laws of the State of Minnesota.

NOT FOR CONSTRUCTION

Signed: Christopher J. Dahn
Date: Lic. No. 58628

BOGART, PEDERSON & ASSOCIATES, INC.
LAND SURVEYING
CIVIL ENGINEERING
ENVIRONMENTAL SERVICES
13076 FIRST STREET, BECKER, MN 55308-9322
TEL: 763-262-9822 FAX: 763-262-9844

CEDAR RIDGE COMMUNITY LLC
CEDAR RIDGE COMMUNITY
City of North Branch, Chisago County, MN

FALK AVE (STREET & STORM)

SHEET NO.
C5.2

LEGEND:

- PROPOSED RIP RAP
- 984 PROPOSED CONTOUR
- PROPOSED STORM SEWER
- PROPOSED WATER LINE
- PROPOSED SANITARY SEWER
- W PROPOSED WATER SERVICE
- S PROPOSED SANITARY SERVICE
- PROPOSED CATCH BASIN
- PROPOSED FLARED END SECITON
- D PROPOSED STORM MANHOLE
- PROPOSED GATE VALVE & BOX
- PROPOSED HYDRANT
- S PROPOSED SANITARY MANHOLE

N

0' 50' 100'

SCALE: 1"=50'

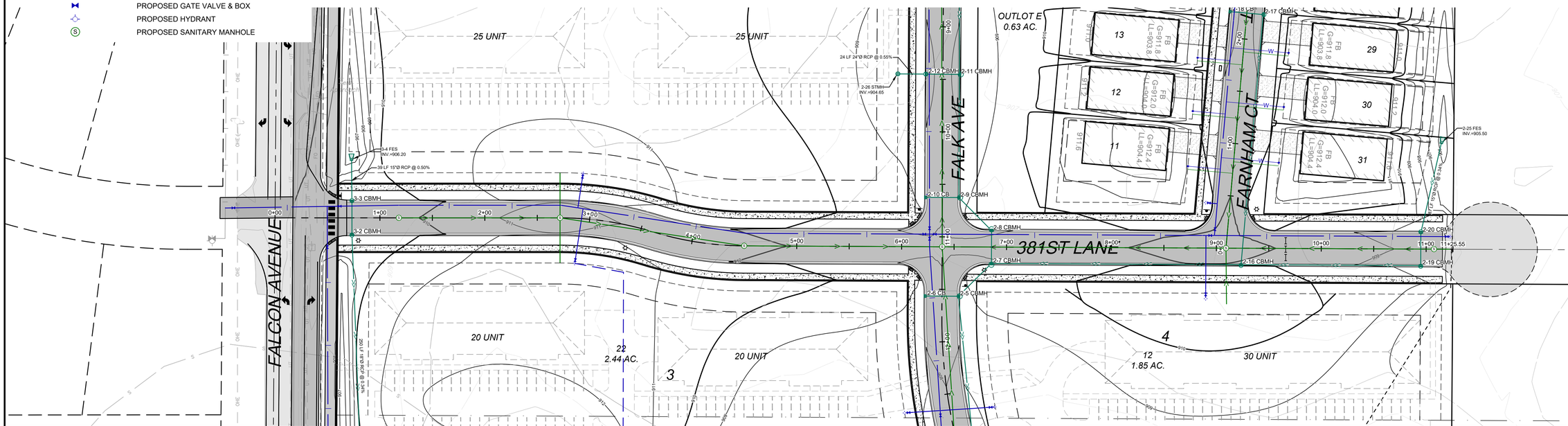

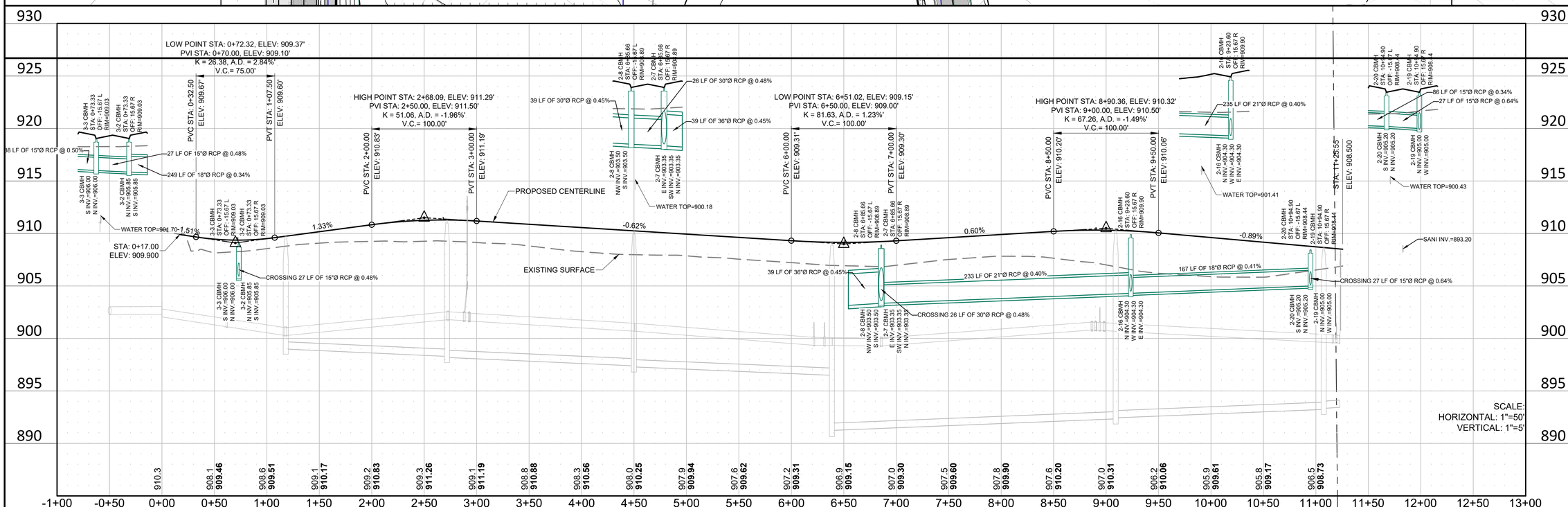

REV NO.	DATE	DESCRIPTION
1	04/01/2025	REVISION PER CITY REVIEW
2	04/24/2025	REVISION PER CITY REVIEW

DATE: 04/24/2025
DESIGN BY: MJM
DRAWN BY: MJM
CHECKED BY: CJD
DWG FILE: GRADING
FILE NO.: 22-0030.00

I hereby certify that this plan, specification, or report was prepared by me or under my direct supervision and that I am a duly Licensed Professional Engineer under the laws of the State of Minnesota.

NOT FOR CONSTRUCTION

Signed: Christopher J. Dahn
Date: Lic. No. 58628

BOGART, PEDERSON & ASSOCIATES, INC.
LAND SURVEYING
CIVIL ENGINEERING
ENVIRONMENTAL SERVICES
13076 FIRST STREET, BECKER, MN 55308-9322
TEL: 763-262-9822 FAX: 763-262-9844

CEDAR RIDGE COMMUNITY LLC
CEDAR RIDGE COMMUNITY
City of North Branch, Chisago County, MN

381ST LANE (STREET & STORM)

SHEET NO.

C5.3

N:\Projects Current\22-0030.02 Becker North Branch Plat\Civil\CAD Files\NB Utility.dwg 4/24/2025 3:09 PM

SCALE: 1"=50'

LEGEND:

- PROPOSED RIP RAP
- 984 PROPOSED CONTOUR
- PROPOSED STORM SEWER
- PROPOSED WATER LINE
- PROPOSED SANITARY SEWER
- W PROPOSED WATER SERVICE
- S PROPOSED SANITARY SERVICE
- PROPOSED CATCH BASIN
- PROPOSED FLARED END SECITON
- D PROPOSED STORM MANHOLE
- PROPOSED GATE VALVE & BOX
- PROPOSED HYDRANT
- S PROPOSED SANITARY MANHOLE

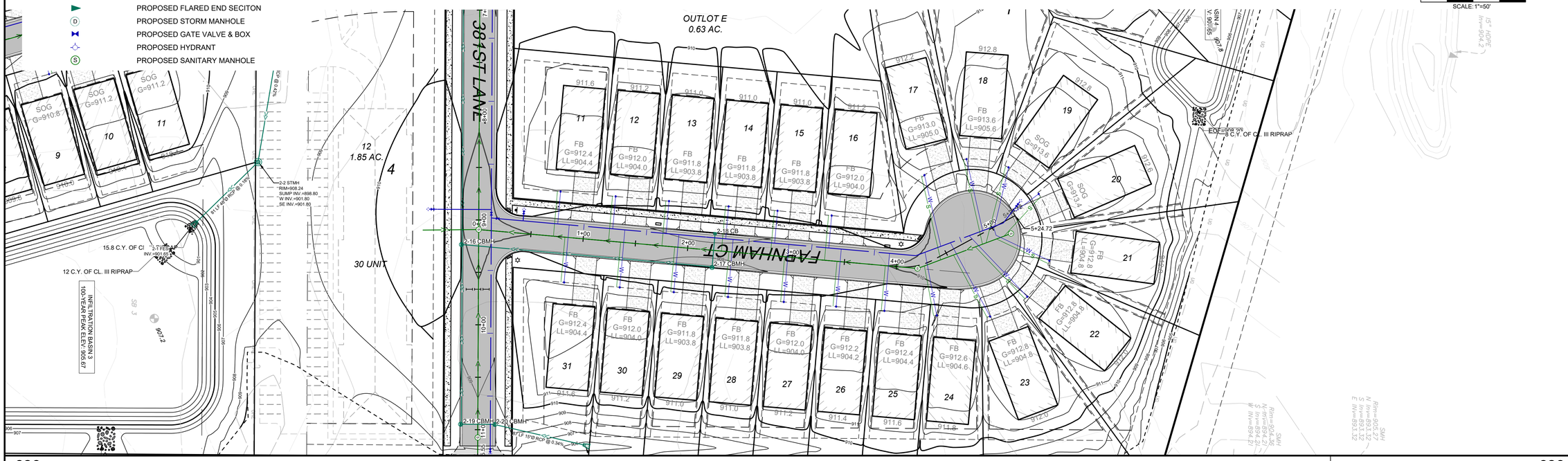

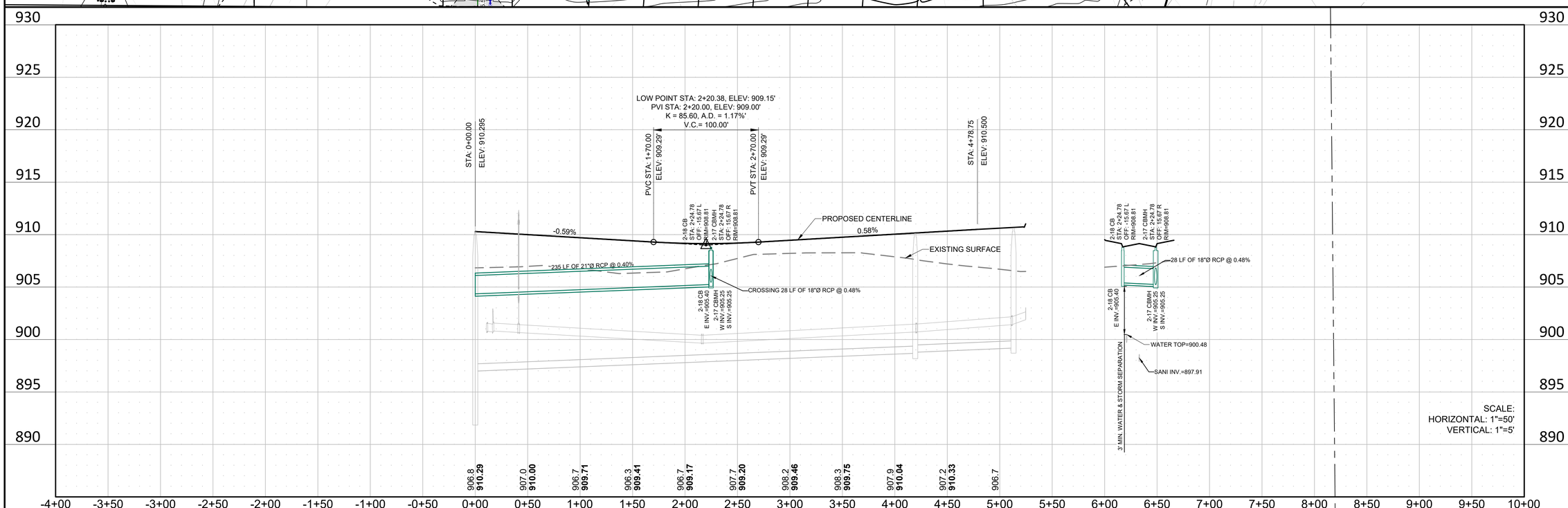

REV NO.	DATE	DESCRIPTION
1	04/01/2025	REVISION PER CITY REVIEW
2	04/24/2025	REVISION PER CITY REVIEW

DATE: 04/24/2025
DESIGN BY: MJM
DRAWN BY: MJM
CHECKED BY: CJD
DWG FILE: GRADING
FILE NO.: 22-0030.00

I hereby certify that this plan, specification, or report was prepared by me or under my direct supervision and that I am a duly Licensed Professional Engineer under the laws of the State of Minnesota.

NOT FOR CONSTRUCTION

Signed: Christopher J. Dahn
Date: Lic. No. 58628

BOGART, PEDERSON & ASSOCIATES, INC.
LAND SURVEYING
CIVIL ENGINEERING
ENVIRONMENTAL SERVICES
13076 FIRST STREET, BECKER, MN 55308-9322
TEL: 763-262-9822 FAX: 763-262-9844

CEDAR RIDGE COMMUNITY LLC
CEDAR RIDGE COMMUNITY
City of North Branch, Chisago County, MN

FARNHAM CT (STREET & STORM)

SHEET NO.
C5.4

N:\Projects Current\22-0030.02 Belden North Branch Plat\Civil\CAD Files\NB Utility.dwg 4/24/2025 3:09 PM

LEGEND:

- PROPOSED RIP RAP
- 984 PROPOSED CONTOUR
- PROPOSED STORM SEWER
- PROPOSED WATER LINE
- PROPOSED SANITARY SEWER
- W PROPOSED WATER SERVICE
- S PROPOSED SANITARY SERVICE
- PROPOSED CATCH BASIN
- PROPOSED FLARED END SECITON
- D PROPOSED STORM MANHOLE
- PROPOSED GATE VALVE & BOX
- PROPOSED HYDRANT
- S PROPOSED SANITARY MANHOLE

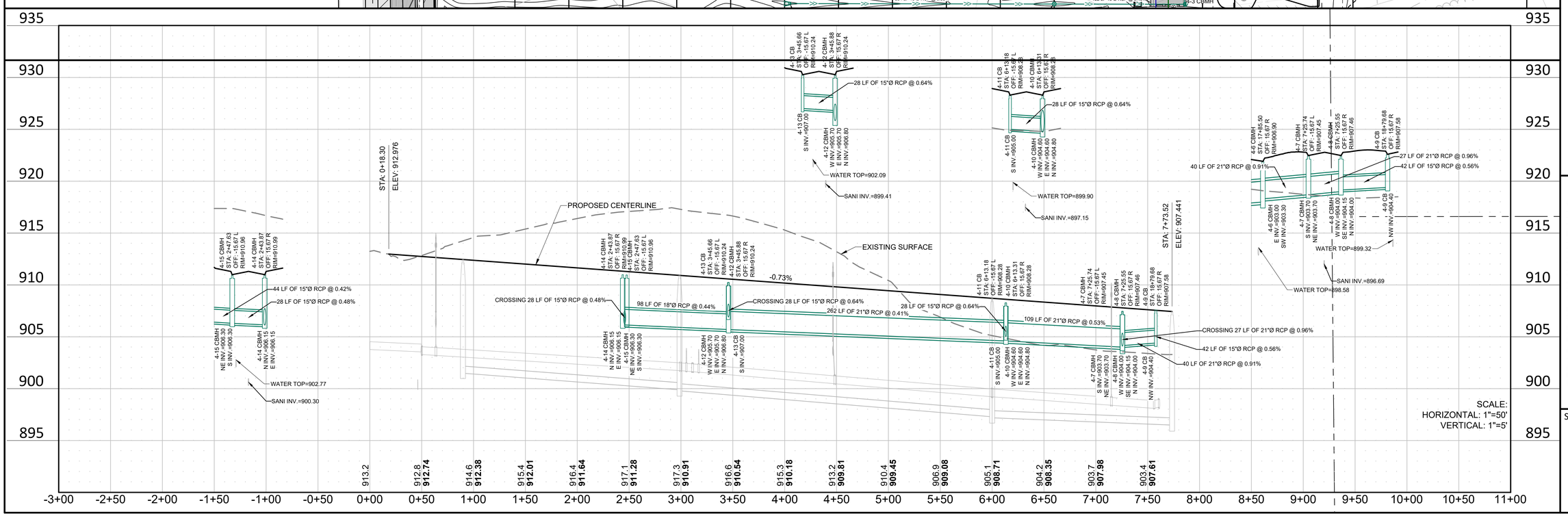

REV NO.	DATE	DESCRIPTION
1	04/01/2025	REVISION PER CITY REVIEW
2	04/24/2025	REVISION PER CITY REVIEW

DATE: 04/24/2025
DESIGN BY: MJM
DRAWN BY: MJM
CHECKED BY: CJD
DWG FILE: GRADING
FILE NO.: 22-0030.00

I hereby certify that this plan, specification, or report was prepared by me or under my direct supervision and that I am a duly Licensed Professional Engineer under the laws of the State of Minnesota.

Signed: Christopher J. Dahn
Date: Lic. No. 58628

NOT FOR CONSTRUCTION

BOGART, PEDERSON & ASSOCIATES, INC.
LAND SURVEYING
CIVIL ENGINEERING
ENVIRONMENTAL SERVICES
13076 FIRST STREET, BECKER, MN 55308-9322
TEL: 763-262-9822 FAX: 763-262-9844

CEDAR RIDGE COMMUNITY LLC
CEDAR RIDGE COMMUNITY
City of North Branch, Chisago County, MN

379TH STREET (STREET & STORM)

SHEET NO.
C5.5

LEGEND:

- PROPOSED RIP RAP
- 984 PROPOSED CONTOUR
- PROPOSED STORM SEWER
- PROPOSED WATER LINE
- PROPOSED SANITARY SEWER
- W PROPOSED WATER SERVICE
- S PROPOSED SANITARY SERVICE
- PROPOSED CATCH BASIN
- PROPOSED FLARED END SECITON
- D PROPOSED STORM MANHOLE
- PROPOSED GATE VALVE & BOX
- PROPOSED HYDRANT
- S PROPOSED SANITARY MANHOLE

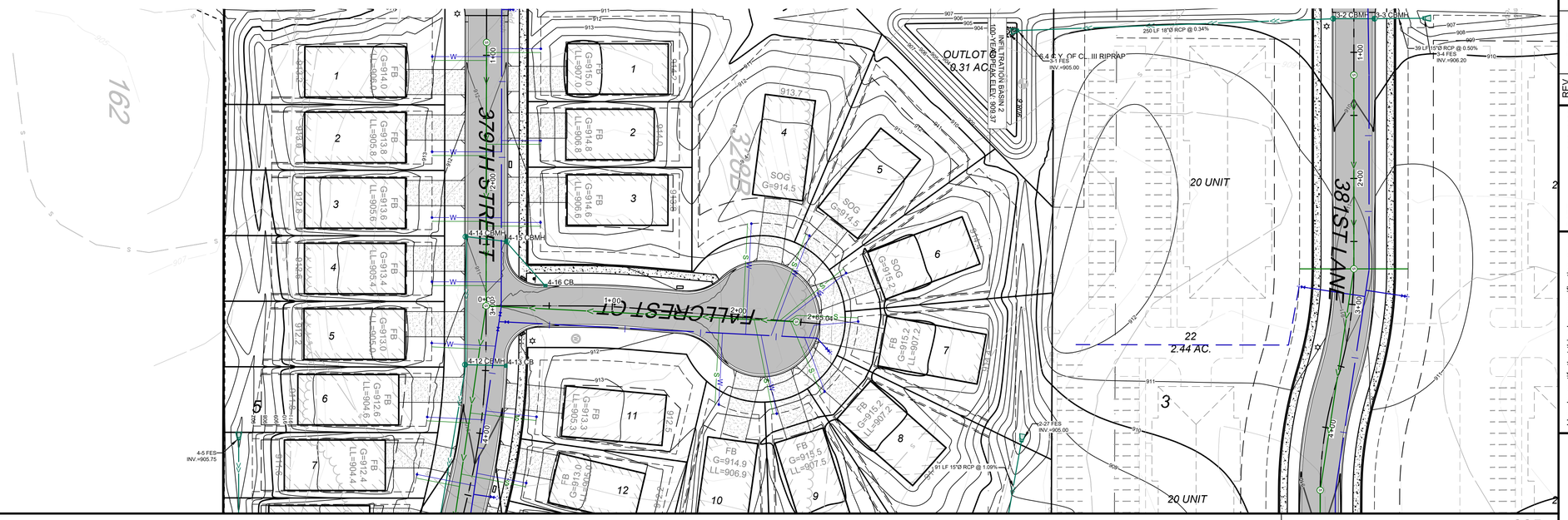

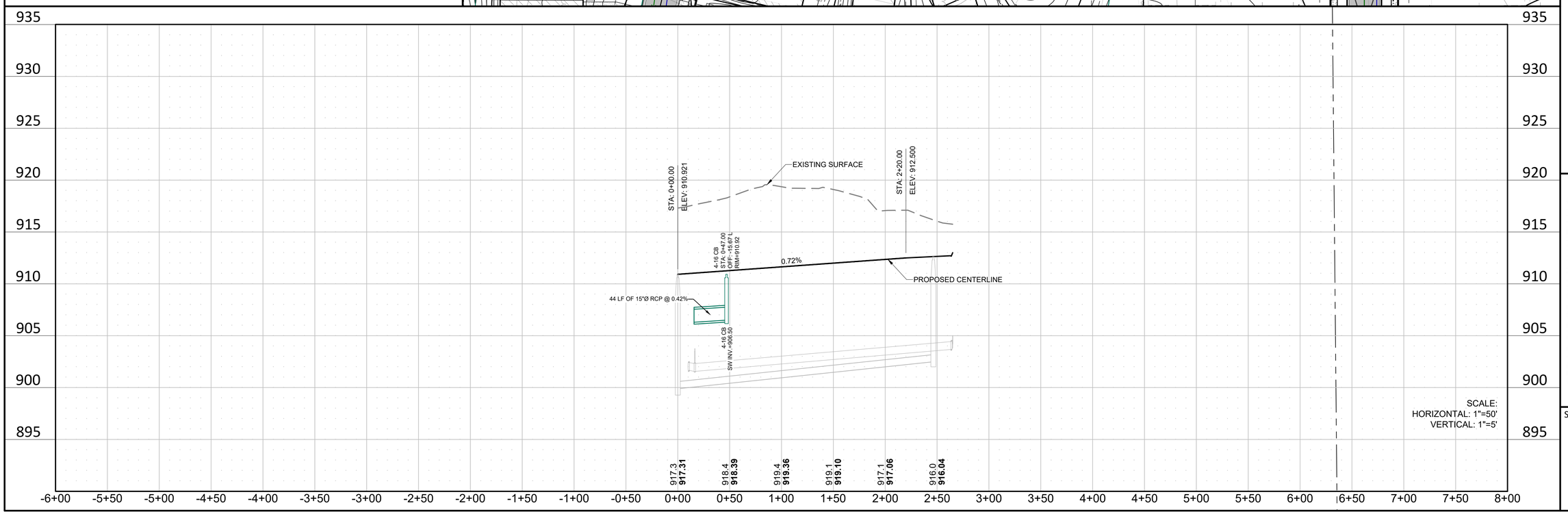

REV NO.	DATE	DESCRIPTION
1	04/01/2025	REVISION PER CITY REVIEW
2	04/24/2025	REVISION PER CITY REVIEW

DATE: 04/24/2025
DESIGN BY: MJM
DRAWN BY: MJM
CHECKED BY: CJD
DWG FILE: GRADING
FILE NO.: 22-0030.00

I hereby certify that this plan, specification, or report was prepared by me or under my direct supervision and that I am a duly Licensed Professional Engineer under the laws of the State of Minnesota.

NOT FOR CONSTRUCTION

Signed: Christopher J. Dahn
Date: Lic. No. 58628

BOGART, PEDERSON & ASSOCIATES, INC.
LAND SURVEYING
CIVIL ENGINEERING
ENVIRONMENTAL SERVICES
13076 FIRST STREET, BECKER, MN 55308-9322
TEL: 763-262-9822 FAX: 763-262-9844

CEDAR RIDGE COMMUNITY LLC
CEDAR RIDGE COMMUNITY
City of North Branch, Chisago County, MN

FALLCREST CT (STREET & STORM)

SHEET NO.
C5.6

N:\Projects Current\22-0030.02 Bedsen North Branch Plat\Civil\CAD Files\NB Utility.dwg
4/24/2025 3:10 PM

LEGEND:

- PROPOSED RIP RAP
- PROPOSED CONTOUR
- PROPOSED STORM SEWER
- PROPOSED WATER LINE
- PROPOSED SANITARY SEWER
- PROPOSED WATER SERVICE
- PROPOSED SANITARY SERVICE
- PROPOSED CATCH BASIN
- PROPOSED FLARED END SECITON
- PROPOSED STORM MANHOLE
- PROPOSED GATE VALVE & BOX
- PROPOSED HYDRANT
- PROPOSED SANITARY MANHOLE

0' 50' 100'
SCALE: 1"=50'

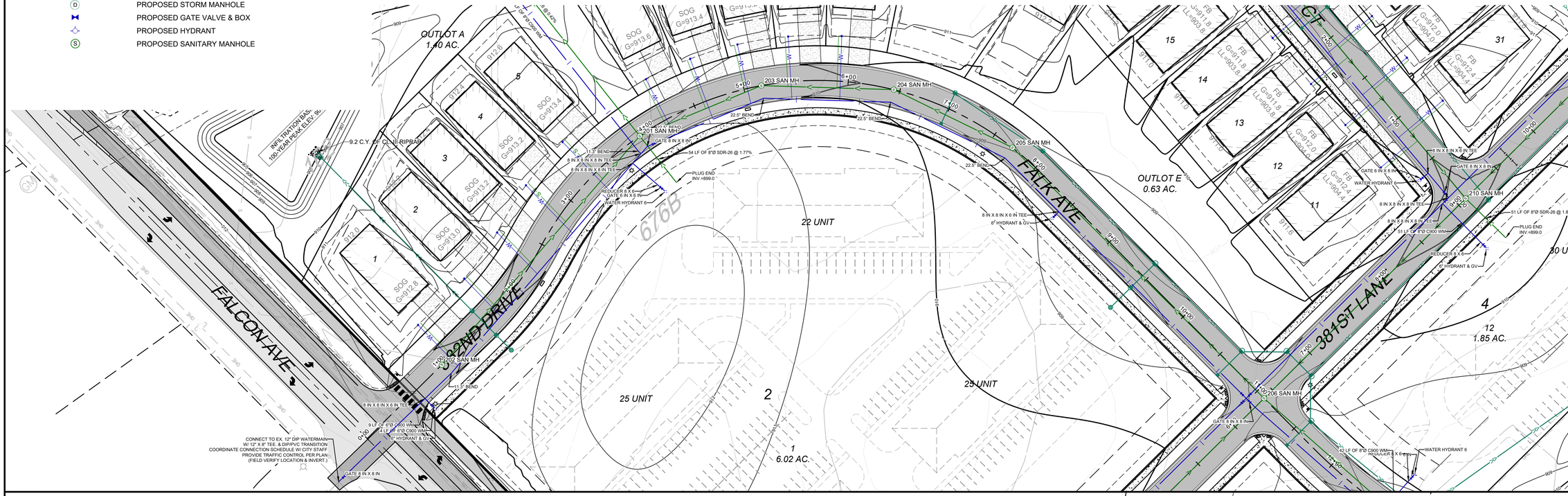

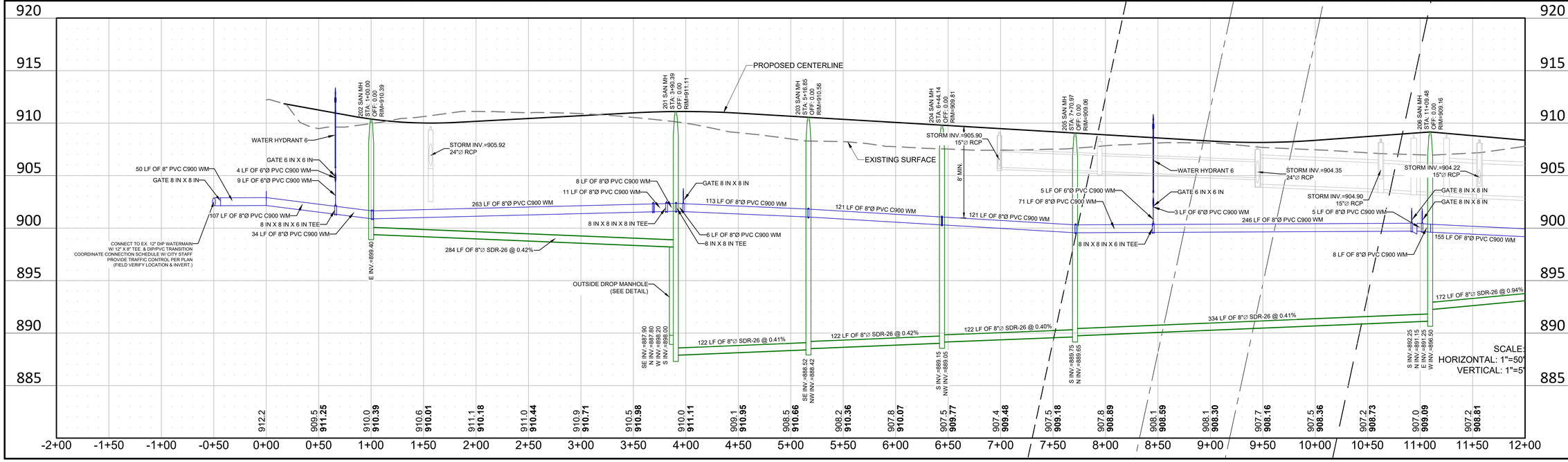

REV NO.	DATE	DESCRIPTION
1	04/01/2025	REVISION PER CITY REVIEW
2	04/24/2025	REVISION PER CITY REVIEW

DATE: 04/24/2025
DESIGN BY: MJM
DRAWN BY: MJM
CHECKED BY: CJD
DWG FILE: GRADING
FILE NO.: 22-0030.00

I hereby certify that this plan, specification, or report was prepared by me or under my direct supervision and that I am a duly Licensed Professional Engineer under the laws of the State of Minnesota.

NOT FOR CONSTRUCTION

Signed: Christopher J. Dahn
Date: Lic. No. 58628

BOGART, PEDERSON & ASSOCIATES, INC.
LAND SURVEYING
CIVIL ENGINEERING
ENVIRONMENTAL SERVICES
13076 FIRST STREET, BECKER, MN 55308-9322
TEL: 763-262-9822 FAX: 763-262-9844

CEDAR RIDGE COMMUNITY LLC
CEDAR RIDGE COMMUNITY
City of North Branch, Chisago County, MN

382ND & FALK AVE (SANI. & WATER)

SHEET NO.
C6.1

N:\Projects Current\22-0030.02 Becker North Branch Plat\Civil\CAD Files\NB Utility.dwg
4/24/2025 3:10 PM

LEGEND:

- PROPOSED RIP RAP
- 984 PROPOSED CONTOUR
- PROPOSED STORM SEWER
- PROPOSED WATER LINE
- PROPOSED SANITARY SEWER
- W PROPOSED WATER SERVICE
- S PROPOSED SANITARY SERVICE
- PROPOSED CATCH BASIN
- PROPOSED FLARED END SECITON
- D PROPOSED STORM MANHOLE
- PROPOSED GATE VALVE & BOX
- PROPOSED HYDRANT
- S PROPOSED SANITARY MANHOLE

N

0' 50' 100'

SCALE: 1"=50'

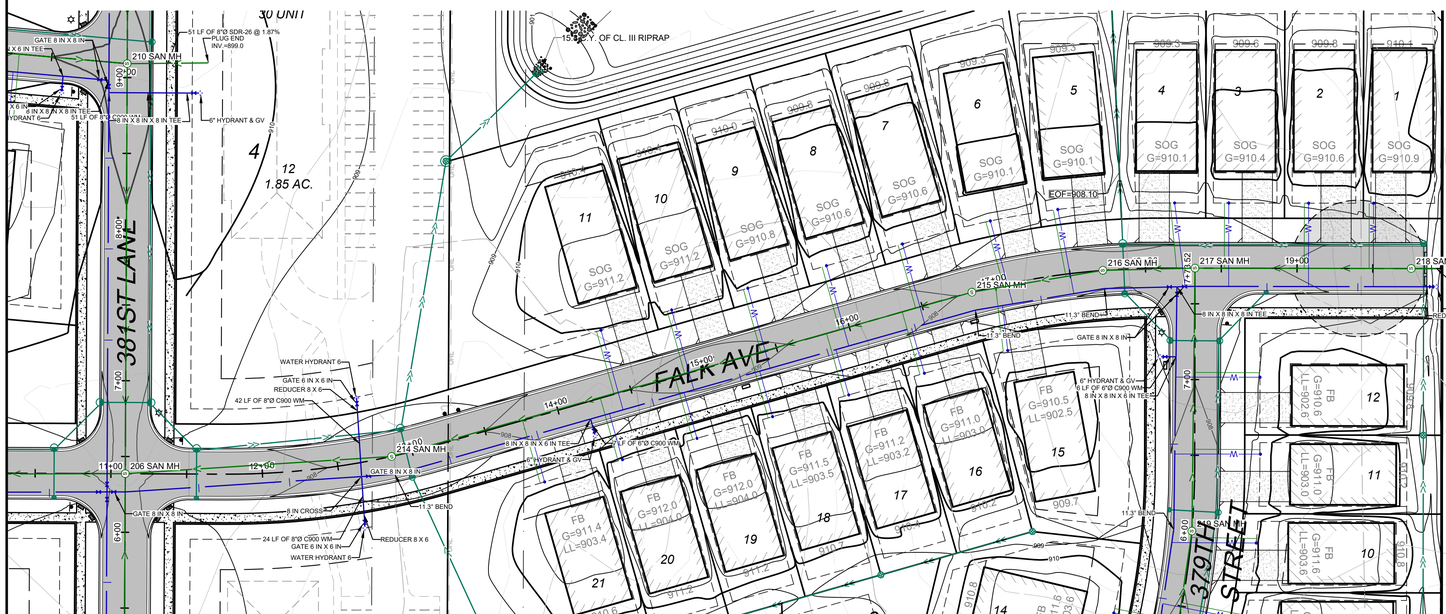

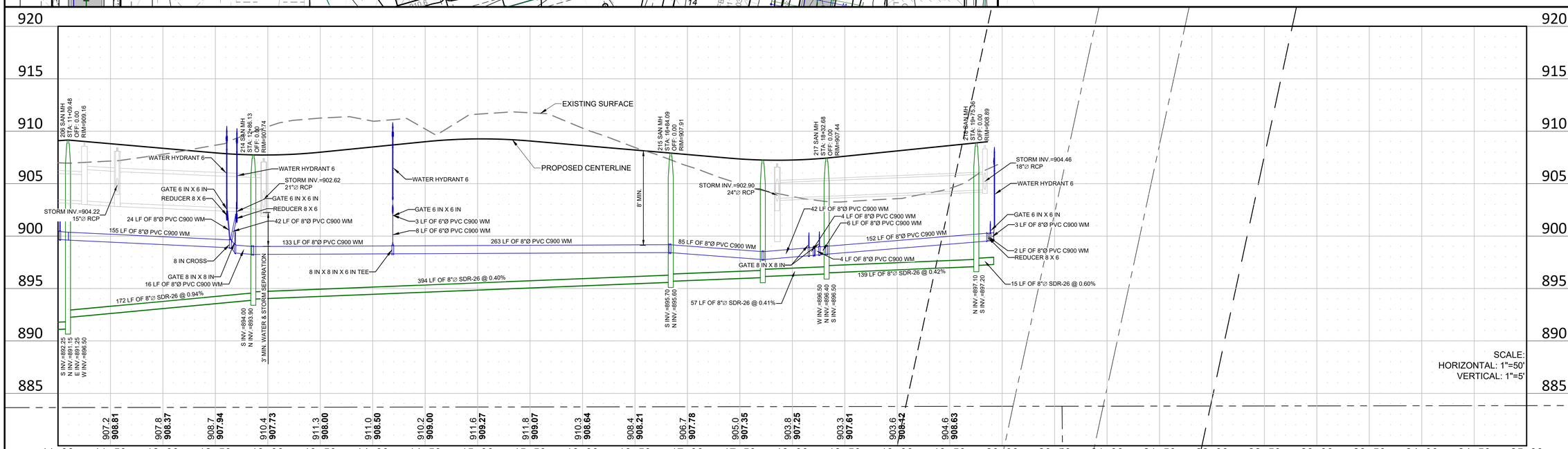

REV NO.	DATE	DESCRIPTION
1	04/01/2025	REVISION PER CITY REVIEW
2	04/24/2025	REVISION PER CITY REVIEW

DATE: 04/24/2025
DESIGN BY: MJM
DRAWN BY: MJM
CHECKED BY: CJD
DWG FILE: GRADING
FILE NO.: 22-0030.00

I hereby certify that this plan, specification, or report was prepared by me or under my direct supervision and that I am a duly Licensed Professional Engineer under the laws of the State of Minnesota.

NOT FOR CONSTRUCTION

Signed: Christopher J. Dahn
Date: Lic. No. 58628

BOGART, PEDERSON & ASSOCIATES, INC.
LAND SURVEYING
CIVIL ENGINEERING
ENVIRONMENTAL SERVICES
13079 FIRST STREET, BECKER, MN 55308-9322
TEL: 763-262-9822 FAX: 763-262-9844

CEDAR RIDGE COMMUNITY LLC
CEDAR RIDGE COMMUNITY
City of North Branch, Chisago County, MN

FALK AVE (SANI. & WATER)

SHEET NO.
C6.2

N:\Projects-Current\22-0030.00 Becker North Branch Plat\Civil\CAD Files\Utility.dwg
4/24/2025 3:10 PM

LEGEND:

- PROPOSED RIP RAP
- 984 PROPOSED CONTOUR
- PROPOSED STORM SEWER
- PROPOSED WATER LINE
- PROPOSED SANITARY SEWER
- W PROPOSED WATER SERVICE
- S PROPOSED SANITARY SERVICE
- PROPOSED CATCH BASIN
- PROPOSED FLARED END SECITON
- D PROPOSED STORM MANHOLE
- PROPOSED GATE VALVE & BOX
- PROPOSED HYDRANT
- S PROPOSED SANITARY MANHOLE

N

0' 50' 100'

SCALE: 1"=50'

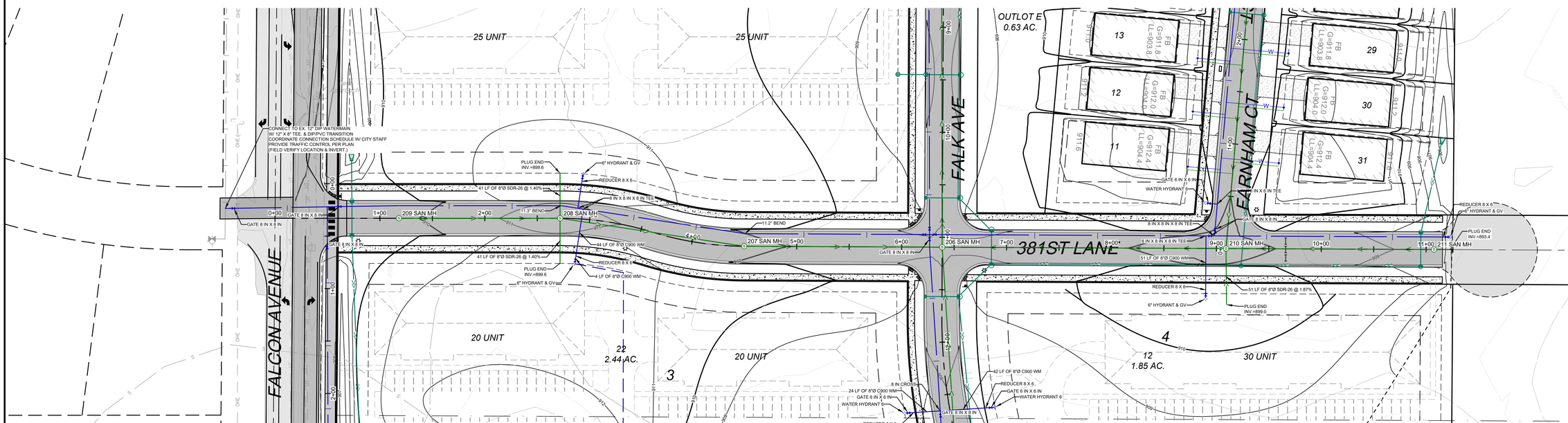

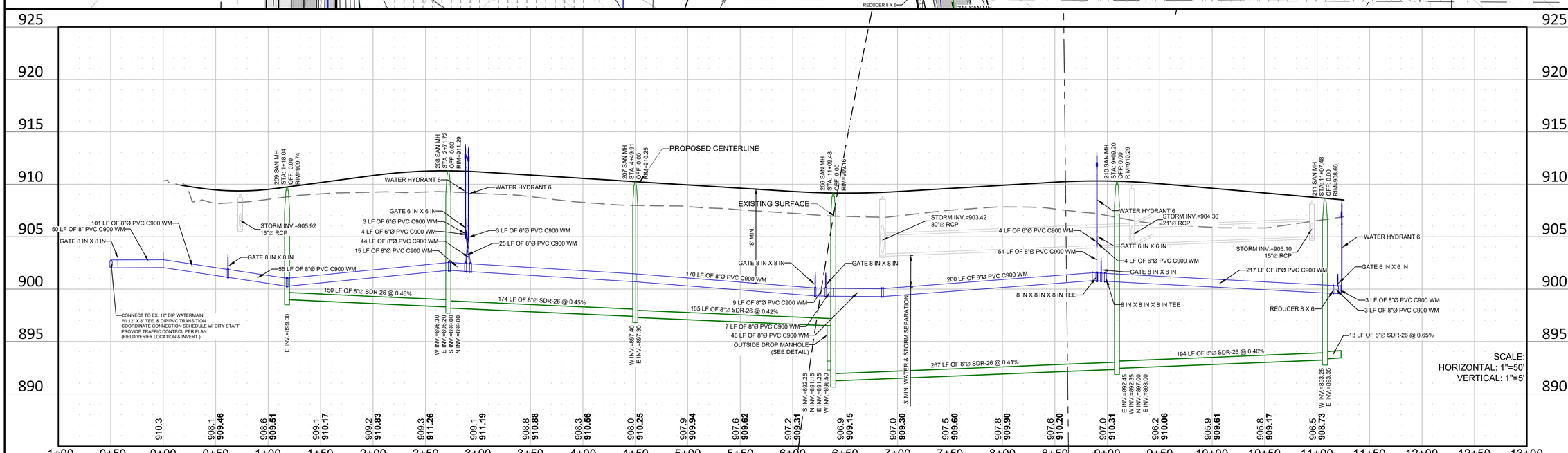

REV NO.	DATE	DESCRIPTION
1	04/01/2025	REVISION PER CITY REVIEW
2	04/24/2025	REVISION PER CITY REVIEW

DATE: 04/24/2025
DESIGN BY: MJM
DRAWN BY: MJM
CHECKED BY: CJD
DWG FILE: GRADING
FILE NO.: 22-0030.00

I hereby certify that this plan, specification, or report was prepared by me or under my direct supervision and that I am a duly Licensed Professional Engineer under the laws of the State of Minnesota.

Signed: Christopher J. Dahn
Date: Lic. No. 58628

NOT FOR CONSTRUCTION

BOGART, PEDERSON & ASSOCIATES, INC.
LAND SURVEYING
CIVIL ENGINEERING
ENVIRONMENTAL SERVICES
13076 FIRST STREET, BECKER, MN 55308-9322
TEL: 763-262-3822 FAX: 763-262-3844

CEDAR RIDGE COMMUNITY LLC
CEDAR RIDGE COMMUNITY
City of North Branch, Chisago County, MN

381ST LANE (SANI. & WATER)

SHEET NO.
C6.3

N:\Projects Current\22-0030.00 Breider North Branch Plat\Civil\CAD Files\MB Utility.dwg
4/24/2025 3:10 PM

LEGEND:

- PROPOSED RIP RAP
- 984 PROPOSED CONTOUR
- PROPOSED STORM SEWER
- PROPOSED WATER LINE
- PROPOSED SANITARY SEWER
- W PROPOSED WATER SERVICE
- S PROPOSED SANITARY SERVICE
- PROPOSED CATCH BASIN
- PROPOSED FLARED END SECITON
- D PROPOSED STORM MANHOLE
- PROPOSED GATE VALVE & BOX
- PROPOSED HYDRANT
- S PROPOSED SANITARY MANHOLE

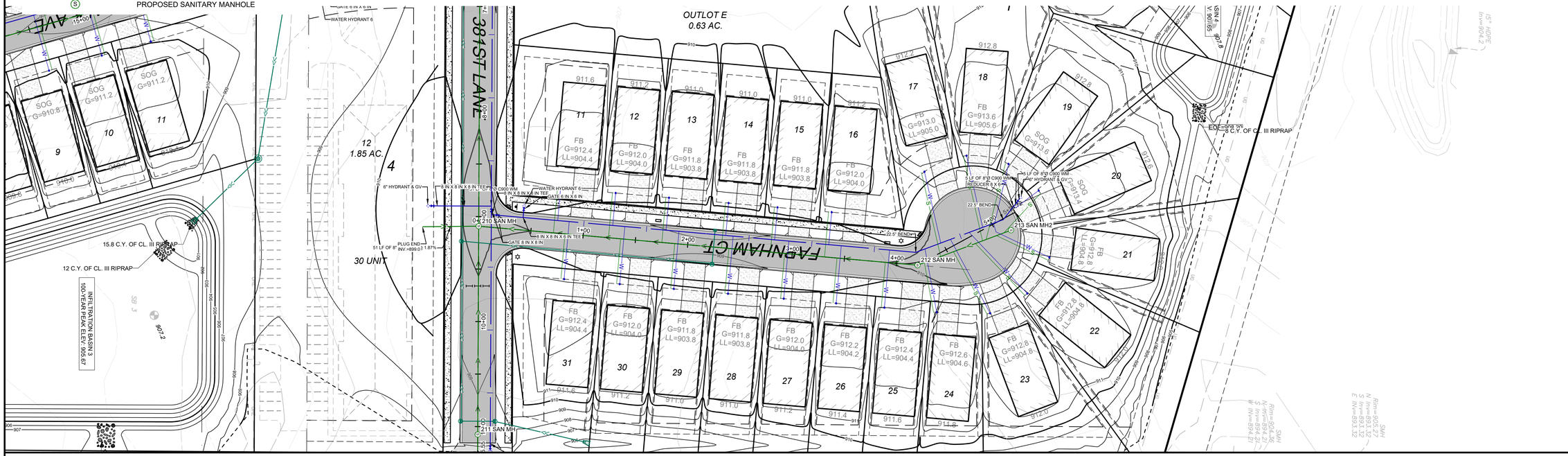

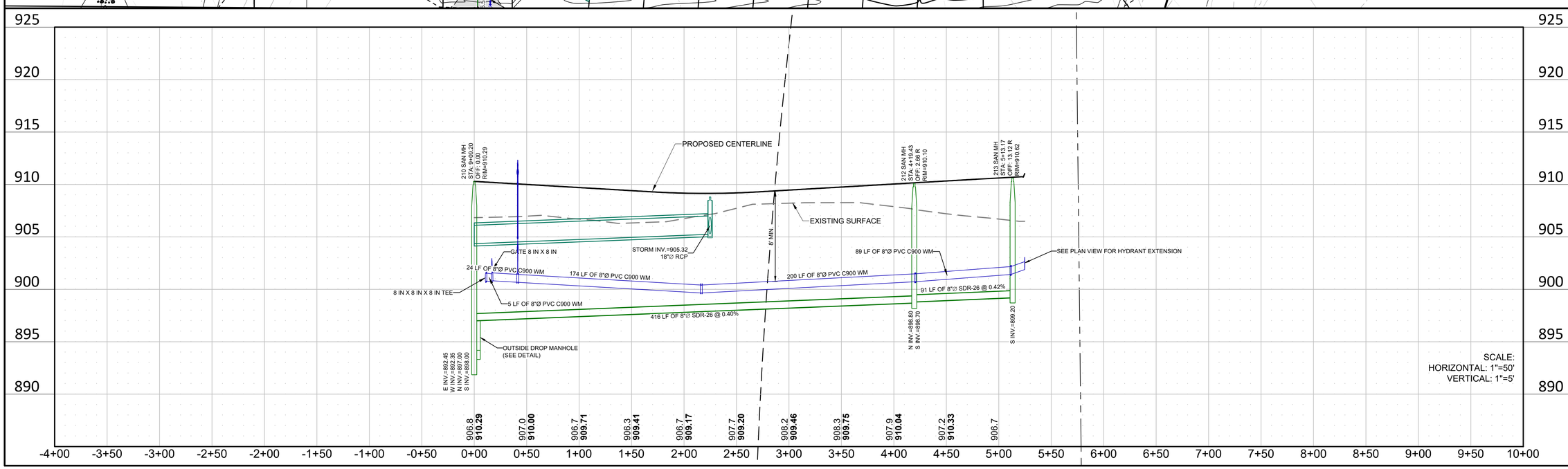

REV NO.	DATE	DESCRIPTION
1	04/01/2025	REVISION PER CITY REVIEW
2	04/24/2025	REVISION PER CITY REVIEW

DATE: 04/24/2025
DESIGN BY: MJM
DRAWN BY: MJM
CHECKED BY: CJD
DWG FILE: GRADING
FILE NO.: 22-0030.00

I hereby certify that this plan, specification, or report was prepared by me or under my direct supervision and that I am a duly Licensed Professional Engineer under the laws of the State of Minnesota.

NOT FOR CONSTRUCTION

Signed: Christopher J. Dahn
Date: Lic. No. 58628

BOGART, PEDERSON & ASSOCIATES, INC.
LAND SURVEYING
CIVIL ENGINEERING
ENVIRONMENTAL SERVICES
13076 FIRST STREET, BECKER, MN 55308-9322
TEL: 763-262-9822 FAX: 763-262-9844

CEDAR RIDGE COMMUNITY LLC
CEDAR RIDGE COMMUNITY
City of North Branch, Chisago County, MN

FARNHAM CT (SANI. & WATER)

SHEET NO.
C6.4

N:\Projects Current\22-0030.02 Bellaire North Branch Plat\Civil\CAD Files\NB Utility.dwg
4/24/2025 3:11 PM

LEGEND:

- PROPOSED RIP RAP
- 984 PROPOSED CONTOUR
- PROPOSED STORM SEWER
- PROPOSED WATER LINE
- PROPOSED SANITARY SEWER
- W PROPOSED WATER SERVICE
- S PROPOSED SANITARY SERVICE
- PROPOSED CATCH BASIN
- PROPOSED FLARED END SECITON
- D PROPOSED STORM MANHOLE
- PROPOSED GATE VALVE & BOX
- PROPOSED HYDRANT
- S PROPOSED SANITARY MANHOLE

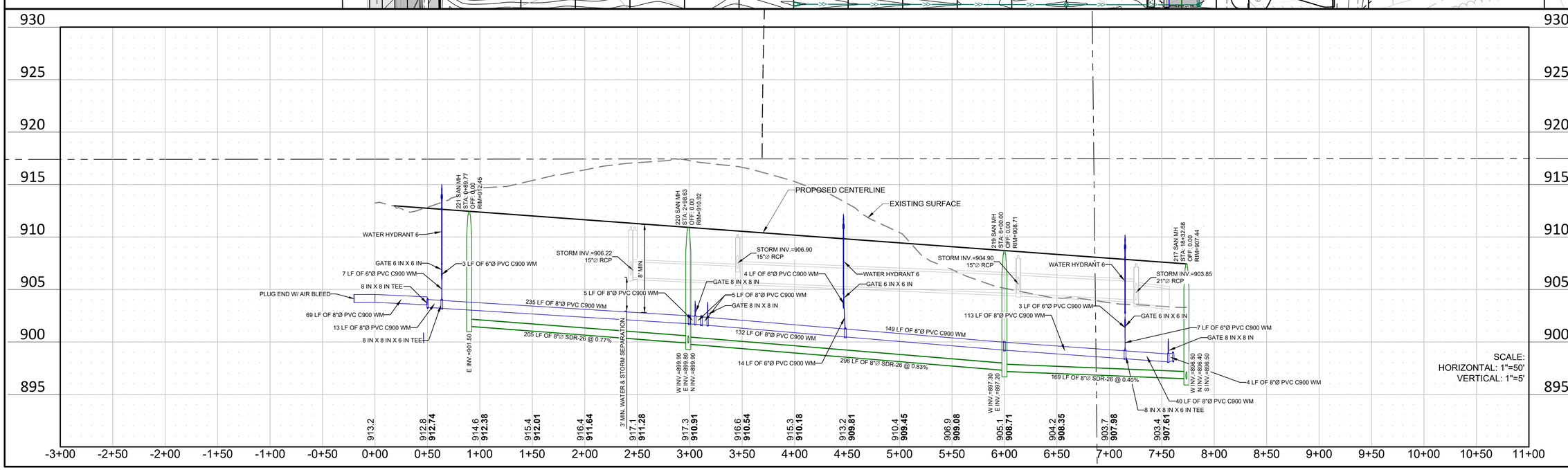

REV NO.	DATE	DESCRIPTION
1	04/01/2025	REVISION PER CITY REVIEW
2	04/24/2025	REVISION PER CITY REVIEW

DATE: 04/24/2025
DESIGN BY: MJM
DRAWN BY: MJM
CHECKED BY: CJD
DWG FILE: GRADING
FILE NO.: 22-0030.00

I hereby certify that this plan, specification, or report was prepared by me or under my direct supervision and that I am a duly Licensed Professional Engineer under the laws of the State of Minnesota.

Signed: Christopher J. Dahn
Date: Lic. No. 58628

NOT FOR CONSTRUCTION

BOGART, PEDERSON & ASSOCIATES, INC.
LAND SURVEYING
CIVIL ENGINEERING
ENVIRONMENTAL SERVICES
13079 FIRST STREET, BECKER, MN 55308-9322
TEL: 763-262-9822 FAX: 763-262-9844

CEDAR RIDGE COMMUNITY LLC
CEDAR RIDGE COMMUNITY
City of North Branch, Chisago County, MN
379TH STREET (SANI. & WATER)

SHEET NO.
C6.5

N:\Projects Current\22-0030.00 Belzer North Branch Pine\Civil\CAD Files\NB Utility.dwg 4/24/2025 3:11 PM

LEGEND:

- PROPOSED RIP RAP
- 984 PROPOSED CONTOUR
- PROPOSED STORM SEWER
- PROPOSED WATER LINE
- PROPOSED SANITARY SEWER
- W PROPOSED WATER SERVICE
- S PROPOSED SANITARY SERVICE
- PROPOSED CATCH BASIN
- PROPOSED FLARED END SECITON
- D PROPOSED STORM MANHOLE
- PROPOSED GATE VALVE & BOX
- PROPOSED HYDRANT
- S PROPOSED SANITARY MANHOLE

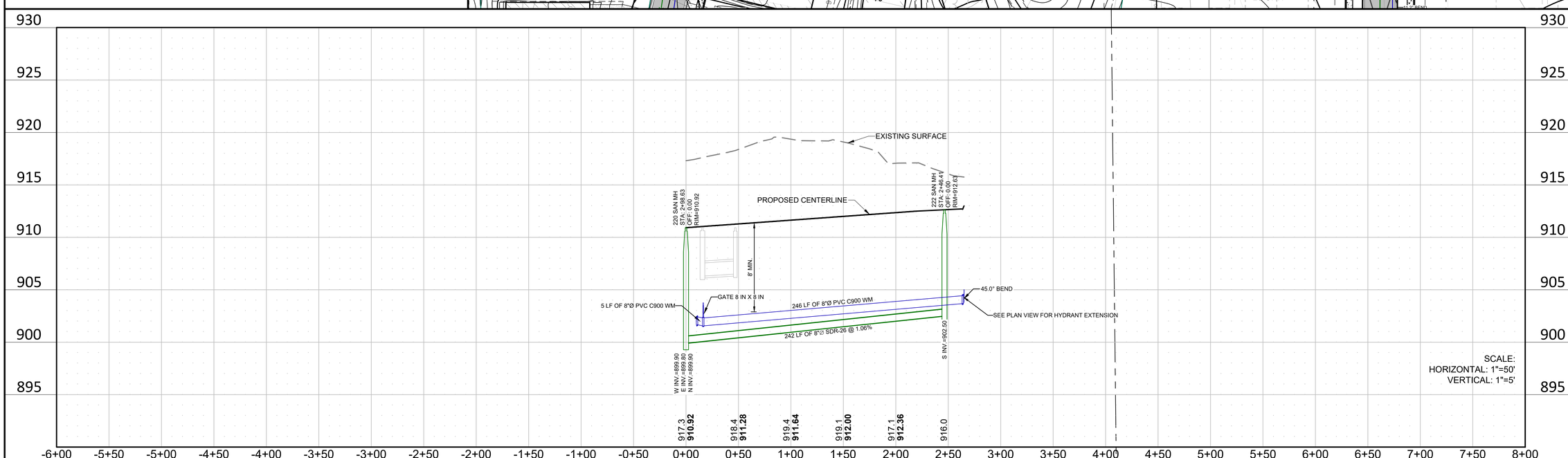

REV NO.	DATE	DESCRIPTION
1	04/01/2025	REVISION PER CITY REVIEW
2	04/24/2025	REVISION PER CITY REVIEW

DATE: 04/24/2025
DESIGN BY: MJM
DRAWN BY: MJM
CHECKED BY: CJD
DWG FILE: GRADING
FILE NO.: 22-0030.00

I hereby certify that this plan, specification, or report was prepared by me or under my direct supervision and that I am a duly Licensed Professional Engineer under the laws of the State of Minnesota.

Signed: Christopher J. Dahn
Date: Lic. No. 58628

NOT FOR CONSTRUCTION

BOGART, PEDERSON & ASSOCIATES, INC.
LAND SURVEYING
CIVIL ENGINEERING
ENVIRONMENTAL SERVICES
13076 FIRST STREET, BECKER, MN 55308-9322
TEL: 763-262-9822 FAX: 763-262-9844

CEDAR RIDGE COMMUNITY LLC
CEDAR RIDGE COMMUNITY
City of North Branch, Chisago County, MN

FALLCREST CT (SANI. & WATER)

SHEET NO.
C6.6

N:\Projects Current\22-0030.00 Becker North Branch Plat\Civil\CAD Files\NB Utility.dwg
4/24/2025 3:11 PM

LEGEND:

- PROPOSED RIP RAP
- 984 PROPOSED CONTOUR
- PROPOSED STORM SEWER
- PROPOSED WATER LINE
- PROPOSED SANITARY SEWER
- W PROPOSED WATER SERVICE
- S PROPOSED SANITARY SERVICE
- PROPOSED CATCH BASIN
- PROPOSED FLARED END SECITON
- D PROPOSED STORM MANHOLE
- PROPOSED GATE VALVE & BOX
- PROPOSED HYDRANT
- S PROPOSED SANITARY MANHOLE

N

0' 50' 100'

SCALE: 1"=50'

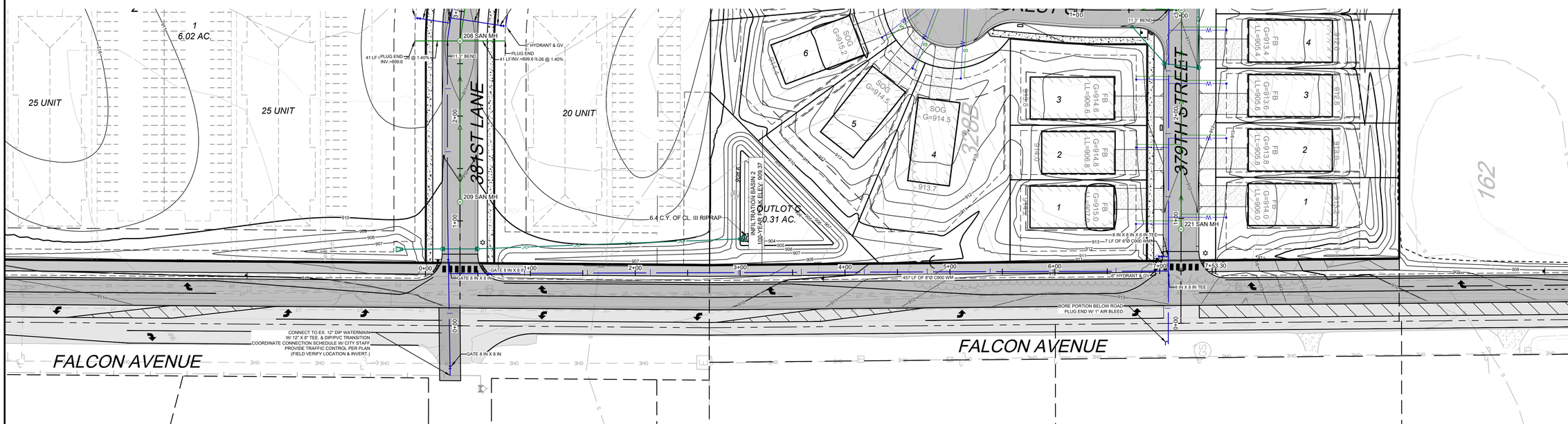

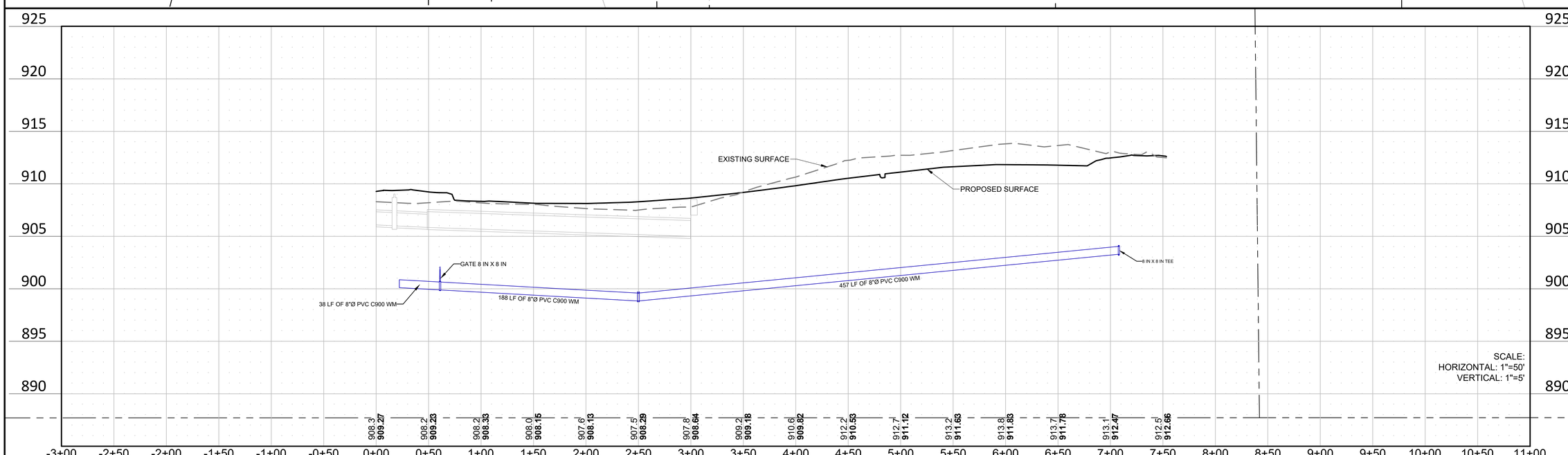

REV NO.	DATE	DESCRIPTION
1	04/01/2025	REVISION PER CITY REVIEW
2	04/24/2025	REVISION PER CITY REVIEW

DATE: 04/24/2025
DESIGN BY: MJM
DRAWN BY: MJM
CHECKED BY: CJD
DWG FILE: GRADING
FILE NO.: 22-0030.00

I hereby certify that this plan, specification, or report was prepared by me or under my direct supervision and that I am a duly Licensed Professional Engineer under the laws of the State of Minnesota.

NOT FOR CONSTRUCTION

Signed: Christopher J. Dahn

Date: Lic. No. 58628

BOGART, PEDERSON & ASSOCIATES, INC.
LAND SURVEYING
CIVIL ENGINEERING
ENVIRONMENTAL SERVICES
13079 FIRST STREET, BECKER, MN 55308-9322
TEL: 763-262-9622 FAX: 763-262-9644

CEDAR RIDGE COMMUNITY LLC
CEDAR RIDGE COMMUNITY
City of North Branch, Chisago County, MN

FALCON AVENUE N (WATER)

SHEET NO.

C6.7

N:\Projects Current\22-0030.02 Belsher North Branch Plat\Civil\CAD Files\NB Utility.dwg 4/24/2025 3:11 PM

CEDAR RIDGE COMMUNITY SERVICE INFORMATION

Lot Design			Elevation Information		Sanitary Service							
Block	Lot	House Type	Basement	Street	Wye Sta.	Dist. From Down MH	Main Inv.	Length	Riser Height	End Inv.	Basement to End Inv.	Diam. & Mat.
1	1	SOG	912.8	382ND DRIVE	1+13.2	272	899.34	42.0	**2**	902.85	9.95	4" PVC SDR-26
1	2	SOG	913.0	382ND DRIVE	1+76.0	209	899.08	37.5	**3**	903.50	9.50	4" PVC SDR-26
1	3	SOG	913.2	382nd DRIVE	2+29.7	156	898.86	42.6	**3**	903.38	9.82	4" PVC SDR-26
1	4	SOG	913.2	382nd DRIVE	2+80.7	105	898.65	51.2	**3**	903.34	9.86	4" PVC SDR-26
1	5	SOG	913.4	382nd DRIVE	3+36.3	51	898.42	51.8	**3**	903.13	10.27	4" PVC SDR-26
1	6	SOG	913.6	382nd DRIVE	4+17.3	29	888.01	47.5	**14**	903.63	9.97	4" PVC SDR-26
1	7	SOG	913.4	382nd DRIVE	4+59.0	71	888.19	49.6	**14**	903.85	9.55	4" PVC SDR-26
1	8	SOG	913.2	382nd DRIVE	5+00.2	111	888.35	46.1	**14**	903.94	9.26	4" PVC SDR-26
1	9	SOG	912.8	382nd DRIVE	5+42.0	22	888.63	47.4	**13**	903.25	9.55	4" PVC SDR-26
1	10	SOG	912.6	382nd DRIVE	5+89.6	70	888.82	49.5	**13**	903.48	9.12	4" PVC SDR-26
1	11	FB	904.4	FARNHAM CT	0+71.5	69	897.29	43.0	0	898.82	5.58	4" PVC SDR-26
1	12	FB	904.0	FARNHAM CT	1+24.2	122	897.50	43.0	0	899.03	4.97	4" PVC SDR-26
1	13	FB	903.8	FARNHAM CT	1+75.31	172	897.71	43.0	0	899.24	4.56	4" PVC SDR-26
1	14	FB	903.8	FARNHAM CT	2+32.3	230	897.94	43.0	0	899.47	4.33	4" PVC SDR-26
1	15	FB	903.8	FARNHAM CT	2+79.1	277	898.13	43.0	0	899.66	4.14	4" PVC SDR-26
1	16	FB	904.0	FARNHAM CT	3+30.9	328	898.34	43.0	0	899.87	4.13	4" PVC SDR-26
1	17	FB	905.0	FARNHAM CT	4+42.2	21	898.90	82.1	0	901.21	3.79	4" PVC SDR-26
1	18	FB	905.6	FARNHAM CT	4+84.3	63	899.08	82.7	0	901.40	4.20	4" PVC SDR-26
1	19	SOG	913.6	FARNHAM CT	4+88.07	67	899.10	74.8	**2**	903.27	10.33	4" PVC SDR-26
1	20	SOG	913.4	FARNHAM CT	5+05.9	85	899.17	51.3	**3**	903.87	9.53	4" PVC SDR-26
1	21	FB	904.8	FARNHAM CT	4+98.5	78	899.14	54.4	0	900.90	3.90	4" PVC SDR-26
1	22	FB	904.8	FARNHAM CT	4+77.2	56	899.05	68.5	0	901.09	3.71	4" PVC SDR-26
1	23	FB	904.8	FARNHAM CT	4+55.1	34	898.96	68.0	0	900.99	3.81	4" PVC SDR-26
1	24	FB	904.6	FARNHAM CT	4+26.0	4	898.83	48.6	0	900.47	4.13	4" PVC SDR-26
1	25	FB	904.4	FARNHAM CT	3+89.1	387	898.58	43.0	0	900.11	4.29	4" PVC SDR-26
1	26	FB	904.2	FARNHAM CT	3+42.8	340	898.39	43.0	0	899.92	4.28	4" PVC SDR-26
1	27	FB	904.0	FARNHAM CT	2+92.7	290	898.19	43.0	0	899.72	4.28	4" PVC SDR-26
1	28	FB	903.8	FARNHAM CT	2+39.4	237	897.97	43.0	0	899.50	4.30	4" PVC SDR-27
1	29	FB	903.8	FARNHAM CT	1+87.5	185	897.76	43.0	0	899.29	4.51	4" PVC SDR-26
1	30	FB	904.0	FARNHAM CT	1+35.8	133	897.55	43.0	0	899.08	4.92	4" PVC SDR-26
1	31	FB	904.4	FARNHAM CT	0+82.5	80	897.33	43.0	0	898.86	5.54	4" PVC SDR-26
3	1	FB	907.0	379TH STREET	0+97.7	199	901.44	43.0	0	902.97	4.03	4" PVC SDR-26
3	2	FB	906.8	379TH STREET	1+70.5	125	900.89	43.0	0	902.42	4.38	4" PVC SDR-26
3	3	FB	906.6	379TH STREET	2+35.4	61	900.38	43.0	0	901.91	4.69	4" PVC SDR-26
3	4	SOG	914.5	FALLCREST CT	2+03.8	201	902.05	75.9	0	904.24	10.26	4" PVC SDR-26
3	5	SOG	914.5	FALLCREST CT	2+27.7	225	902.30	73.3	0	904.44	10.06	4" PVC SDR-26
3	6	SOG	915.2	FALLCREST CT	2+32.8	230	902.36	65.7	0	904.34	10.86	4" PVC SDR-26
3	7	FB	907.2	FALLCREST CT	2+39.7	237	902.46	56.8	0	904.27	2.93	4" PVC SDR-26
3	8	FB	907.2	FALLCREST CT	2+41.6	239	902.45	62.5	0	904.37	2.83	4" PVC SDR-27
3	9	FB	907.5	FALLCREST CT	2+12.9	210	902.14	76.6	0	904.34	3.16	4" PVC SDR-28
3	10	FB	906.9	FALLCREST CT	1+85.4	182	901.85	68.6	0	903.89	3.01	4" PVC SDR-29
3	11	FB	905.3	379TH STREET	3+84.8	84	899.09	52.5	0	900.81	4.49	4" PVC SDR-26
3	12	FB	905.0	379TH STREET	4+34.7	123	898.66	51.8	0	900.37	4.63	4" PVC SDR-26
3	13	FB	904.2	379TH STREET	4+85.4	183	898.25	47.7	0	899.87	4.33	4" PVC SDR-26
3	14	FB	903.6	379TH STREET	5+39.8	237	897.80	43.0	0	899.33	4.27	4" PVC SDR-26
3	15	FB	902.5	FALK AVE	17+00	13	895.76	42.0	0	897.27	5.23	4" PVC SDR-26
3	16	FB	903.0	FALK AVE	16+36.3	348	895.41	43.0	0	896.94	6.06	4" PVC SDR-27
3	17	FB	903.2	FALK AVE	15+84.3	296	895.20	43.0	0	896.73	6.47	4" PVC SDR-28
3	18	FB	903.5	FALK AVE	15+32.1	244	894.99	43.3	0	896.53	6.97	4" PVC SDR-29
3	19	FB	904.0	FALK AVE	14+80.2	191	894.78	43.4	0	896.32	7.68	4" PVC SDR-30
3	20	FB	904.0	FALK AVE	14+29.1	141	894.58	43.5	0	896.12	7.88	4" PVC SDR-31
3	21	FB	903.4	FALK AVE	13+75.6	87	894.36	43.7	0	895.90	7.50	4" PVC SDR-32
4	1	SOG	910.9	FALK AVE	19+47.5	112	896.98	43.0	**3**	901.51	9.39	4" PVC SDR-33
4	2	SOG	910.6	FALK AVE	19+04.7	68	896.80	43.0	**3**	901.33	9.27	4" PVC SDR-34
4	3	SOG	910.4	FALK AVE	18+52.0	16	896.58	43.0	**3**	901.11	9.29	4" PVC SDR-35
4	4	SOG	910.1	FALK AVE	18+20.5	46	896.35	43.5	**3**	900.89	9.21	4" PVC SDR-36
4	5	SOG	910.1	FALK AVE	17+47.3	60	895.95	44.5	**3**	900.51	9.59	4" PVC SDR-37
4	6	SOG	910.1	FALK AVE	17+05.5	416	895.79	44.5	**3**	900.35	9.75	4" PVC SDR-38
4	7	SOG	910.6	FALK AVE	16+45.4	356	895.44	43.1	**4**	900.97	9.63	4" PVC SDR-39
4	8	SOG	910.6	FALK AVE	15+93.2	303	895.24	43.0	**4**	900.77	9.83	4" PVC SDR-40
4	9	SOG	910.8	FALK AVE	15+39.3	250	895.02	42.7	**5**	901.54	9.26	4" PVC SDR-41
4	10	SOG	911.2	FALK AVE	14+87.0	198	894.81	42.6	**5**	901.33	9.87	4" PVC SDR-42
4	11	SOG	911.2	FALK AVE	14+38.5	150	894.61	42.5	**6**	902.13	9.07	4" PVC SDR-43
5	1	FB	906.0	379TH STREET	1+04.0	192	901.39	43.0	0	902.92	3.08	4" PVC SDR-44
5	2	FB	905.8	379TH STREET	1+79.5	117	900.81	43.0	0	902.34	3.46	4" PVC SDR-45
5	3	FB	905.6	379th STREET	2+31.7	64	900.42	43.0	0	901.95	3.65	4" PVC SDR-46
5	4	FB	905.4	379th STREET	2+82.6	14	900.02	43.0	0	901.55	3.85	4" PVC SDR-47
5	5	FB	905.0	379th STREET	3+33.1	263	899.51	38.0	0	900.94	4.06	4" PVC SDR-48
5	6	FB	904.6	379th STREET	3+92.8	203	899.03	34.2	0	900.38	4.22	4" PVC SDR-49
5	7	FB	904.4	379th STREET	4+44.8	153	898.59	34.2	0	899.94	4.46	4" PVC SDR-50
5	8	FB	904.2	379th STREET	4+97.1	100	898.15	38.8	0	899.60	4.60	4" PVC SDR-51
5	9	FB	904.0	379th STREET	5+52.2	45	897.69	43.0	0	899.22	4.78	4" PVC SDR-52
5	10	FB	903.6	379th STREET	5+95.5	2	897.34	43.1	0	898.87	4.73	4" PVC SDR-53
5	11	FB	903.0	379th STREET	6+53.9	116	896.98	44.6	0	898.54	4.46	4" PVC SDR-54
5	12	FB	902.6	379th STREET	7+04.7	66	896.78	43.7	0	898.32	4.28	4" PVC SDR-55

REV NO.	DATE	DESCRIPTION
1	04/01/2025	REVISION PER CITY REVIEW
2	04/24/2025	REVISION PER CITY REVIEW

DATE: 04/24/2025
DESIGN BY: MJM
DRAWN BY: MJM
CHECKED BY: CJD
DWG FILE: DETAILS
FILE NO.: 22-0030.00

I hereby certify that this plan, specification, or report was prepared by me or under my direct supervision and that I am a duly Licensed Professional Engineer under the laws of the State of Minnesota.

NOT FOR CONSTRUCTION

Signed: Christopher J. Dahn

Date: Lic. No. 58628

BOGART, PEDERSON & ASSOCIATES, INC.
LAND SURVEYING
CIVIL ENGINEERING
ENVIRONMENTAL SERVICES
13076 FIRST STREET, BECKER, MN 55308-9322
TEL: 763-262-9622 FAX: 763-262-9644

CEDAR RIDGE COMMUNITY LLC
CEDAR RIDGE COMMUNITY
City of North Branch, Chisago County, MN

SERVICE INFORMATION

SHEET NO.

C6.8

4/24/2025 3:12 PM N:\Projects Current\22-0030.02 Belzer North Branch\Plan\Civil\CAD Files\NB Cover Sht\PP9-9.dwg

LEGEND:

- SAWCUT LOCATION (FULL DEPTH)
- TURN ARROW (TYPICAL)
- STRAIGHT ARROW (TYPICAL)
- PERMANENT SIGNAGE
- 980.50 TP — NEW TOP OF PAVEMENT ELEVATION

TURN LANE NOTES:

1. THE CONTRACTOR SHALL NOTE ANY DISCREPANCIES BETWEEN EXISTING CONDITIONS IN THE FIELD REPRESENTED WITHIN THE PLANS AS SHOWN AND ALERT THE ENGINEER BEFORE BIDDING THE PROJECT AND BEGINNING CONSTRUCTION.
2. CONTRACTOR SHALL LOCATE AND VERIFY ALL UTILITIES WHICH MAY AFFECT THIS WORK AND NOTIFY THE OWNER OF ANY CHANGES. CONTACT LOCAL UTILITY COMPANIES FOR EXACT LOCATIONS PRIOR TO BIDDING THE PROJECT AND COMMENCING WORK.
3. CONTRACTOR SHALL TAKE NECESSARY PRECAUTIONS TO PREVENT SILT AND DEBRIS RUN-OFF DURING GRADING OPERATIONS (I.E. SILT FENCE, STRAW BALES, ETC.).
4. CONTRACTOR SHALL VERIFY CRITICAL ELEVATIONS TO ENSURE CONFORMANCE WITH GRADING PLAN, PARTICULARLY WITH EXISTING STRUCTURES AND/OR PAVEMENTS TO REMAIN. MEET EXISTING GRADES ALONG STREETS, PROPERTY LINES, AND DRIVEWAY ENTRANCES. RESTORE ALL PAVEMENTS THAT REMAIN TO THEIR ORIGINAL IF NOT BETTER CONDITION. NOTIFY OWNER OF ANY CONFLICTS PRIOR TO BIDDING THE PROJECT.
5. LONGITUDINAL PAVEMENT MARKINGS SHALL BE LATEX PAINT. THE TURN ARROWS SHALL BE PREFORMED THERMO.
6. EXISTING CONFLICTING PAVEMENT MARKINGS WILL NEED TO BE REMOVED BEFORE FINAL PERMANENT STRIPING IS PLACED.
7. DURING CONSTRUCTION, CONFLICTING PAVEMENT MARKINGS WILL NEED TO BE COVERED WITH BLACK REMOVABLE LANE TAPE OR WATER BLASTED AND THEN HAVE PAVEMENT MARKINGS INSTALLED FOR TEMPORARY CENTERLINE DURING CONSTRUCTION.
8. ALL SIGNAGE TO MEET MASH-16 REQUIREMENTS.

0' 50' 100'
SCALE: 1"=50'

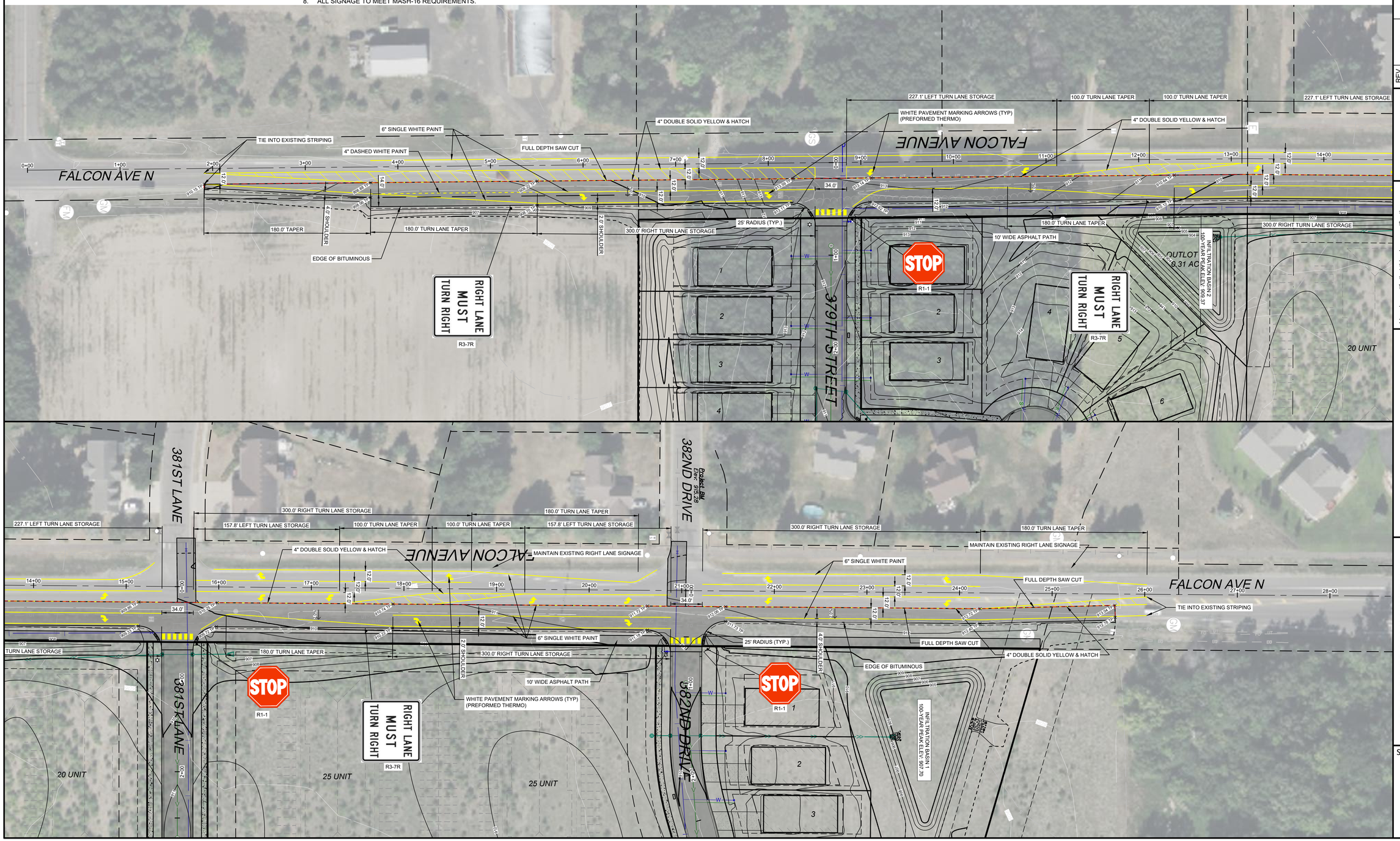

REV NO.	DATE	DESCRIPTION
1	04/01/2025	REVISION PER CITY REVIEW
2	04/24/2025	REVISION PER CITY REVIEW

DATE: 04/24/2025
DESIGN BY: MJM
DRAWN BY: MJM
CHECKED BY: CJD
DWG FILE: EROSION
FILE NO.: 22-0030.00

I hereby certify that this plan, specification, or report was prepared by me or under my direct supervision and that I am a duly Licensed Professional Engineer under the laws of the State of Minnesota.

Signed: Christopher J. Dahn
Date: Lic. No. 58628

NOT FOR CONSTRUCTION

BOGART, PEDERSON & ASSOCIATES, INC.
LAND SURVEYING
CIVIL ENGINEERING
ENVIRONMENTAL SERVICES
13076 FIRST STREET, BECKER, MN 55308-9322
TEL: 763-262-9322 FAX: 763-262-3844

CEDAR RIDGE COMMUNITY LLC
CEDAR RIDGE COMMUNITY
City of North Branch, Chisago County, MN

TURN LANE PLAN

SHEET NO.
C7.1

LEGEND:

- TYPE II CHANNELIZER DRUMS
- SIGN

0' 100' 200'
SCALE: 1"=100'

TRAFFIC CONTROL PLAN NOTES:

1. SIGNS TO FOLLOW CONVENTIONAL ROAD SIZINGS (36" X 36" COMMON)
2. TRAFFIC CONTROL SHALL MEET THE MINNESOTA MANUAL ON UNIFORM TRAFFIC CONTROL.
3. ALL TEMPORARY TRAFFIC CONTROL SIGNS TO BE ON SKIDS.
4. ADDITIONAL SIGNS AND CHANNELIZERS SHALL BE SUPPLIED AND MOVED BY CONTRACTOR AS NEEDED FOR SAFE ROAD CONSTRUCTION.
5. CONTRACTOR SHALL PROVIDE ADDITIONAL TRAFFIC CONTROL SIGNS, CHANNELIZERS, AND FLAGGERS AS NEEDED.
6. EXISTING CONFLICTING PAVEMENT MARKINGS WILL NEED TO BE REMOVED BEFORE FINAL PERMANENT STRIPING IS PLACED.
7. DURING CONSTRUCTION, CONFLICTING PAVEMENT MARKINGS WILL NEED TO BE COVERED WITH BLACK REMOVABLE LANE TAPE OR WATER BLASTED AND THEN HAVE PAVEMENT MARKINGS INSTALLED FOR TEMPORARY CENTERLINE DURING CONSTRUCTION.

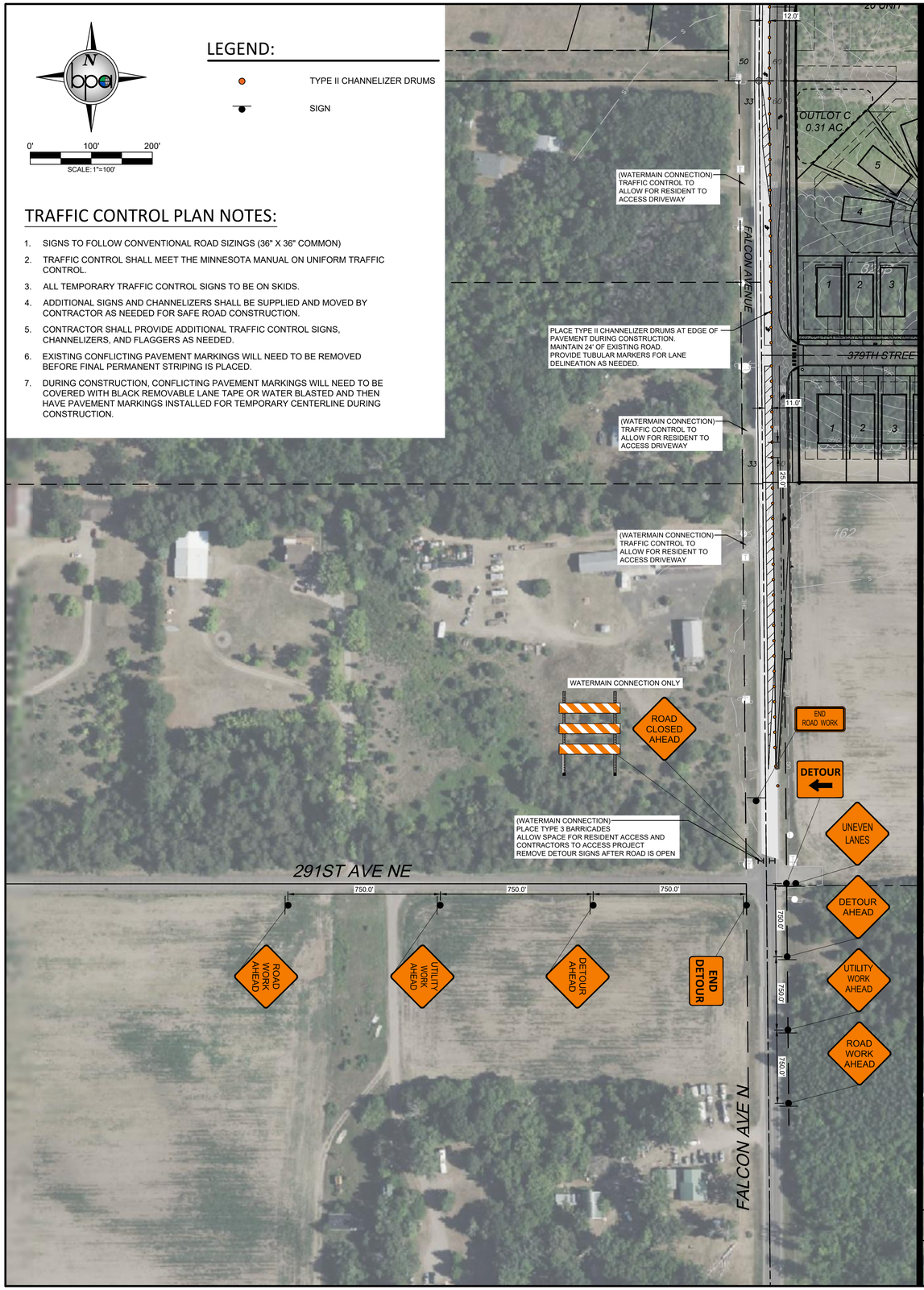

REV NO.	DATE	DESCRIPTION
1	04/01/2025	REVISION PER CITY REVIEW
2	04/24/2025	REVISION PER CITY REVIEW

DATE: 04/24/2025
DESIGN BY: MJM
DRAWN BY: MJM
CHECKED BY: CJD
DWG FILE: SITE BASE
FILE NO.: 22-0030.00

I hereby certify that this plan, specification, or report was prepared by me or under my direct supervision and that I am a duly Licensed Professional Engineer under the laws of the State of Minnesota.

NOT FOR CONSTRUCTION

Signed: Christopher J. Dahn
Date: Lic. No. 58628

BOGART, PEDERSON & ASSOCIATES, INC.
LAND SURVEYING
CIVIL ENGINEERING
ENVIRONMENTAL SERVICES
13076 FIRST STREET, BECKER, MN 55308-9322
TEL: 763-262-9322 FAX: 763-262-3844

CEDAR RIDGE COMMUNITY LLC
CEDAR RIDGE COMMUNITY
City of North Branch, Chisago County, MN

TRAFFIC CONTROL PLAN (TURN LANE)

SHEET NO.
C7.2

4/24/2025 3:13 PM N:\Projects Current\22-0030.00 Belcher North Branch Plat\Civil\CAD Files\NB Traffic Control.dwg

REV NO.	DATE	DESCRIPTION
1	04/01/2025	REVISION PER CITY REVIEW
2	04/24/2025	REVISION PER CITY REVIEW

DATE: 04/24/2025
DESIGN BY: MJM
DRAWN BY: MJM
CHECKED BY: CJD
DWG FILE: SITE BASE
FILE NO.: 22-0030.00

I hereby certify that this plan, specification, or report was prepared by me or under my direct supervision and that I am a duly Licensed Professional Engineer under the laws of the State of Minnesota.

NOT FOR CONSTRUCTION

Signed: Christopher J. Dahn

Date: Lic. No. 58628

BOGART, PEDERSON & ASSOCIATES, INC.
LAND SURVEYING
CIVIL ENGINEERING
ENVIRONMENTAL SERVICES
13076 FIRST STREET, BECKER, MN 55308-9322
TEL: 763-262-9322 FAX: 763-262-3844

CEDAR RIDGE COMMUNITY LLC
CEDAR RIDGE COMMUNITY
City of North Branch, Chisago County, MN

TRAFFIC CONTROL PLAN (DETOUR)

SHEET NO.

C7.3

4/24/2025 3:13 PM N:\Projects Current\22-0030.00 Belcher North Branch Plat\Civil\CAD Files\NB Traffic Control.dwg

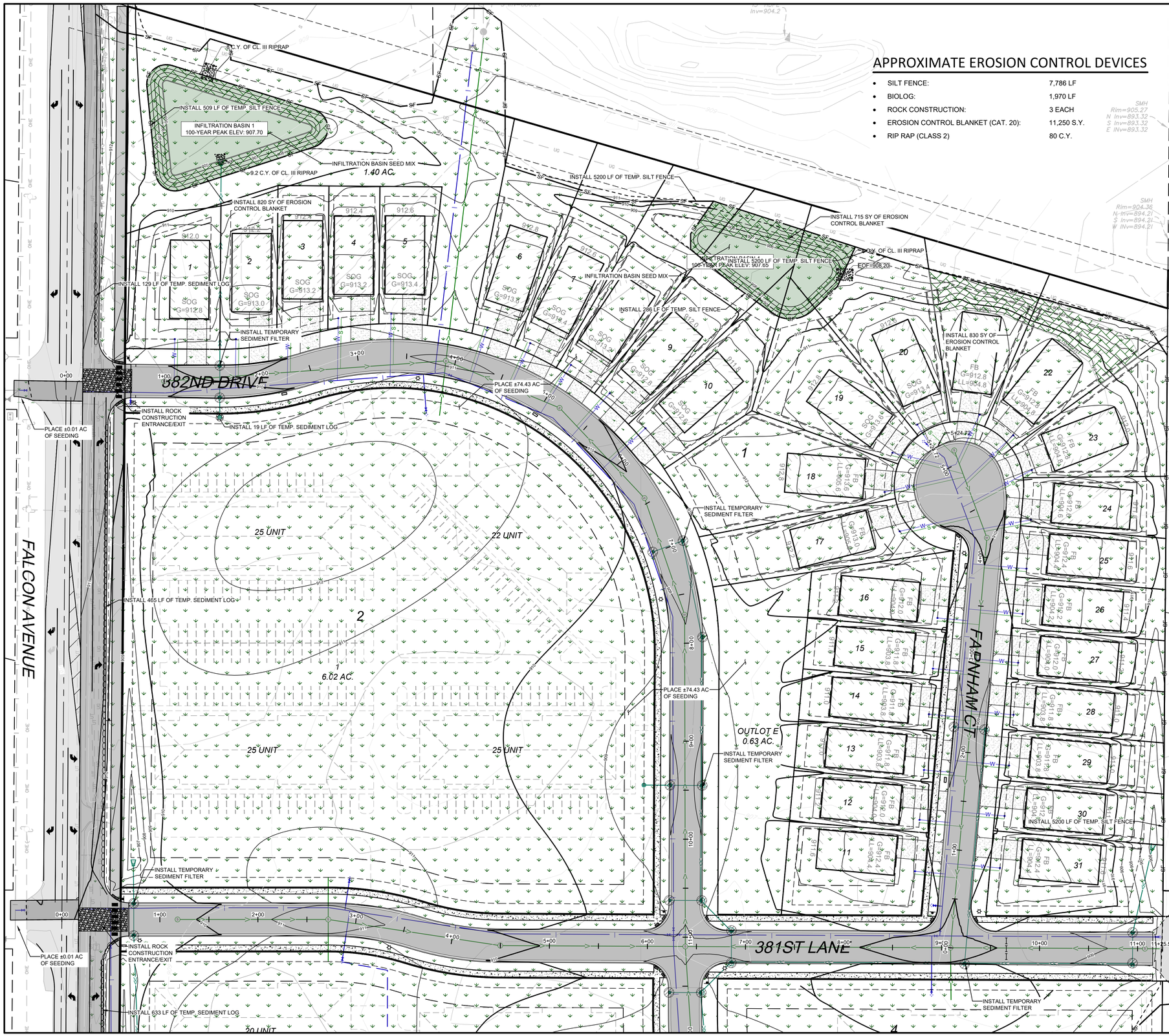

APPROXIMATE EROSION CONTROL DEVICES

• SILT FENCE:	7,786 LF
• BIOLOG:	1,970 LF
• ROCK CONSTRUCTION:	3 EACH
• EROSION CONTROL BLANKET (CAT. 20):	11,250 S.Y.
• RIP RAP (CLASS 2)	80 C.Y.

0' 50' 100'
SCALE: 1"=50'

LEGEND:

- TEMPORARY ROCK CONSTRUCTION ENTRANCE
- EROSION CONTROL BLANKET (CAT. 20)
- SF — GRADING LIMITS AND PROPOSED TEMPORARY SILT FENCE
- FIBER-LOG ROLLS
- PROPOSED RIP RAP
- 984 — PROPOSED CONTOUR
- E.O.F. — EMERGENCY OVERFLOW
- TEMPORARY SEDIMENT FILTER- HIGH FLOW

EROSION CONTROL NOTES:

1. CONTRACTOR SHALL CONFINE CONSTRUCTION OPERATIONS TO THE CONSTRUCTION/GRADING LIMITS SHOWN.
2. ALL WORK SHALL CONFORM TO THE MINNESOTA POLLUTION CONTROL AGENCY'S STORM WATER PERMIT REQUIREMENTS. CONTRACTOR SHALL OBTAIN ALL PERMITS AND COMPLY WITH ALL PERMIT REQUIREMENTS.
3. THE SITE SOIL EROSION AND SEDIMENT CONTROL FACILITIES SHALL BE INSTALLED PRIOR TO ANY DEMOLITION OR GRADING OPERATIONS AND MAINTAINED TO CONFORM WITH THE STANDARDS SPECIFIED BY THE PERMIT.
4. CONTRACTOR SHALL INSPECT TEMPORARY EROSION CONTROL MEASURES ON THE ENTIRE SITE AT LEAST EVERY 7 DAYS AND WITHIN 24 HOURS OF ANY MEASURABLE RAINSTORM. DAMAGED SILT FENCE OR OTHER EROSION CONTROL DEVICES OR PRACTICES SHALL BE REPAIRED IMMEDIATELY. INSPECTION AND MAINTENANCE OF DEVICES SHALL CONTINUE UNTIL THE SITE HAS UNDERGONE FINAL STABILIZATION AND A NOTICE OF TERMINATION IS SUBMITTED TO THE MPCA.
5. ALL GRADING OPERATIONS SHALL BE CONDUCTED IN A MANNER TO MINIMIZE THE POTENTIAL FOR SITE EROSION.
6. THE SITE SOIL EROSION AND SEDIMENT CONTROL FACILITIES SHALL BE INSTALLED AND MAINTAINED TO CONFORM WITH THE STANDARDS SPECIFIED BY THE CITY OF NORTH BRANCH AND THE MPCA.
7. EROSION CONTROL MEASURES SHALL BE INSTALLED PRIOR TO THE DISTURBANCE OF ANY AREAS AND MAINTAINED UNTIL ALL TRIBUTARY DISTURBED AREAS ARE RESTORED.
8. THE CONTRACTOR SHALL BE RESPONSIBLE FOR THE REMOVAL OF ALL EROSION CONTROL MEASURES, INCLUDING SILT FENCE AND BALES, UPON ESTABLISHMENT OF PERMANENT VEGETATION IN SAID AREAS.
9. ALL SOILS TRACKED ONTO PAVEMENT OR ANY OTHER OFF-SITE AREA SHALL BE REMOVED DAILY.
10. THE SITE SEDIMENT CONTROL FACILITIES FOR THE PROJECT MUST BE INSTALLED PRIOR TO ANY GRADING OPERATION.
11. ALL AREAS DISTURBED DURING CONSTRUCTION SHALL BE RESTORED AND VEGETATED AS SOON AS POSSIBLE. ANY FINISHED AREAS SHALL BE SEEDED AND MULCHED WITHIN 7 DAYS AFTER FINISHED GRADING IS COMPLETED IN ACCORDANCE TO MN/DOT 2575.
12. ALL DISTURBED AREAS SHALL BE REVEGETATED WITH MN/DOT SEED MIX, MULCHED, FERTILIZED & DISK ANCHORED, PER THE FOLLOWING SCHEDULE:

STANDARD SEED MIX 25-131:	220 LB/AC.
INFILTRATION BASIN SEED MIX 33-261:	35 LB/AC.
FERTILIZER 22-5-10:	350 LB/AC.
MULCH TYPE 3:	2 TONS/AC.

13. CONTRACTOR SHALL INSTALL TEMPORARY SEDIMENT BMP'S SHOWN AND NOT SHOWN ON PLANS DURING PHASING ON PROJECT TO COMPLY WITH MPCA, CITY INSPECTOR AND DEVELOPER REQUEST.

REV NO.	DATE	DESCRIPTION
1	04/01/2025	REVISION PER CITY REVIEW
2	04/24/2025	REVISION PER CITY REVIEW

DATE: 04/24/2025
DESIGN BY: MJM
DRAWN BY: MJM
CHECKED BY: CJD
DWG FILE: EROSION
FILE NO.: 22-0030.00

I hereby certify that this plan, specification, or report was prepared by me or under my direct supervision and that I am a duly Licensed Professional Engineer under the laws of the State of Minnesota.

NOT FOR CONSTRUCTION

Signed: Christopher J. Dahn
Date: Lic. No. 58628

BOGART, PEDERSON & ASSOCIATES, INC.
LAND SURVEYING
CIVIL ENGINEERING
ENVIRONMENTAL SERVICES
13070 FIRST STREET, BECKER, MN 55308-9322
TEL: 763-206-3822 FAX: 763-262-5844

CEDAR RIDGE COMMUNITY LLC
CEDAR RIDGE COMMUNITY
City of North Branch, Chisago County, MN

NORTH EROSION CONTROL PLAN

SHEET NO.
C8.1

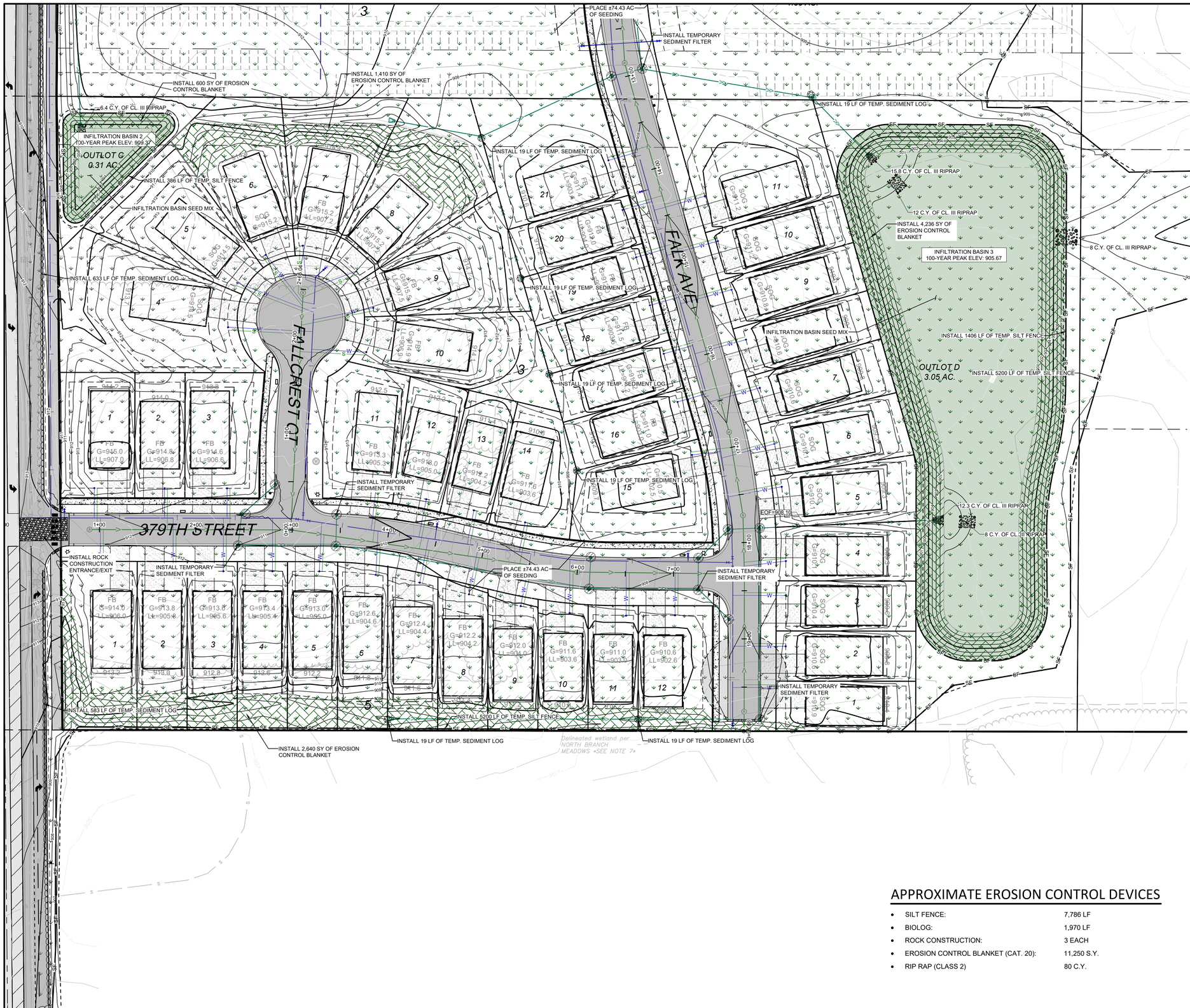

LEGEND:

- TEMPORARY ROCK CONSTRUCTION ENTRANCE
- EROSION CONTROL BLANKET (CAT. 20)
- SF — GRADING LIMITS AND PROPOSED TEMPORARY SILT FENCE
- FIBER-LOG ROLLS
- PROPOSED RIP RAP
- 984 — PROPOSED CONTOUR
- E.O.F. — EMERGENCY OVERFLOW
- TEMPORARY SEDIMENT FILTER- HIGH FLOW

EROSION CONTROL NOTES:

1. CONTRACTOR SHALL CONFINE CONSTRUCTION OPERATIONS TO THE CONSTRUCTION/GRADING LIMITS SHOWN.
2. ALL WORK SHALL CONFORM TO THE MINNESOTA POLLUTION CONTROL AGENCY'S STORM WATER PERMIT REQUIREMENTS. CONTRACTOR SHALL OBTAIN ALL PERMITS AND COMPLY WITH ALL PERMIT REQUIREMENTS.
3. THE SITE SOIL EROSION AND SEDIMENT CONTROL FACILITIES SHALL BE INSTALLED PRIOR TO ANY DEMOLITION OR GRADING OPERATIONS AND MAINTAINED TO CONFORM WITH THE STANDARDS SPECIFIED BY THE PERMIT.
4. CONTRACTOR SHALL INSPECT TEMPORARY EROSION CONTROL MEASURES ON THE ENTIRE SITE AT LEAST EVERY 7 DAYS AND WITHIN 24 HOURS OF ANY MEASURABLE RAINSTORM. DAMAGED SILT FENCE OR OTHER EROSION CONTROL DEVICES OR PRACTICES SHALL BE REPAIRED IMMEDIATELY. INSPECTION AND MAINTENANCE OF DEVICES SHALL CONTINUE UNTIL THE SITE HAS UNDERGONE FINAL STABILIZATION AND A NOTICE OF TERMINATION IS SUBMITTED TO THE MPCA.
5. ALL GRADING OPERATIONS SHALL BE CONDUCTED IN A MANNER TO MINIMIZE THE POTENTIAL FOR SITE EROSION.
6. THE SITE SOIL EROSION AND SEDIMENT CONTROL FACILITIES SHALL BE INSTALLED AND MAINTAINED TO CONFORM WITH THE STANDARDS SPECIFIED BY THE CITY OF NORTH BRANCH AND THE MPCA.
7. EROSION CONTROL MEASURES SHALL BE INSTALLED PRIOR TO THE DISTURBANCE OF ANY AREAS AND MAINTAINED UNTIL ALL TRIBUTARY DISTURBED AREAS ARE RESTORED.
8. THE CONTRACTOR SHALL BE RESPONSIBLE FOR THE REMOVAL OF ALL EROSION CONTROL MEASURES, INCLUDING SILT FENCE AND BALES, UPON ESTABLISHMENT OF PERMANENT VEGETATION IN SAID AREAS.
9. ALL SOILS TRACKED ONTO PAVEMENT OR ANY OTHER OFF-SITE AREA SHALL BE REMOVED DAILY.
10. THE SITE SEDIMENT CONTROL FACILITIES FOR THE PROJECT MUST BE INSTALLED PRIOR TO ANY GRADING OPERATION.
11. ALL AREAS DISTURBED DURING CONSTRUCTION SHALL BE RESTORED AND VEGETATED AS SOON AS POSSIBLE. ANY FINISHED AREAS SHALL BE SEEDED AND MULCHED WITHIN 7 DAYS AFTER FINISHED GRADING IS COMPLETED IN ACCORDANCE TO MN/DOT 2575.
12. ALL DISTURBED AREAS SHALL BE REVEGETATED WITH MN/DOT SEED MIX, MULCHED, FERTILIZED & DISK ANCHORED, PER THE FOLLOWING SCHEDULE:

STANDARD SEED MIX 25-131:	220 LB/AC.
INFILTRATION BASIN SEED MIX 33-261:	35 LB/AC.
FERTILIZER 22-5-10:	350 LB/AC.
MULCH TYPE 3:	2 TONS/AC.

13. CONTRACTOR SHALL INSTALL TEMPORARY SEDIMENT BMP'S SHOWN AND NOT SHOWN ON PLANS DURING PHASING ON PROJECT TO COMPLY WITH MPCA, CITY INSPECTOR AND DEVELOPER REQUEST.

APPROXIMATE EROSION CONTROL DEVICES

• SILT FENCE:	7,786 LF
• BIOLOG:	1,970 LF
• ROCK CONSTRUCTION:	3 EACH
• EROSION CONTROL BLANKET (CAT. 20):	11,250 S.Y.
• RIP RAP (CLASS 2)	80 C.Y.

REV NO.	DATE	DESCRIPTION
1	04/01/2025	REVISION PER CITY REVIEW
2	04/24/2025	REVISION PER CITY REVIEW

DATE: 04/24/2025
DESIGN BY: MJM
DRAWN BY: MJM
CHECKED BY: CJD
DWG FILE: EROSION
FILE NO.: 22-0030.00

I hereby certify that this plan, specification, or report was prepared by me or under my direct supervision and that I am a duly Licensed Professional Engineer under the laws of the State of Minnesota.

NOT FOR CONSTRUCTION

Signed: Christopher J. Dahn
Date: Lic. No. 58628

BOGART, PEDERSON & ASSOCIATES, INC.
LAND SURVEYING
CIVIL ENGINEERING
ENVIRONMENTAL SERVICES
13076 FIRST STREET, BECKER, MN 55308-9322
TEL: 763-262-9822 FAX: 763-262-9844

CEDAR RIDGE COMMUNITY LLC
CEDAR RIDGE COMMUNITY
City of North Branch, Chisago County, MN

SOUTH EROSION CONTROL PLAN

SHEET NO.
C8.2

STORM WATER POLLUTION PREVENTION PLAN NARRATIVE:

GENERAL INFORMATION

THIS STORMWATER POLLUTION PREVENTION PLAN IS PREPARED IN ACCORDANCE TO THE NATIONAL POLLUTANT DISCHARGE ELIMINATION SYSTEM PERMIT NO. MN R1000001 FOR STORMWATER DISCHARGES ASSOCIATED WITH CONSTRUCTION ACTIVITY.
PROJECT NAME: CEDAR RIDGE COMMUNITY
LOCATION: FALCON AVE N, NORTH BRANCH MN. 55056
CHISAGO COUNTY
LAT/LONG: 45.501044, -93.000047

DESCRIPTION OF CONSTRUCTION ACTIVITY:

DEVELOPMENT CONSISTS OF PAVING, GRADING, UTILITY INSTALLATION, AND TURF ESTABLISHMENT.

PROJECT CONTACTS

CEDAR RIDGE COMMUNITY LLC AND THE CONTRACTOR ARE RESPONSIBLE FOR IMPLEMENTATION OF THE SWPPP AND THE INSTALLATION, INSPECTION, AND MAINTENANCE OF THE EROSION PREVENTION AND SEDIMENT CONTROL BMP'S BEFORE AND DURING CONSTRUCTION.

SWPPP PREPARATION:
SWPPP PREPARER: MICHAEL MORDAL-HUEBSCH
-BOGART, PEDERSON & ASSOCIATES
TRAINING: ENGINEER AND SWPPP DESIGNER (EXP 2023)
ADDRESS: 13076 FIRST STREET
BECKER, MN 53308-9322
TELEPHONE: 763-262-8822
EMAIL; CDAHN@BOGART-PEDERSON,COM
OWNER:
OWNER CONTACT: JASON BETZLER
ADDRESS: 12222 313TH AVE, PRINCETON, MN 55371
TELEPHONE: (763)-360-1453
EMAIL; MILLELACSWALLEYE@LIVE.COM

CONTRACTOR (TO BE FILLED OUT BY THE CONTRACTOR):
BUSINESS NAME _____
OWNER NAME _____
MAILING ADDRESS _____
CITY _____
TELEPHONE _____
EMAIL _____
CONTACT NAME _____
MAILING ADDRESS _____
CITY _____
TELEPHONE _____
EMAIL _____

ESTIMATED DATES OF CONSTRUCTION:

START DATE ___/___/___ (TO BE FILLED IN BY CONTRACTOR)
COMPLETION DATE ___/___/___ (TO BE FILLED IN BY CONTRACTOR)

PERMANENT STORMWATER DESIGN CALCULATIONS:

SEE THE STORM WATER MANAGEMENT REPORT FOR MORE INFORMATION. CONTACT BOGART, PEDERSON & ASSOCIATES FOR REPORT. PROPOSED FLOW RATE IS LIMITED THROUGH DIRECTING STORM WATER TO FOUR INFILTRATION BASINS.
SOIL GROUP: A

DESCRIPTION OF EROSION CONTROL ACTIVITY:

EROSION CONTROL CONSISTS OF SILT FENCE PERIMETER CONTROL, TURF ESTABLISHMENT THROUGH SEEDING AND EROSION CONTROL BLANKET, AND ROCK CONSTRUCTION ENTRANCE PLACEMENT.

CUMULATIVE IMPERVIOUS SURFACES:

AREA OF DISTURBANCE:	42.6	ACRES
PRE-CONSTRUCTION IMPERVIOUS AREA:	1.49	ACRES
POST CONSTRUCTION IMPERVIOUS AREA:	14.32	ACRES
NEW IMPERVIOUS AREA:	12.83	ACRES

RECEIVING WATERS:

STORM WATER FROM THIS SITE WILL BE DISCHARGED TO THE FOUR INFILTRATION BASINS ON SITE.

PLANS AND SPECIFICATIONS

THE PLAN SHEETS OF THIS PLAN SET INDICATE THE FOLLOWING ITEMS:
- THE PROJECT LOCATION AND CONSTRUCTION LIMITS.
- LOCATIONS OF IMPERVIOUS SURFACES.
- LOCATIONS OF AREAS NOT TO BE DISTURBED (E.G., BUFFER ZONES, WETLANDS, ETC.).
- STEEP SLOPE LOCATIONS.
- LOCATIONS OF ALL TEMPORARY AND PERMANENT EROSION AND SEDIMENT CONTROL BMP'S TO BE INSTALLED ON THE PROJECT.
- THE DETAIL SHEETS INDICATE EROSION AND SEDIMENT CONTROL BMPS TO BE INSTALLED ON THE PROJECT.
- IF DEWATERING IS REQUIRED FOR THIS PROJECT, THE PUMP DISCHARGE SHALL BE TREATED PRIOR TO BEING DISCHARGED OFF-SITE OR INTO A SURFACE WATER. THE DISCHARGE SHALL BE VISUALLY CHECKED TO ENSURE THAT IT IS VISIBLY CLEAN WATER.

TEMPORARY SEDIMENT CONTROL PRACTICES

DOWN GRADIENT SILT FENCE AND SEDIMENT LOG INSTALLATIONS ARE TO BE INPLACE PRIOR TO THE COMMENCEMENT OF ANY EARTHWORK OPERATIONS.

TOPSOIL IS TO BE WINDROWED ALONG THE CONSTRUCTION LIMITS AND PLACED AS SLOPE DRESSING IMMEDIATELY FOLLOWING COMPLETION OF THE GRADING OPERATIONS, AS THE GRADING OPERATIONS PROCEED.

TOPSOIL PLACEMENT ALONG THE EMBANKMENT SLOPES THOUGH THE WETLANDS AREA IS TO BE SPREAD BY A LOW IMPACT CRAWLER TRACTOR OPERATING UP AND DOWN THE SLOPES SO AS TO PROVIDE TRACK PRINTS PARALLEL WITH THE CONTOURS.

INSTALLATION OF MN/DOT CATEGORY 3 EROSION CONTROL BLANKET ALONG THE EMBANKMENT SLOPES ADJACENT THE WETLANDS AREA.

ALL TEMPORARY SOILS STOCKPILES WILL REQUIRE AN EFFECTIVE MEANS OF SEDIMENT CONTROL SUCH AS AN EROSION CONTROL BLANKET COVERING OR SILT FENCE INSTALLATION ALONG THE TOE OF SLOPE.

ALL COMPLETED SWALES SLOPES AND BOTTOMS NOT DRAINING TOWARDS WETLAND AREAS ARE TO BE STABILIZED WITHIN 7 DAYS.

TEMPORARY STABILIZATION WILL BE REQUIRED IN AREAS WHERE GRADING OPERATIONS ARE SUSPENDED OR CEASED FOR A PERIOD OF 7 DAYS OR GREATER.

A ROCK CONSTRUCTION ENTRANCE FOR SEDIMENT CONTROL IS TO BE PROVIDED AT THE PROJECT ENTRANCE ON FALCON AVE N.

STREET SWEEPING OF THE PAVED SURFACES WILL BE REQUIRED AS DIRECTED BY THE ENGINEER.

TIMING OF EROSION CONTROL:

SILT FENCE AND SEDIMENT LOGS WILL BE INSTALLED PRIOR TO CONSTRUCTION.

RIPRAP AND FILTER BLANKET WILL BE PLACED AT THE OUTLETS WITHIN 24 HOURS OF THE OUTLET PLACEMENT.

THE CONTRACTOR MUST STABILIZE ALL EXPOSED SOIL AREAS IMMEDIATELY FOLLOWING CONSTRUCTION WHEREVER CONSTRUCTION WILL NOT OCCUR FOR A PERIOD GREATER THAN OR EQUAL TO 7 DAYS.

STABILIZATION WORK MUST BE COMPLETE WITHIN 7 CALENDAR DAYS AFTER THE CONSTRUCTION WORK IN THAT AREA HAS TEMPORARILY OR PERMANENTLY CEASED.

AREAS THAT ARE WITHIN 200 FT OF A PUBLIC WATER MUST BE STABILIZED WITHIN 24 HOURS OF COMPLETING CONSTRUCTION DURING PERIODS OF "WORK IN WATER RESTRICTIONS" FOR TIME PERIODS DECLARED BY THE DNR.

THE CONTRACTOR IS RESPONSIBLE TO MAINTAIN THE DISTURBED AREA UNTIL VEGETATION IN ESTABLISHED.

ONCE VEGETATION IS ESTABLISHED AND CONSTRUCTION IS COMPLETE, THE SILT FENCE AND ANY OTHER TEMPORARY EROSION CONTROL THAT IS NOT BIODEGRADABLE SHALL BE REMOVED.

STREET SWEEPING TO BE PROVIDED AS DIRECTED BY THE ENGINEER OR OWNER. THE CITY REQUIRES STREET SWEEPING TO OCCUR WITHIN 8 HOURS OF NOTICE FROM THE CITY.

APPLYING MULCH, HYDROMULCH, TACKIFIER, POLYACRYLAMIDE OR SIMILAR EROSION PREVENTION PRACTICES IS NOT ACCEPTABLE STABILIZATION IN ANY PART OF A TEMPORARY OR PERMANENT DRAINAGE DITCH OR SWALE. BLANKETS OR OTHER APPROVED, BY THE ENGINEER, METHOD SHALL BE USED.

INSPECTION AND MAINTENANCE ACTIVITIES

THE CONTRACTOR SHALL BE RESPONSIBLE FOR COORDINATING AND SCHEDULING THE WORK OF ALL OPERATIONS, INCLUDING SUBCONTRACTORS AND UTILITY COMPANIES, SUCH THAT EROSION AND SEDIMENT CONTROL MEASURES ARE FULLY EXECUTED FOR EACH OPERATION AND IN A TIMELY MANNER OVER THE DURATION OF THE PROJECT. OPERATORS HAVE DAILY ACCESS TO THE PROJECT SITE. THE CONTRACTOR SHALL BE FULLY RESPONSIBLE FOR THE SWPPP IMPLEMENTATION UNTIL THE ENTIRE SITE HAS UNDERGONE FINAL STABILIZATION AND N.O.T HAS BEEN SUBMITTED TO THE MPCA.

THE CONTRACTOR IS TO PROVIDE A TRAINED INDIVIDUAL RESPONSIBLE FOR THE IMPLEMENTATION, INSPECTION AND MAINTENANCE OF THE EROSION AND SEDIMENT CONTROL BMPS ON THE PROJECT. THAT INDIVIDUAL IS TO BE IDENTIFIED AT THE PRE-CONSTRUCTION CONFERENCE AND LISTED IN THE MINUTES THEREOF.

THE APPOINTED INDIVIDUAL IS TO PERFORM A ROUTINE INSPECTION OF THE ENTIRE SITE AT LEAST ONCE EVERY SEVEN DAYS DURING CONSTRUCTION OPERATIONS AND WITHIN 24 HOURS AFTER A RAINFALL EVENT GREATER THAN 0.5 INCHES IN 24 HOURS.

A INSPECTION FORM WILL BE PROVIDED BY THE CONTRACTOR. ANY DEFICIENCIES IN THE EROSION AND SEDIMENT CONTROL BMPS ARE TO BE NOTED ON THE INSPECTION FORM AND CORRECTED BY THE END OF THE NEXT BUSINESS DAY.

PERIMETER CONTROL DEVICES ARE TO BE REPAIRED OR REPLACED WHEN THEY ARE NO LONGER EFFECTIVE OR WHEN THE SEDIMENT REACHES ONE-HALF THE HEIGHT OF THE DEVICE.

TRAINING DOCUMENTATION:
SWPPP IMPLEMENTATION, REVISING, AMENDING, AND INSPECTING (TO BE FILLED IN BY THE CONTRACTOR)
NAME OF INDIVIDUAL
OVERSEEING & INSPECTING _____
DATE OF TRAINING _____
NAME OF INSTRUCTOR _____
ENTITY PROVIDING TRAINING _____
CONTENT OF TRAINING _____
TOTAL HOURS OF TRAINING _____

BMP INSTALLATION, MAINTENANCE, AND REPAIR (TO BE FILLED IN BY THE CONTRACTOR)
NAME OF INDIVIDUAL
OVERSEEING & INSPECTING _____
DATE OF TRAINING _____
NAME OF INSTRUCTOR _____
ENTITY PROVIDING TRAINING _____
CONTENT OF TRAINING _____
TOTAL HOURS OF TRAINING _____

POLLUTION PREVENTION

FERTILIZERS ARE TO BE APPLIED ONLY IN THE AMOUNTS AS SPECIFIED AND WORKED INTO THE SOIL TO MINIMIZE EXPOSURE TO STORMWATER RUNOFF.

ONSITE REFUELING OPERATIONS ARE TO BE CONDUCTED WITH CARE. ANY INADVERTENT SPILLAGE OF FUEL OR CHEMICALS IS TO BE IMMEDIATELY CLEANED UP, REMOVED FROM THE SITE AND DISPOSED OF IN ACCORDANCE TO STATE AND LOCAL REGULATIONS. MAJOR SPILLS ARE TO BE REPORTED TO THE MPCA 24 HOUR NOTIFICATION NETWORK AT 800 422 0798. ALL VEHICLES ON-SITE ARE TO BE MONITORED FOR LEAKS AND SUBJECT TO ROUTINE PREVENTIVE MAINTENANCE EFFORTS TO REDUCE THE LIKELIHOOD OF LEAKAGE AND OR SPILLS.

PORTABLE SANITARY WASTE FACILITIES ARE TO BE PROVIDED ONSITE AND EMPTIED ON A BI-WEEKLY BASIS.

CONCRETE BATCH TRUCKS WILL NOT BE ALLOWED TO DISCHARGE DRUM AND CHUTE WASHOUT DIRECTLY ON THE GROUND. A PORTABLE WASHOUT RECEPTACLE IS TO BE PROVIDED BY THE CONTRACTOR AT THE LOCATION AS PROVIDED BY THE OWNER.

FINAL STABILIZATION

FINAL STABILIZATION OCCURS WHEN 70 PERCENT OF THE PERVIOUS AREA IS COVERED WITH UNIFORM, PERMANENT VEGETATION.

ALL TEMPORARY EROSION AND SEDIMENT CONTROL FEATURES ARE TO BE REMOVED AND THE NPDES NOTICE OF TERMINATION IS TO BE PREPARED AND SUBMITTED TO THE MPCA.

LOCATION OF SWPPP REQUIREMENTS IN PROJECT PLAN

DESCRIPTION	TITLE	LOCATION
EROSION CONTROL DETAILS	CONSTRUCTION DETAILS	C9.1-C9.4
EROSION CONTROL LOCATIONS	EROSION CONTROL LOCATIONS	C8.1-C8.2

24 HOUR MPCA EMERGENCY NOTIFICATION:
TELEPHONE NUMBERS: 651-649-5451
800-422-0798

ESTIMATED QUANTITIES:

THE FOLLOWING QUANITITES IS AN ESTIMATED PRELIMINARY AMOUNT REQUIRED FOR SEDIMENT CONTROL BMP'S AT THE START OF THE PROJECT. THIS ESTIMATE IS PROVIDED AS REQUIRED BY THE MINNESOTA POLLUTION CONTROL AGENCY GENERAL STORMWATER PERMIT FOR CONSTRUCTION ACTIVITY. ANY ADDITIONAL AND/OR REPLACEMENT BMP'S QUANTITIES WILL BE FURNISHED AND INSTALLED BY THE CONTRACTOR AT NO ADDITIONAL COST TO THE OWNER.

ESTIMATED PRELIMINARY QUANTITIES AT START OF PROJECT:

ITEM	UNIT	ESTIMATED INITIAL QUANTITY
TEMPORARY CONSTRUCTION ENTRANCE	EA	3
TEMPORARY SEDIMENT FILTER	EA	35
TEMPORARY CONCRETE WASHOUT	EA	1
TEMPORARY PUMP SEDIMENT CONTROL DEVICE	EA	1
TEMPORARY SEDIMENT LOGS	LF	1,970
TEMPORARY SILT FENCE	LF	7,786
EROSION CONTROL BLANKET (CAT. 20)	SY	11,250

TEMPORARY EROSION AND SEDIMENT CONTROL SPECIFICATIONS

PART 1 GENERAL

1.01 SECTION INCLUDES

A. PREVENTION OF SEDIMENTATION OF WATERWAYS, OPEN DRAINAGE WAYS, AND STORM AND SANITARY SEWERS DUE TO CONSTRUCTION ACTIVITIES.

1.02 REFERENCE STANDARDS

A. GENERAL PERMIT AUTHORIZATION TO DISCHARGE STORM WATER ASSOCIATED WITH CONSTRUCTION ACTIVITY UNDER THE NATIONAL POLLUTANT DISCHARGE ELIMINATION SYSTEM. MINNESOTA PERMIT NO: MN R100001.

1.03 PERFORMANCE REQUIREMENTS

A. COMPLY WITH ALL REQUIREMENTS OF THE MINNESOTA POLLUTION CONTROL AGENCY FOR EROSION AND SEDIMENT CONTROL.

B. DO NOT BEGIN CLEARING, GRADING, OR OTHER WORK INVOLVING DISTURBANCE OF GROUND SURFACE COVER UNTIL APPLICABLE PERMITS HAVE BEEN OBTAINED; FURNISH ALL DOCUMENTATION REQUIRED TO OBTAIN APPLICABLE PERMITS.
1. OBTAIN AND PAY FOR PERMITS REQUIRED BY AUTHORITY HAVING JURISDICTION.

C. TIMING: PUT PREVENTIVE MEASURES IN PLACE PRIOR TO DISTURBANCE OF SURFACE COVER AND BEFORE PRECIPITATION OCCURS.

D. EROSION OFF SITE: PREVENT EROSION OF SOIL AND DEPOSITION OF SEDIMENT ON OTHER PROPERTIES CAUSED BY WATER LEAVING THE PROJECT SITE DUE TO CONSTRUCTION ACTIVITIES FOR THIS PROJECT.
1. PREVENT TRACKING OF MUD ONTO PUBLIC ROADS OUTSIDE SITE.
2. PREVENT MUD AND SEDIMENT FROM FLOWING ONTO PAVEMENTS.

E. SEDIMENTATION OF WATERWAYS OFF SITE: PREVENT SEDIMENTATION OF WATERWAYS OFF THE PROJECT SITE, INCLUDING RIVERS, STREAMS, LAKES, PONDS, OPEN DRAINAGE WAYS, STORM SEWERS, AND SANITARY SEWERS.
1. IF SEDIMENTATION OCCURS, INSTALL OR CORRECT PREVENTIVE MEASURES IMMEDIATELY AT NO COST TO OWNER; REMOVE DEPOSITED SEDIMENTS; COMPLY WITH REQUIREMENTS OF AUTHORITIES HAVING JURISDICTION.

F. MAINTENANCE: MAINTAIN TEMPORARY PREVENTIVE MEASURES UNTIL PERMANENT MEASURES HAVE BEEN ESTABLISHED.

PART 2 PRODUCTS

2.01 MATERIALS

A. TEMPORARY SILT FENCE: WOVEN POLYPROPYLENE GEOTEXTILE RESISTANT TO COMMON SOIL CHEMICALS, MILDEW, AND INSECTS; NON-BIODEGRADABLE; IN LONGEST LENGTHS POSSIBLE; FABRIC INCLUDING SEAMS WITH THE FOLLOWING MINIMUM AVERAGE ROLL LENGTHS:
1. AVERAGE OPENING SIZE: 20 U.S. STD. SIEVE, MAXIMUM, WHEN TESTED IN ACCORDANCE WITH ASTM D4751.
2. PERMITTIVITY: 0.05 SEC^-1, MINIMUM, WHEN TESTED IN ACCORDANCE WITH ASTM D4491.
3. ULTRAVIOLET RESISTANCE: RETAINING AT LEAST 70 PERCENT OF TENSILE STRENGTH, WHEN TESTED IN ACCORDANCE WITH ASTM D4355/D4355M AFTER 500 HOURS EXPOSURE.
4. TENSILE STRENGTH: 100 LB-F, MINIMUM, IN CROSS-MACHINE DIRECTION; 124 LB-F, MINIMUM, IN MACHINE DIRECTION; WHEN TESTED IN ACCORDANCE WITH ASTM D4632.
5. ELONGATION: 15 TO 30 PERCENT, WHEN TESTED IN ACCORDANCE WITH ASTM D4632.
6. TEAR STRENGTH: 55 LB-F, MINIMUM, WHEN TESTED IN ACCORDANCE WITH ASTM D4533.
7. COLOR: MANUFACTURER'S STANDARD, WITH EMBEDMENT AND FASTENER LINES PREPRINTED.
8. SILT FENCE POSTS: ONE OF THE FOLLOWING, MINIMUM 5 FEET LONG:
a. STEEL U- OR T-SECTION, WITH MINIMUM MASS OF 1.33 LB PER LINEAR FOOT.
b. SOFTWOOD, 4 BY 4 INCHES IN CROSS SECTION.
c. HARDWOOD, 2 BY 2 INCHES IN CROSS SECTION.

B. TEMPORARY SEDIMENT LOGS: FILTER LOGS SHALL CONSIST OF TYPE WOOD FIBER BIOROLLS AND THE REQUIREMENTS OF MNDOT SPEC. 3897.
1. SHALL BE ONE OF THE FOLLOWING.
a. SHALL BE SILTSOXX PERIMETER CONTROL BY FILTREXX, INC., OR EQUAL.

C. TEMPORARY SEDIMENT FILTER.
1. SHALL BE ONE OF THE FOLLOWING.
a. DROP-IN SEDIMENT FILTER UNIT THAT INSERTS INTO THE INLET.
1) SHALL BE FLEXSTORM PURE: PERMANENT INLET FILTER BY ADS, INC., OR EQUAL.
(a)PROVIDE CURB OPENING PROTECTION FOR EXISTING INLETS WITH CURB OPENINGS.

D. TEMPORARY ROCK CONSTRUCTION ENTRANCE.
1. ROCK SHALL BE CLEAN 1 TO 2 INCH WASHED ROCK.

E. TEMPORARY SLOPE EROSION PROTECTION.
1. SHALL BE ONE OF THE FOLLOWING.
a. EROSION CONTROL BLANKET.
1) SHALL CONSIST OF A UNIFORM WEB OF INTERLOCKING STRAW OR WOOD FIBERS SANDWICHED BETWEEN AN ATTACHED TOP AND BOTTOM LAYER OF NET BACKING.
2) THE NETTING SHALL BE BIODEGRADABLE CONTAINING SUFFICIENT UV STABILIZATION FOR BREAKDOWN TO OCCUR WITHIN A NORMAL GROWING SEASON.
3) STAPLES USED TO ANCHOR THE BLANKETS SHALL BE U-SHAPED, 11 GAUGE OR HEAVIER STEEL WIRE HAVING A SPAN WIDTH OF 1 INCH AND A LENGTH OF 8 INCHES OR MORE FROM TOP TO BOTTOM AFTER BENDING.
4) THE EROSION CONTROL BLANKETS ACCEPTABLE FOR USE ON THIS PROJECT INCLUDE:
(a)GEO-SYNTHETICS, INC., - LANDLOK 52.
(b)NORTH AMERICAN GREEN - S150.
(c)OR EQUAL.
b. BONDED FIBER MATRIX.
1) THE FIBERS SHALL BE COMPOSED OF 100% WOOD OR WOOD BY-PRODUCTS. A MINIMUM OF 25% OF THE FIBERS SHALL AVERAGE 10.16 MM (0.4 INCHES) IN LENGTH AND 50% OR MORE SHALL BE RETAINED ON A CLARK FIBER CLASSIFIER 24 MESH SCREEN. FIBERS SHALL BE COLORED WITH A WATER SOLUBLE, NON-TOXIC DYE, TO AID IN UNIFORM APPLICATION OVER THE SITE.
2) THE BINDER SHALL BE A HYDRO COLLOID BASED (GUAR GUM) WITH ADDED SLOW-RELEASE AND AGRICULTURAL BASED FERTILIZERS. THE BINDER SHALL NOT DISSOLVE OR DISPERSE UPON REWETTING.
3) THE BFM SLURRY SHALL DRY TO FORM A CRUST APPROXIMATELY 3-6 MM (1/8 TO 1/4 INCHES) THICK ADHERING TO THE SOIL SURFACE.
4) THE MOISTURE CONTENT OF THE MATRIX SHALL BE 12% +/- 3% BY WEIGHT.
5) THE MATRIX SHALL CONSIST OF MATERIALS THAT ARE 100% BIODEGRADABLE AND 100% BENEFICIAL TO PLANT LIFE.
6) THE MATRIX SHALL PROVIDE 100% CONTINUOUS COVERAGE AND SHALL HAVE NO HOLES GREATER THAN 1MM IN SIZE.
7) THE HYDRATED MIXTURE DENSITY SHALL BE APPROXIMATED BY A SLUMP TEST PRIOR TO APPLICATION.
8) THE BFM MULCH: WATER RATIO SHALL BE AS MANUFACTURER RECOMMENDATIONS. THE MINIMUM BFM MULCH TO WATER RATIO IS 50LBS BFM MULCH AND 100 GALLONS WATER. THE WATER RATE WILL VARY BETWEEN 100 GALLONS AND 125 GALLONS PER 50LBS, DEPENDING ON WHICH OF THE PRODUCTS IS USED.
9) THE BONDED FIBER MATRIX MULCH PRODUCTS ACCEPTABLE FOR USE ON THIS PROJECT INCLUDE.
(a)ECOAEGIS - MANUFACTURED BY CANFOR.
(b)SOIL GUARD - MANUFACTURED BY MAT, INC.
(c)CONWED 3000 - MANUFACTURED BY CONWED FIBERS, INC.

F. TEMPORARY PUMPED SEDIMENT CONTROL DEVICE.
1. NON-WOVEN GEOTEXTILE FABRIC SEWN INTO A BAG USING A DOUBLE NEEDLE MACHINE AND HIGH STRENGTH THREAD.
a. SEAMS SHALL HAVE AN AVERAGE WIDTH STRENGTH OF 60LB/INCH AS PER ASTM D4883 AND MEET OR EXCEED THE FOLLOWING.
1) GRAB TENSILE OF 205 LBS AS PER ASTM D 4632.
2) PUNCTURE OF 110 LBS AS PER ASTM D 4833.
3) FLOW RATE OF 95 GAL/MIN/SF AS PER ASTM D 4491.
4) PERMITTIVITY OF 1.5 SEC-1 AS PER ASTM D 4491.
5) MULLEN BURST STRENGTH OF 350 PSI AS PER ASTM D 3786.
6) AOS% OF 80% US SIEVE AS PER ASTM D 4751.
2. SPOUT LARGE ENOUGH TO ACCOMMODATE A 4 INCH DISCHARGE HOSE WITH STRAP TO TIE UNIT CLOSED.
3. SHALL BE ONE OF THE FOLLOWING.
a. DIRTBAG.
1) ACF ENVIRONMENTAL, INC., 2831 CARDWELL ROAD, RICHMOND, VIRGINIA 23234, 800-448-3636.
b. DANDY DEWATERING BAG.
1) DANDY PRODUCTS, INC., P.O. BOX 1980, WESTERVILLE, OHIO 43086, 800-591-2284.
c. OR EQUAL.

PART 3 EXECUTION

3.01 PREPARATION

A. SCHEDULE WORK SO THAT SOIL SURFACES ARE LEFT EXPOSED FOR THE MINIMUM AMOUNT OF TIME.

B. THE CONSTRUCTION SITE OPERATOR SHALL FOLLOW ALL REQUIREMENTS OF THE MINNESOTA STORMWATER PERMIT NO. MN R100001.

C. THE CONTRACTOR SHALL COMPLETE AND SIGN THE NOTICE OF INTENT, OBTAIN THE OWNER'S SIGNATURE, AND SUBMIT TO THE MPCA.
1. PROVIDE A SIGNED COPY TO THE OWNER.

3.03 INSTALLATION

A. TEMPORARY ROCK CONSTRUCTION ENTRANCE.
1. THE ROCK AREA SHALL BE A MINIMUM OF 6 INCHES DEEP, EXTEND THE FULL WIDTH OF THE EGRESS AREA AND SHALL BE AT LEAST 50FT LONG, HOWEVER, LONGER ENTRANCES MAY BE REQUIRED TO ADEQUATELY CLEAN THE TIRES.
2. GEOTEXTILE FABRIC MAY BE USED TO PREVENT MIGRATION OF MUD FROM THE UNDERLYING SOIL INTO THE ROCK.

B. TEMPORARY SILT FENCES:
1. STORE AND HANDLE FABRIC IN ACCORDANCE WITH ASTM D4873.
2. USE NOMINAL 30 INCH HIGH BARRIERS, MINIMUM 60 INCH LONG POSTS SPACED AT 6 FEET MAXIMUM SPACING.
3. EMBED BOTTOM OF FABRIC IN A TRENCH ON THE UPSLOPE SIDE OF FENCE, WITH 6 INCHES OF FABRIC LAID FLAT ON BOTTOM OF TRENCH FACING UPSLOPE; BACKFILL TRENCH AND COMPACT.
4. MINIMUM POST EMBEDMENT.
a. STEEL POST = 24 INCHES, MINIMUM.
b. WOOD POST = 18 INCHES, MINIMUM.
5. DO NOT SPLICE FABRIC WIDTH; MINIMIZE SPLICES IN FABRIC LENGTH; SPLICE AT POST ONLY, OVERLAPPING AT LEAST 18 INCHES, WITH EXTRA POST.
6. FASTEN FABRIC TO WOOD POSTS USING ONE OF THE FOLLOWING:
a. FOUR NAILS PER POST WITH 3/4 INCH DIAMETER FLAT OR BUTTON HEAD, 1 INCH LONG, AND 14 GAGE, 0.083 INCH SHANK DIAMETER.
b. FIVE STAPLES PER POST WITH AT LEAST 17 GAGE, 0.0453 INCH WIRE, 3/4 INCH CROWN WIDTH AND 1/2 INCH LONG LEGS.
7. FASTEN FABRIC TO STEEL POSTS USING WIRE, NYLON CORD, OR INTEGRAL POCKETS.

C. TEMPORARY SEDIMENT LOGS:
1. PERIMETER CONTROL SHOULD BE INSTALLED PARALLEL TO THE BASE OF THE SLOPE OR OTHER DISTURBED AREA.
2. STAKES SHOULD BE INSTALLED THROUGH THE MIDDLE OF THE PERIMETER CONTROL ON 10 FT CENTERS, USING 2 IN BY 2 IN BY
3 FT WOODEN STAKES. IN THE EVENT STAKING IS NOT POSSIBLE, I.E., WHEN PERIMETER CONTROL IS USED ON PAVEMENT, HEAVY CONCRETE BLOCKS SHALL BE USED BEHIND THE PERIMETER CONTROL TO HELP STABILIZE DURING RAIN EVENTS.

D. TEMPORARY SEDIMENT FILTERS.
1. DROP-IN SEDIMENT TRAP.
a. PLACE AS RECOMMENDED BY THE MANUFACTURER.

E. TEMPORARY PUMPED SEDIMENT CONTROL DEVICE.
1. INSTALL AS PER MANUFACTURER'S RECOMMENDATIONS.

F. TEMPORARY SLOPE EROSION PROTECTION.
1. PLACE AT ANY AND ALL FINISH SLOPES THAT ARE STEEPER THAN 10H:1V.
2. SEED AND FERTILIZE PER SPECIFICATION 32 9219 PRIOR TO INSTALLING TEMPORARY SLOPE EROSION PROTECTION.
3. BONDED FIBER MATRIX.
a. INSTALL THE BFM AS PER THE MANUFACTURER'S INSTRUCTIONS WITH THE FOLLOWING MINIMUM GUIDELINES.
1) THE BFM SHALL BE APPLIED WITH HYDRAULIC SPRAY EQUIPMENT BY A MANUFACTURER'S CERTIFIED APPLICATOR.
2) APPLICATION SHALL BE DONE AT LEAST 24 HOURS IN ADVANCE OF PROJECTED RAINFALL TO ALLOW THE BFM MULCH ADEQUATE TIME TO DRY.
3) THE BFM MULCH SHALL BE APPLIED IN TWO STAGES (ONE-HALF RATE) WITH AMPLE TIME TO DEWATER THE FIRST APPLICATION.
4) THE BFM MULCH SHALL BE APPLIED FROM AT LEAST TWO ALTERNATE DIRECTIONS, PREFERABLY 90 DEGREES APART, IF POSSIBLE, TO ENSURE ALL SOIL FACES ARE COVERED.
5) THE INSTALLATION RATE OF THE BFM MULCH SHALL BE 3500 LBS PER ACRE, MINIMUM AND 100% COVERAGE.
4. EROSION CONTROL BLANKET.
a. INSTALL AS PER MANUFACTURER'S RECOMMENDATIONS.

3.04 MAINTENANCE

A. INSPECT PREVENTIVE MEASURES WEEKLY, WITHIN 24 HOURS AFTER THE END OF ANY STORM THAT PRODUCES 0.5 INCHES OR MORE RAINFALL AT THE PROJECT SITE, AND DAILY DURING PROLONGED RAINFALL.

B. REPAIR DEFICIENCIES IMMEDIATELY.

C. TEMPORARY SILT FENCES:
1. PROMPTLY REPLACE FABRIC THAT DETERIORATES UNLESS NEED FOR FENCE HAS PASSED.
2. REMOVE SILT DEPOSITS THAT EXCEED ONE-THIRD OF THE HEIGHT OF THE FENCE.
3. REPAIR FENCES THAT ARE UNDERCUT BY RUNOFF OR OTHERWISE DAMAGED, WHETHER BY RUNOFF OR OTHER CAUSES.

D. TEMPORARY CONSTRUCTION EXIT.
1. PERIODIC ADDITION OF ROCK, OR REMOVAL AND REPLACEMENT OF PAD SHALL BE PROVIDED AS VOIDS BECOME FILLED WITH SOIL.

E. TEMPORARY PUMPED SEDIMENT CONTROL DEVICE.
1. REPLACE THE UNIT WHEN 1/2 FULL OF SEDIMENT OR WHEN SEDIMENT HAS REDUCED THE FLOW RATE OF THE PUMP DISCHARGE TO AN IMPRACTICAL RATE.

F. PLACE SEDIMENT IN APPROPRIATE LOCATIONS ON SITE; DO NOT REMOVE FROM SITE.

3.05 CLEAN UP

A. REMOVE TEMPORARY MEASURE AFTER PERMANENT VEGETATION HAS BEEN ESTABLISHED.

B. WHERE REMOVAL OF TEMPORARY MEASURES WOULD LEAVE EXPOSED SOIL, SHAPE SURFACE TO AN ACCEPTABLE GRADE AND FINISH TO MATCH ADJACENT GROUND SURFACES.

END OF SECTION

IMPAIRED WATERS MAP

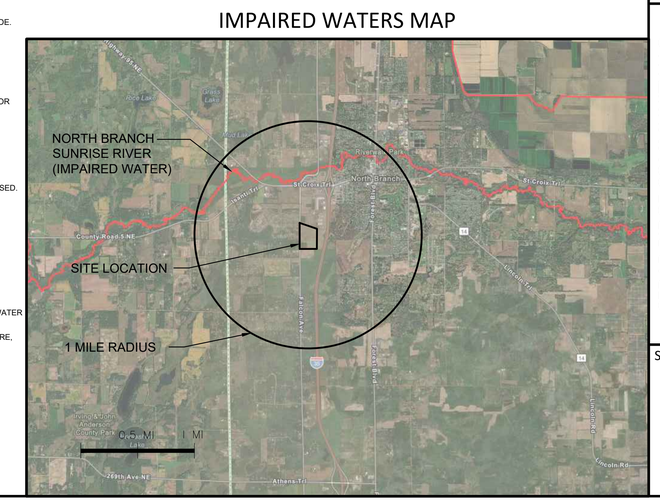

REV NO.	DATE	DESCRIPTION
1	04/01/2025	REVISION PER CITY REVIEW
2	04/24/2025	REVISION PER CITY REVIEW

DATE: 04/24/2025
DESIGN BY: MJM
DRAWN BY: MJM
CHECKED BY: CJD
DWG FILE: SWPPP
FILE NO.: 22-0030.00

I hereby certify that this plan, specification, or report was prepared by me or under my direct supervision and that I am a duly Licensed Professional Engineer under the laws of the State of Minnesota.

NOT FOR CONSTRUCTION

Signed: Christopher J. Dahn
Date: Lic. No. 58628

BOGART, PEDERSON & ASSOCIATES, INC.
LAND SURVEYING
CIVIL ENGINEERING
ENVIRONMENTAL SERVICES
13076 FIRST STREET, BECKER, MN 55308-9322
TEL: 763-262-8822 FAX: 763-262-8844

CEDAR RIDGE COMMUNITY LLC
CEDAR RIDGE COMMUNITY
City of North Branch, Chisago County, MN

SWPPP NARRATIVE

SHEET NO.
C8.3

N:\Projects Current\22-0030.02 Bedker North Branch\Plat\Civil\CAD Files\NB Cover\SWPPP.dwg
4/24/2025 3:14 PM

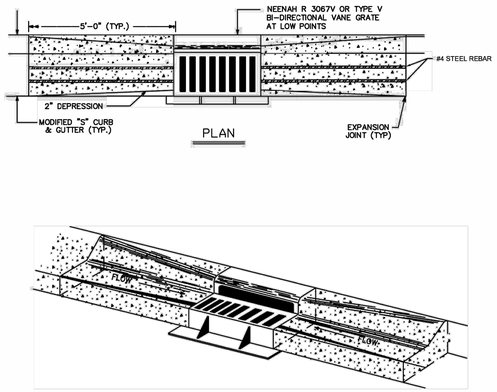

NOTE: MODIFIED "S" CURB & GUTTER TO BE FORMED INTO B618 TYPE CURB AT CATCH BASIN CASTING

NORTH BRANCH	CITY OF NORTH BRANCH SURMOUNTABLE CURB AND GUTTER AT CATCH BASIN NO SCALE	2025 - STANDARD DETAIL DETAIL NO. RDW - 004

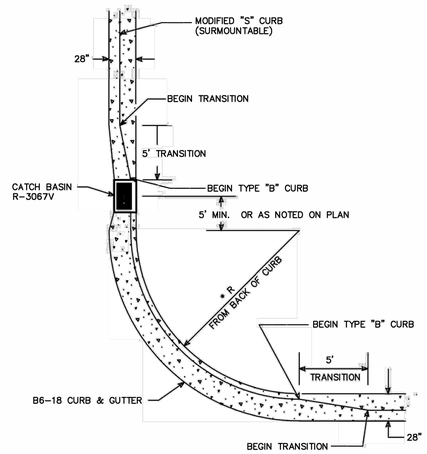

NOTES:
1. SEE STANDARD DETAIL PLATE FOR CONCRETE CURB AND GUTTER DETAILS

NORTH BRANCH	CITY OF NORTH BRANCH STREET RADIUS FOR CONCRETE CURB AND GUTTER NO SCALE	2025 - STANDARD DETAIL DETAIL NO. RDW - 005

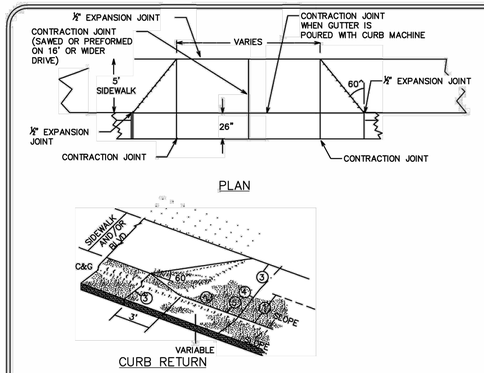

① WITHOUT SIDEWALK PAVEMENT ONLY TO END OF CURB RETURN WHEN ENTRANCE IS UNSURFACED OR CONSTRUCTION IS NOT NEEDED BEYOND THIS POINT.
② WITH SIDEWALK PAVEMENT TO BACK EDGE OF SIDEWALK PAID FOR AS CONCRETE DRIVEWAY PAVEMENT
③ 1/2" EXPANSION JOINT
④ CONTRACTION JOINT (FORMED OR SAWED)
⑤ DRIVEWAY NEED NOT BE POURED MONOLITHICALLY WITH CURB & GUTTER

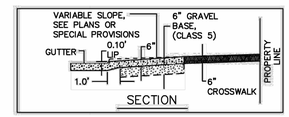

NOTE:
1 PAYMENT SHALL BE FROM BACK OF CURB
2 WHERE SIDEWALKS EXIST OR ARE PROPOSED THE DRIVEWAY APRON SHALL EXTEND TO THE BACK OF SIDEWALK
3 #4 STEEL AT 2' OC TO BE USED WHEN DRIVEWAY SLAB IS NOT POURED INTEGRAL WITH GUTTER

NORTH BRANCH	CITY OF NORTH BRANCH TYPICAL RESIDENTIAL CONCRETE DRIVEWAY APRON NO SCALE	2025 - STANDARD DETAIL DETAIL NO. RDW - 006

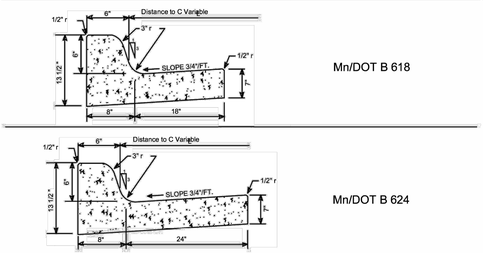

NOTE: A MINIMUM OF 3" OF CLASS 5 AGGREGATE BASE SHALL BE USED UNDER ALL CURB AND GUTTER.

NORTH BRANCH	CITY OF NORTH BRANCH CONCRETE CURB AND GUTTER NO SCALE	2025 - STANDARD DETAIL DETAIL NO. RDW - 003

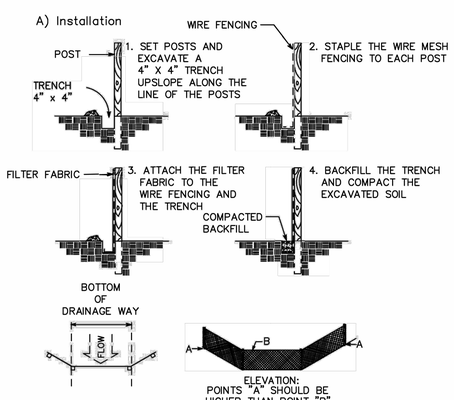

B) Maintenance
1. FILTER BARRIERS SHALL BE INSPECTED IMMEDIATELY AFTER EACH RAINFALL AND AT LEAST DAILY DURING PROLONGED RAINFALL. ANY REQUIRED REPAIRS SHALL BE MADE IMMEDIATELY.
2. SHOULD THE FABRIC DECOMPOSE OR BECOME INEFFECTIVE PRIOR TO THE END OF THE EXPECTED USEABLE LIFE AND THE BARRIER STILL BE NECESSARY, THE FABRIC SHALL BE REPLACED PROMPTLY.
3. SEDIMENT DEPOSITS SHOULD BE REMOVED AFTER EACH STORM EVENT. THEY MUST BE REMOVED WHEN DEPOSITS REACH APPROXIMATELY 1/3 THE HEIGHT OF THE BARRIER.
4. ANY SEDIMENT DEPOSITS REMAINING IN PLACE AFTER THE SILT FENCE OR FILTER BARRIER IS NO LONGER REQUIRED SHALL BE DRESSED TO CONFORM WITH THE EXISTING GRADE, PREPARED AND SEEDED, OR REMOVED

NORTH BRANCH	CITY OF NORTH BRANCH PLACEMENT AND CONSTRUCTION OF SILT FENCE NO SCALE	2025 - STANDARD DETAIL DETAIL NO. ERO-001

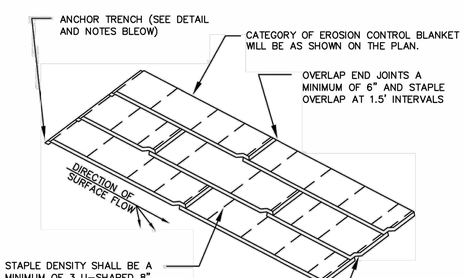

ANCHOR TRENCH
1. DIG 6" X 6" TRENCH
2. LAY BLANKET IN TRENCH
3. STAPLE AT 1.5' INTERVALS OR AS DIRECTED ON THE PLANS
4. BACKFILL WITH NATURAL SOIL AND COMPACT
5. ANCHOR TRENCHES SHALL BE PLACED AT THE TOP OF SLOPE, AND EVERY 100 LINEAR FEET OF SLOPE

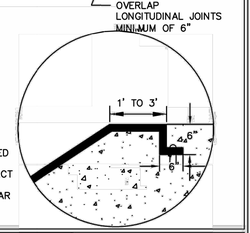

NORTH BRANCH	CITY OF NORTH BRANCH EROSION CONTROL BLANKET NO SCALE	2025 - STANDARD DETAIL DETAIL NO. ERO-006

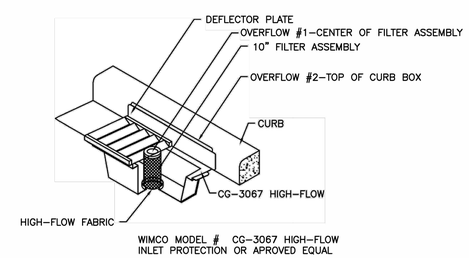

CURB AND GUTTER INLET PROTECTION
NO SCALE

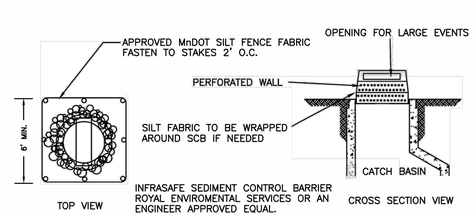

REAR YARD INLET PROTECTION
NO SCALE

NORTH BRANCH	CITY OF NORTH BRANCH STORM SEWER INLET PROTECTION NO SCALE	2025 - STANDARD DETAIL DETAIL NO. ERO-003

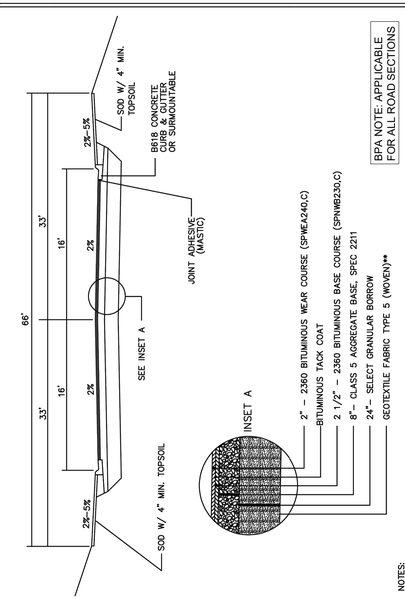

NOTES:
1. DESIGN MAY CHANGE UPON REVIEW OF THE SOIL CONDITIONS.
2. NO STREET CUTS ARE ALLOWS AFTER NOVEMBER 1. STREET CUT PERMIT IS VALID FOR 30 DAYS.
3. PAVEMENT SHALL BE LAID TO MINIMIZE SEAMS. PAVER SCREED SHALL BE 16' WIDE.

**WHERE UNSUITABLE MATERIALS EXIST, AS DIRECTED BY THE ENGINEER

NORTH BRANCH	CITY OF NORTH BRANCH TYPICAL RESIDENTIAL URBAN STREET NO SCALE	2025 STANDARD DETAIL DETAIL NO. RDW - 001

REV NO.	DATE	DESCRIPTION
1	04/01/2025	REVISION PER CITY REVIEW
2	04/24/2025	REVISION PER CITY REVIEW

DATE: 04/24/2025
DESIGN BY: M.J.M
DRAWN BY: M.J.M
CHECKED BY: C.J.D
DWG FILE: DETAILS
FILE NO.: 22-0030.00

I hereby certify that this plan, specification, or report was prepared by me or under my direct supervision and that I am a duly Licensed Professional Engineer under the laws of the State of Minnesota.

Signed: Christopher J. Dahn
Date: Lic. No. 58628

NOT FOR CONSTRUCTION

BOGART, PEDERSON & ASSOCIATES, INC.
LAND SURVEYING
CIVIL ENGINEERING
ENVIRONMENTAL SERVICES
13076 FIRST STREET, BECKER, MN 55308-9322
TEL: 763-262-9622 FAX: 763-262-9644

CEDAR RIDGE COMMUNITY LLC
CEDAR RIDGE COMMUNITY
City of North Branch, Chisago County, MN

DETAILS

SHEET NO.
C9.1

N:\Projects Current\22-0030.02 Bellator North Branch Plat\Civil\CAD Files\NB Cover\SWPPP.dwg
4/24/2025 3:14 PM

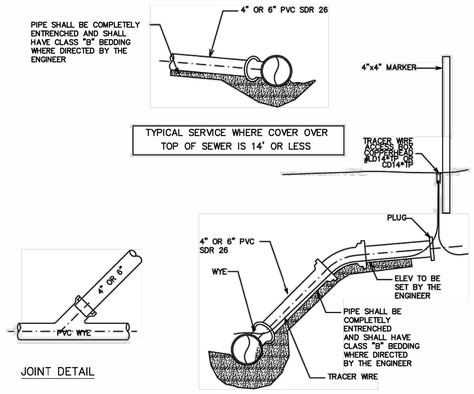

NOTES:

1) ALL SERVICE CONNECTIONS INCLUDING NECESSARY BENDS AND SPECIAL FITTINGS SHALL BE PAID FOR AT THE CONTRACT UNIT PRICE BID PER LINEAR FOOT OF 4" OR 6". NO ADDITIONAL COMPENSATION SHALL BE ALLOWED FOR CONCRETE ENCASEMENT OR PIPE BEDDING.
2) ALL SERVICE CONNECTIONS SHALL TERMINATE 10' INSIDE PROPERTY LINE. UNLESS OTHERWISE APPROVED BY THE ENGINEER.
3) SERVICE STUB SHALL BE PLUGGED AND MARKED WITH A 4" x 4" TIMBER PROTRUDING 3' OUT OF GROUND. (PAINTED GREEN)
4) NO SADDLES WILL BE ALLOWED
5) RETRO-FIT INSTALLATIONS TO BE CONSTRUCTED BY CUTTING IN A PVC WYE AND PVC SLEEVE
6) SEWER SERVICES ARE TO BE LOCATED 3' DOWNSTREAM OF WATER SERVICE IF IN THE SAME TRENCH

NORTH BRANCH	CITY OF NORTH BRANCH SANITARY SEWER SERVICE DETAIL NO SCALE	2025 - STANDARD DETAIL DETAIL NO. SAN-001

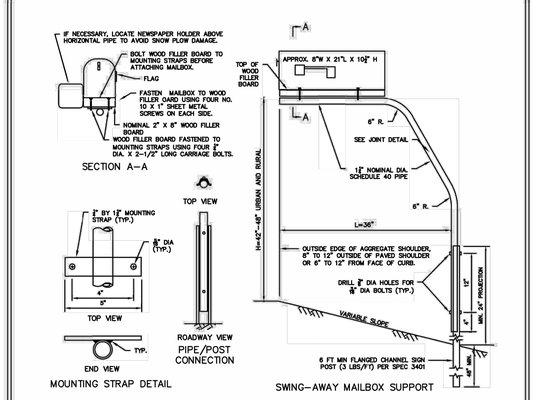

NOTES:

MAILBOX LOCATIONS SHOW BE STAKED BEFORE INSTALLATION FOR PROPER HEIGHT AND DISTANCE FROM ROADWAY. ONCE STAKED, THE INSTALLER MUST NOTIFY THE ENGINEER AND THE POST OFFICE. THE ENGINEER AND THE POSTMASTER SHALL APPROVE THE STAKED LOCATIONS PRIOR TO FINAL INSTALLATION.

THE MINIMUM SPACING (CENTER TO CENTER) BETWEEN MULTIPLE SUPPORTS SHALL BE EQUAL TO THE HEIGHT OF THE MAILBOX SUPPORT.

NORTH BRANCH	CITY OF NORTH BRANCH MAIL BOX INSTALLATION DETAIL NO SCALE	2025 - STANDARD DETAIL DETAIL NO. RDW - 013

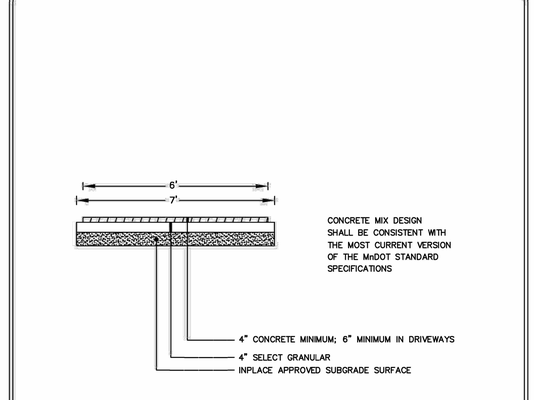

NORTH BRANCH	CITY OF NORTH BRANCH TYPICAL CONCRETE WALK NO SCALE	2025 - STANDARD DETAIL DETAIL NO. RDW - 012

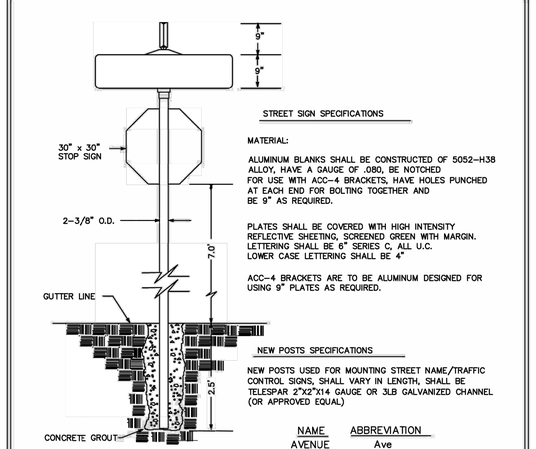

NAME	ABBREVIATION
AVENUE	Ave
BOULEVARD	Blvd
CIRCLE	Cir
COURT	Ct
DRIVE	Dr
EAST	E
PARKWAY	Pkwy
PLACE	Pl
STREET	St
TERRACE	Ter
TRAIL	Trl
WEST	W

NORTH BRANCH	CITY OF NORTH BRANCH TYPICAL STREET SIGN NO SCALE	2025 - STANDARD DETAIL DETAIL NO. RDW - 010

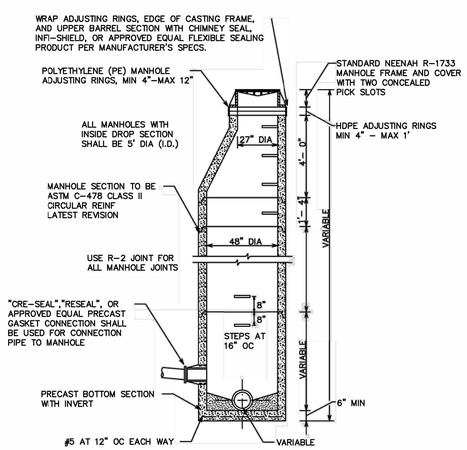

NOTES:

1. MANHOLE STEPS SHALL BE CAST IRON OR MA MODEL PS-1-PF (BY MA INDUSTRIAL INC.) CONFORMING TO ALL OSHA REGULATIONS AND SPACED 16" OC.
2. ALL MANHOLE JOINTS SHALL BE SEAL WRAPPED AS DESCRIBED IN THE SPECIFICATION (INCIDENTAL).

NORTH BRANCH	CITY OF NORTH BRANCH STANDARD MANHOLE FOR SANITARY SEWER NO SCALE	2025 - STANDARD DETAIL DETAIL NO. SAN-002

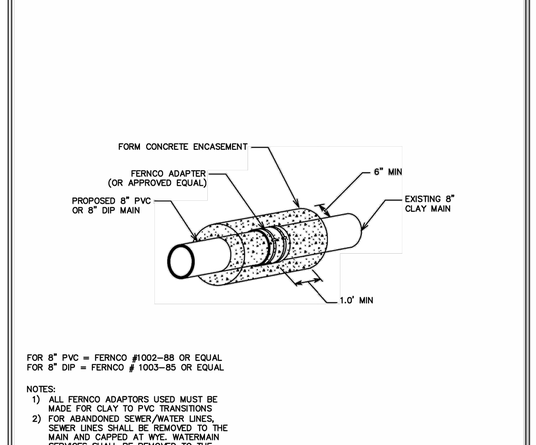

FOR 8" PVC = FERNCO #1002-88 OR EQUAL
FOR 8" DIP = FERNCO # 1003-85 OR EQUAL

NOTES:

1) ALL FERNCO ADAPTORS USED MUST BE MADE FOR CLAY TO PVC TRANSITIONS
2) FOR ABANDONED SEWER/WATER LINES, SEWER LINES SHALL BE REMOVED TO THE MAIN AND CAPPED AT WYE. WATERMAIN SERVICES SHALL BE REMOVED TO THE MAIN WITH THE CORPORATION STOP REMOVED AND CAPPED WITH A BRASS PLUG.

NORTH BRANCH	CITY OF NORTH BRANCH SANITARY SEWER MAIN TO CLAY PIPE CONNECTION DETAIL NO SCALE	2025 - STANDARD DETAIL DETAIL NO. SAN - 003

NOTE:
1. FRAME AND SOLID COVER TO BE NEENAH NO. R-1733 WITH NO.MF 25572 CONCEALED PICKHOLE OR APPROVED EQUAL.
2. USE NEENAH R-1755G FOR WATERTIGHT APPLICATIONS.

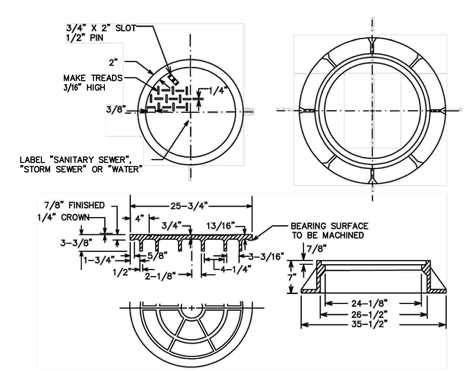

NORTH BRANCH	CITY OF NORTH BRANCH STANDARD SANITARY & STORM SEWER FRAME & COVER FOR MANHOLE NO SCALE	2025 - STANDARD DETAIL DETAIL NO. SAN-004

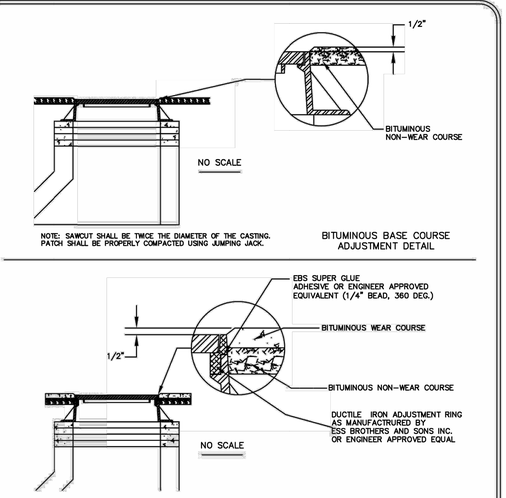

NORTH BRANCH	CITY OF NORTH BRANCH CASTING ADJUSTMENT FOR SANITARY AND STORM SEWER NO SCALE	2025 - STANDARD DETAIL DETAIL NO. SAN-005

REV NO.	DATE	DESCRIPTION
1	04/01/2025	REVISION PER CITY REVIEW
2	04/24/2025	REVISION PER CITY REVIEW

DATE: 04/24/2025
DESIGN BY: M.J.M
DRAWN BY: M.J.M
CHECKED BY: C.J.D
DWG FILE: DETAILS
FILE NO.: 22-0030.00

I hereby certify that this plan, specification, or report was prepared by me or under my direct supervision and that I am a duly Licensed Professional Engineer under the laws of the State of Minnesota.

NOT FOR CONSTRUCTION

Signed: Christopher J. Dahn
Date: Lic. No. 58628

BOGART, PEDERSON & ASSOCIATES, INC.
LAND SURVEYING
CIVIL ENGINEERING
ENVIRONMENTAL SERVICES
13079 FIRST STREET, BECKER, MN 55308-9322
TEL: 763-262-9822 FAX: 763-262-9844

CEDAR RIDGE COMMUNITY LLC
CEDAR RIDGE COMMUNITY
City of North Branch, Chisago County, MN

DETAILS

SHEET NO.
C9.2

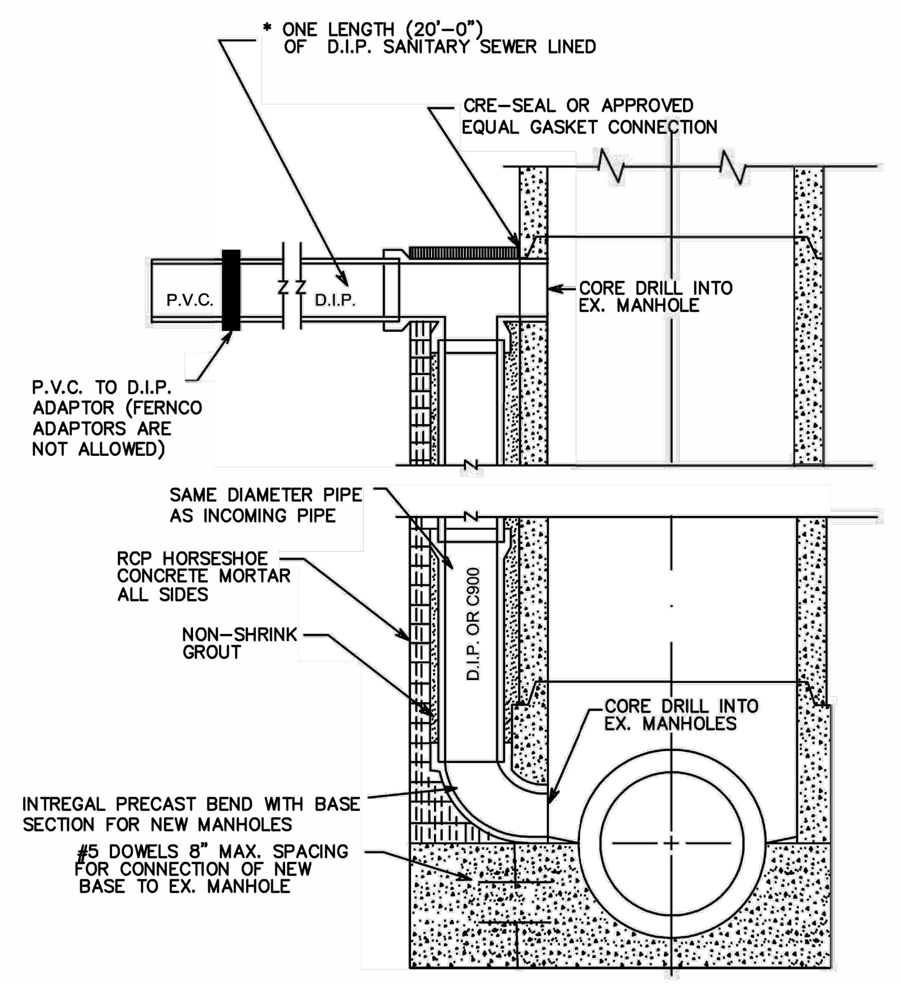

CITY OF NORTH BRANCH — EST. 1881 — NORTH BRANCH

CITY OF NORTH BRANCH
OUTSIDE DROP SECTION FOR SANITARY SEWER
NO SCALE

2025 - STANDARD DETAIL
DETAIL NO.
SAN-007

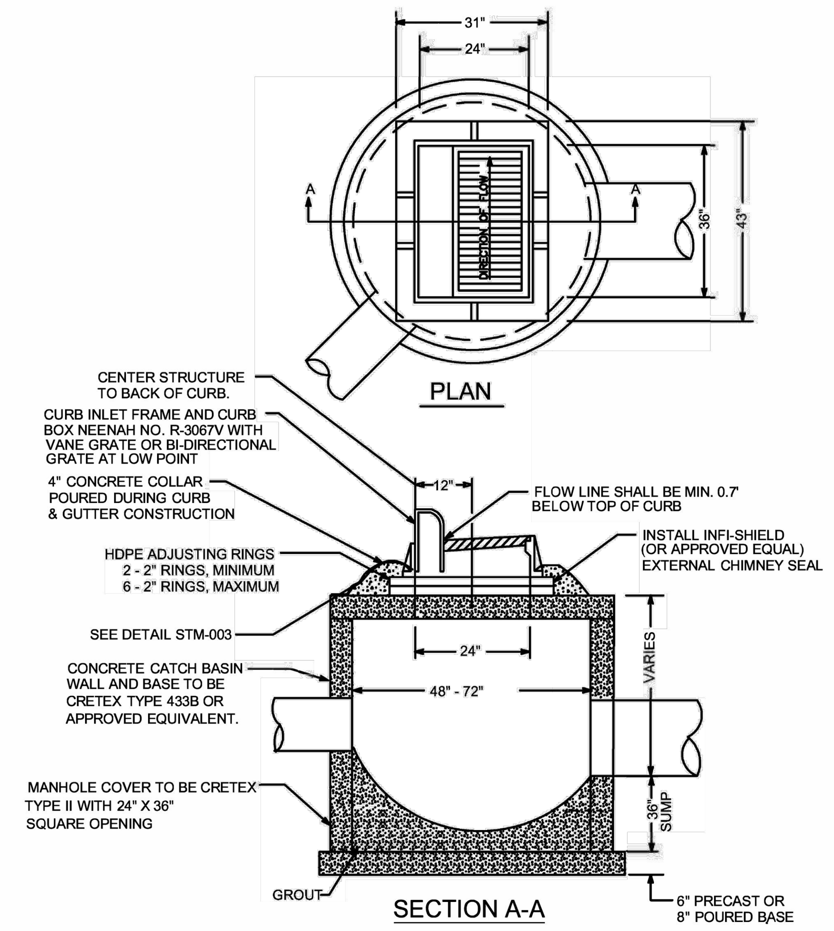

NOTES:
1. REINFORCING TO CONSIST OF #4 BARS @ 8" O.C. BOTH WAYS
2. MANHOLE STEPS SHALL BE CAST ALUMINUM OR MA INDUSTRY WITH VINYL COATING OR APPROVED EQUIVALENT AND SHALL BE LOCATED @ 16" O.C. PARALLEL WITH THE CURB
3. GROUT BOTTOM TO DRAIN TO CENTER
4. PIPE CUT-OUTS TO BE LOCATED WHERE REQUIRED
5. ADJUSTING RINGS SHALL BE HDPE INSTALLED ACCORDING TO MANUFACTURERS' REQUIREMENTS.
6. WIMCO OR APPROVED EQUAL INLET PROTECTION SHALL BE MAINTAINED AND KEPT IN GOOD SHAPE UNTIL WEAR COURSE IS PAVED
7. SURMOUNTABLE CURB DRIVE OVER CASTING - NEENAH 3501-TB
8. B-618 CURB DRIVE OVER CASTING - NEENAH 3290A

CITY OF NORTH BRANCH — EST. 1881 — NORTH BRANCH

CITY OF NORTH BRANCH
STANDARD STORM SEWER CATCH BASIN MANHOLE
NO SCALE

2025 - STANDARD DETAIL
DETAIL NO.
STM-002

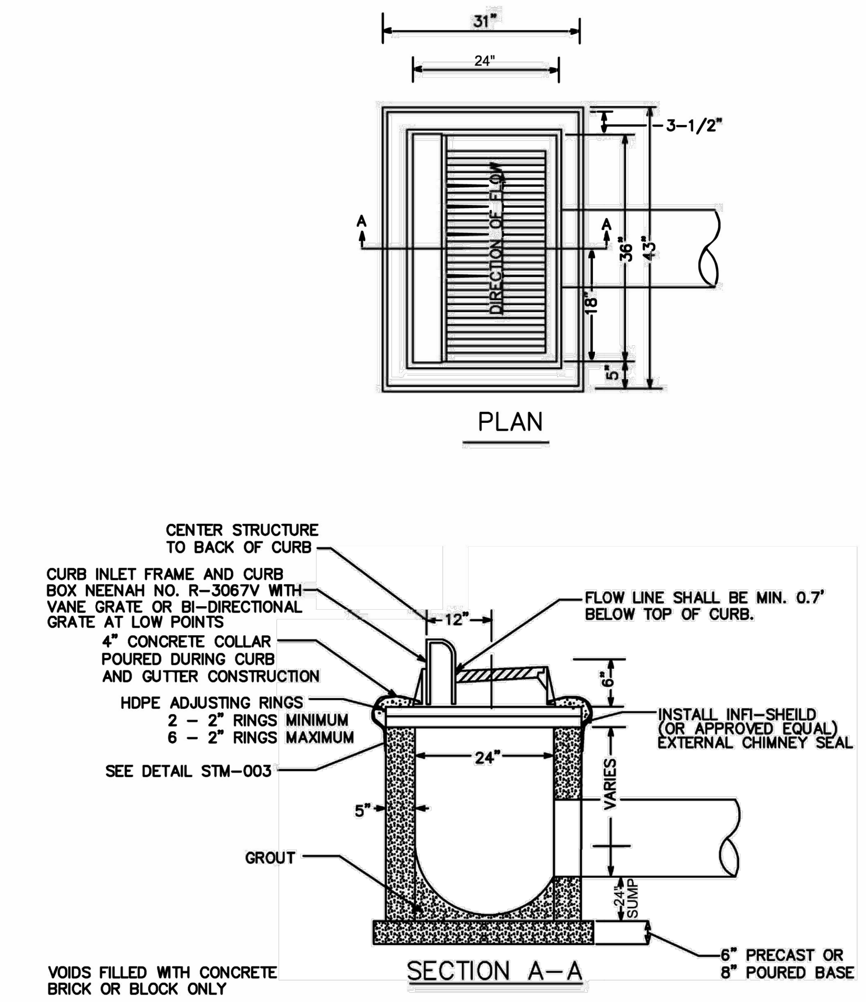

NOTES:
1. REINFORCING TO CONSIST OF #4 BARS @ 8" O.C. BOTH WAYS
2. GROUT BOTTOM TO DRAIN TO CENTER
3. PIPE CUT–OUTS TO BE LOCATED WHERE REQUIRED
4. ADJUSTING RINGS SHALL BE HDPE AND INSTALLED ACCORDING TO MANUFACTURERS' REQUIREMENTS.
5. WIMCO OR APPROVED EQUAL INLET PROTECTION SHALL BE MAINTAINED AND KEPT IN GOOD SHAPE UNTIL WEAR COURSE IS PAVED
6. SURMOUNTABLE CURB DRIVE OVER CASTING – NEENAH 3501–TB
7. B–618 CURB DRIVE OVER CASTING – NEENAH 3290A

CITY OF NORTH BRANCH — EST. 1881 — NORTH BRANCH

CITY OF NORTH BRANCH
STANDARD STORM SEWER MANHOLE, MNDOT 4020 MANHOLE
NO SCALE

2025 - STANDARD DETAIL
DETAIL NO.
STM-001

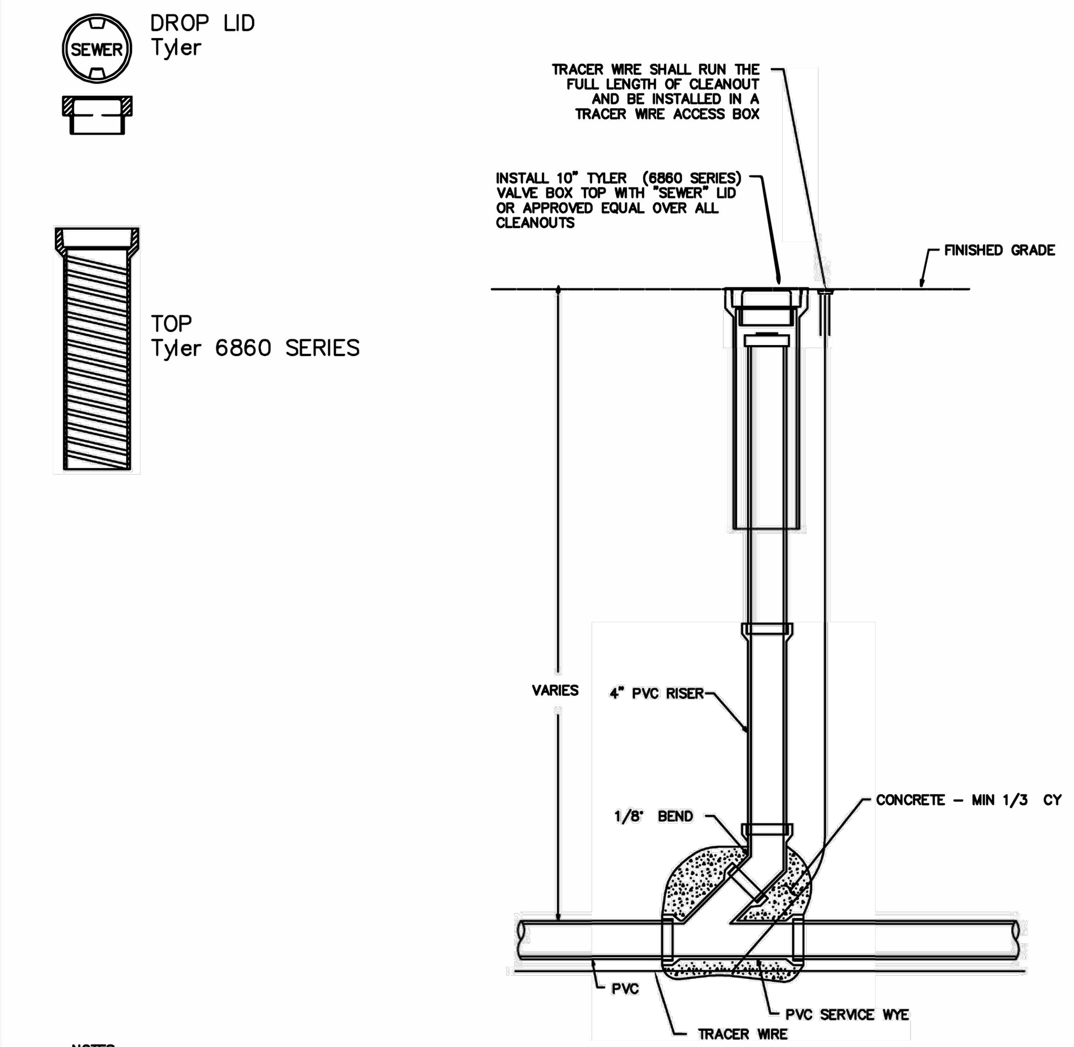

NOTES:
1. TRACER WIRE ACCESS BOX FOR NON–ROADWAY APPLICATIONS SHALL BE GRADE LEVEL COPPERHEAD LITE DUTY #LD14*TP.
2. TRACER WIRE ACCESS BOX FOR CONCRETE/DRIVEWAY APPLICATIONS SHALL BE COPPERHEAD #CD14*TP.
3. CLEANOUTS LOCATED IN DRIVEWAYS SHALL BE COVERED WITH A FORD A–1 METER BOX COVER.

CITY OF NORTH BRANCH — EST. 1881 — NORTH BRANCH

CITY OF NORTH BRANCH
SANITARY SEWER SERVICE CLEANOUT
NO SCALE

2025 - STANDARD DETAIL
DETAIL NO.
SAN - 008

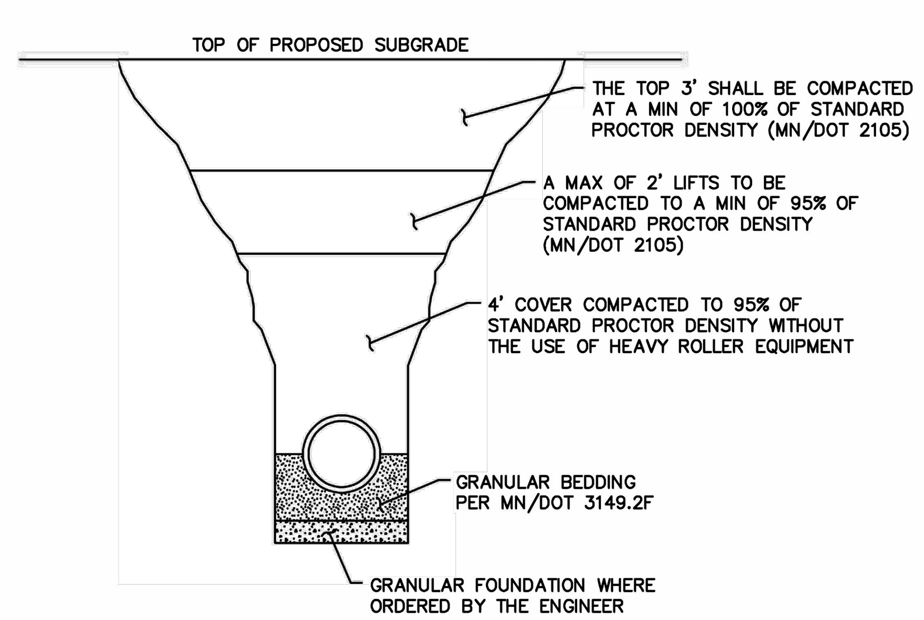

SHOVEL, PLACE, AND HAND COMPACT AROUND PIPE TO 12" ABOVE PIPE. VIBRATORY COMPACTION REQUIRED EACH SIDE OF PIPE, AS DIRECTED BY THE ENGINEER.

CITY OF NORTH BRANCH — EST. 1881 — NORTH BRANCH

CITY OF NORTH BRANCH
TYPICAL TRENCH COMPACTING AND CLASS B BEDDING
NO SCALE

2025 - STANDARD DETAIL
DETAIL NO.
SAN-006

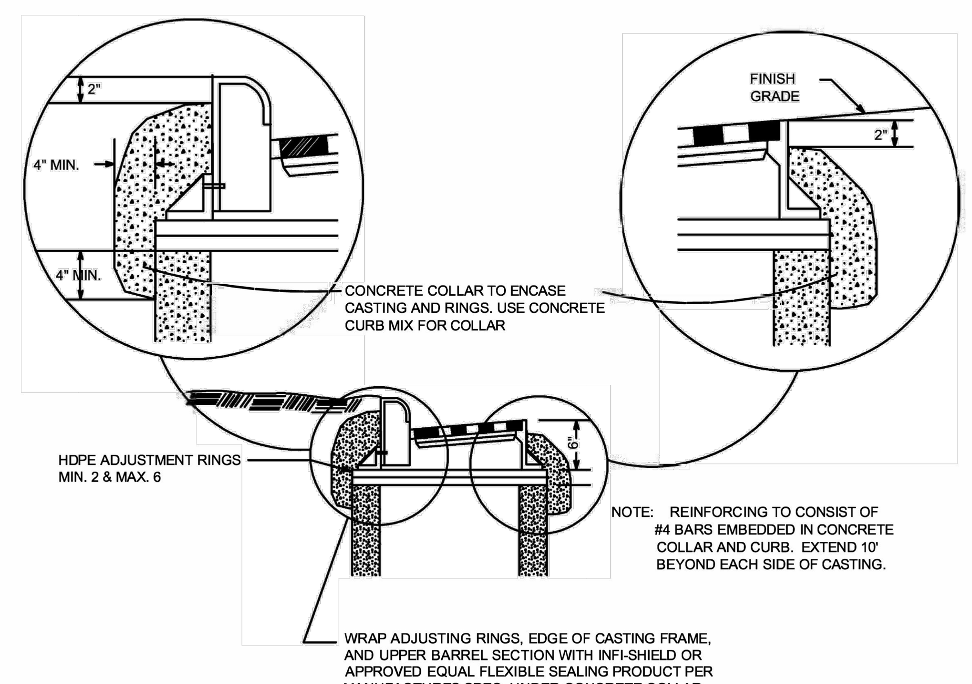

NOTE: REINFORCING TO CONSIST OF #4 BARS EMBEDDED IN CONCRETE COLLAR AND CURB. EXTEND 10' BEYOND EACH SIDE OF CASTING.

CITY OF NORTH BRANCH — EST. 1881 — NORTH BRANCH

CITY OF NORTH BRANCH
CONCRETE COLLAR FOR CATCH BASIN CASTING
NO SCALE

2025 - STANDARD DETAIL
DETAIL NO.
STM-003

See City Detail No. STM–007 for riprap placement.

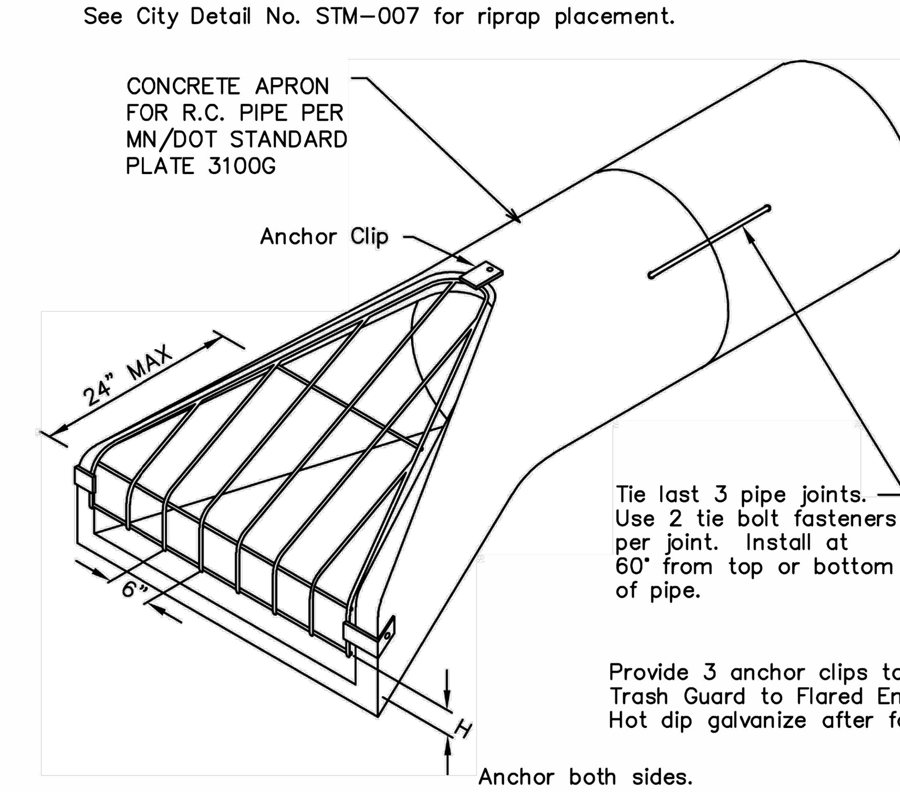

TRASH GUARD SIZING

Pipe Size	Bars	'H'	Bolts
12"–18"	3/4"0	4"	5/8"
21"–42"	1"0	6"	3/4"
48"–72"	1 1/4"0	12"	1"

NOTES:
1. Entire Trash Guard assembly to be HOT–DIP galvanized after fabrication.
2. Size of Trash Guard variable dependent on size of Flared End Section.
3. Trash Guards required on all Aprons 21" and larger unless otherwise noted.
4. Galvanized metal apron per MN/DOT standard plate 3129A to be used with HDPE pipe in green areas.
5. Install 7 foot 3lb galvanized post with 360 degree reflector (X4–13) at all flared end sections.

CITY OF NORTH BRANCH — EST. 1881 — NORTH BRANCH

CITY OF NORTH BRANCH
FLARED END SECTIONS AND TRASH GUARD DETAIL
NO SCALE

2025 - STANDARD DETAIL
DETAIL NO.
STM-005

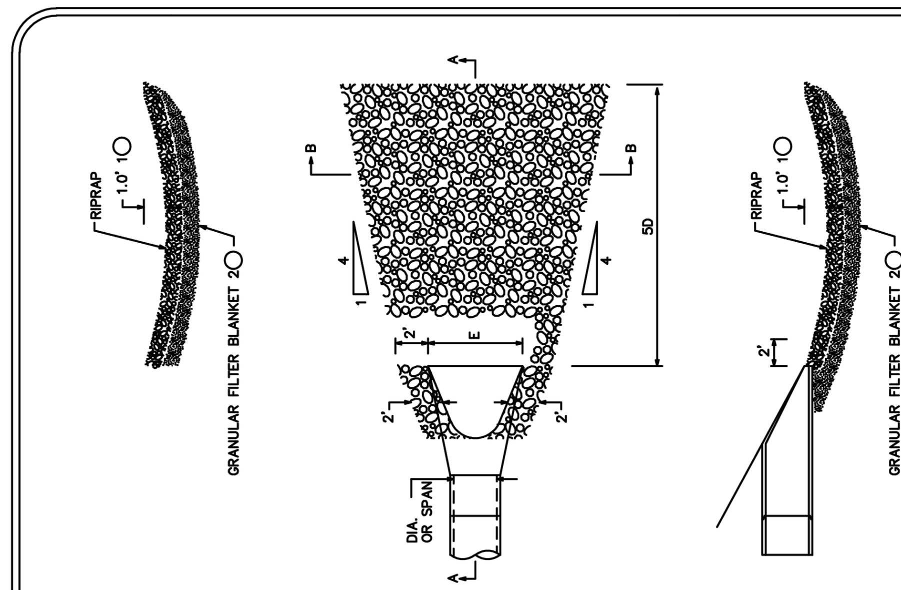

1 FOR PIPES GREATER THAN OR EQUAL TO 48", USE 2.0'
2 THE CONTRACTOR, AT HIS OPTION, MAY SUBSTITUTE A GEOTEXTILE FABRIC, SPEC 3601 FOR THE GRANULAR FILTER BLANKET UNLESS OTHERWISE SPECIFIED IN THE PLANS. THE FABRIC SHOULD COVER THE AREA OF THE RIPRAP AND EXTEND UNDER THE CULVERT APRON 3 FEET.

DIA ROUND PIPE (IN)	CLASS III D_{50} = 9": 15" DEPTH RIPRAP (CU YD)	CLASS III D_{50} = 9": 7.5" DEPTH GRANULAR FILTER (CU YD)	CLASS IV D_{50} = 12": 18" DEPTH RIPRAP (CU YD)	CLASS IV D_{50} = 12": 9" DEPTH GRANULAR FILTER (CU YD)	CLASS V D_{50} = 15": 24" DEPTH RIPRAP (CU YD)	CLASS V D_{50} = 15": 12" DEPTH GRANULAR FILTER (CU YD)
12	2.1	1.1	2.6	1.3	3.4	1.7
15	2.9	1.4	3.5	1.7	4.6	2.3
18	3.6	1.8	4.4	2.2	5.8	2.9
21	4.6	2.3	5.6	2.8	7.4	3.7
24	5.8	2.9	6.9	3.5	9.2	4.6
27	6.9	3.4	8.3	4.1	11.0	5.5
30	8.3	4.1	9.9	5.0	13.2	6.6
36	11.0	5.5	13.2	6.6	17.6	8.8
42	13.6	6.8	16.4	8.2	21.8	10.9
48	16.8	8.4	20.1	10.1	26.8	13.4
54	19.8	9.9	23.7	11.9	31.6	15.8
60	23.0	11.5	27.6	13.8	36.8	18.4
66	27.0	13.5	32.4	16.2	43.2	21.6
72	31.1	15.6	37.4	18.7	49.8	24.9
84	40.0	20.0	48.0	24.0	64.0	32.0
90	45.5	22.8	54.6	27.3	72.8	36.4

SPAN ROUND PIPE (IN)	CLASS III D_{50} = 9": 15" DEPTH RIPRAP (CU YD)	CLASS III D_{50} = 9": 7.5" DEPTH GRANULAR FILTER (CU YD)	CLASS IV D_{50} = 12": 18" DEPTH RIPRAP (CU YD)	CLASS IV D_{50} = 12": 9" DEPTH GRANULAR FILTER (CU YD)	CLASS V D_{50} = 15": 24" DEPTH RIPRAP (CU YD)	CLASS V D_{50} = 15": 12" DEPTH GRANULAR FILTER (CU YD)
22	3.6	1.8	4.4	2.2	5.8	2.9
28	5.8	2.9	6.9	3.5	9.2	4.6
36	8.1	4.1	9.8	4.9	13.0	6.5
43	11.0	5.5	13.2	6.6	17.6	8.8
51	13.6	6.8	16.4	8.2	21.8	10.9
58	16.5	8.3	19.8	9.9	26.4	13.2
65	19.8	9.9	23.7	11.9	31.6	15.8
73	23.3	11.6	27.9	14.0	37.2	18.6
88	32.4	16.2	38.9	19.4	51.8	25.9
102	43.5	21.8	52.2	26.1	69.6	34.8
115	44.0	22.0	52.8	26.4	70.4	35.2
122	49.3	24.6	59.1	29.6	78.8	39.4
138	61.3	30.6	73.5	36.8	98.0	49.0
154	74.4	37.2	89.3	44.6	119.0	59.5

NOTE: REQUIREMENTS FOR RIPRAP SIZE, THICKNESS, AND FILTER BLANKET WILL BE DESIGNATED IN PLANS.

CITY OF NORTH BRANCH — EST. 1881 — NORTH BRANCH

CITY OF NORTH BRANCH
HAND PLACED RIP RAP AT RCP OUTLETS
NO SCALE

2025 - STANDARD DETAIL
DETAIL NO.
STM-007

REV NO.	DATE	DESCRIPTION
1	04/01/2025	REVISION PER CITY REVIEW
2	04/24/2025	REVISION PER CITY REVIEW

DATE: 04/24/2025
DESIGN BY: MJM
DRAWN BY: MJM
CHECKED BY: CJD
DWG FILE: DETAILS
FILE NO.: 22-0030.00

I hereby certify that this plan, specification, or report was prepared by me or under my direct supervision and that I am a duly Licensed Professional Engineer under the laws of the State of Minnesota.

NOT FOR CONSTRUCTION

Signed: Christopher J. Dahn
Date: Lic. No. 58628

BOGART, PEDERSON & ASSOCIATES, INC.
LAND SURVEYING
CIVIL ENGINEERING
ENVIRONMENTAL SERVICES
13076 FIRST STREET, BECKER, MN 55308-9322
TEL: 763-262-8822 FAX: 763-262-8844

CEDAR RIDGE COMMUNITY LLC
CEDAR RIDGE COMMUNITY
City of North Branch, Chisago County, MN

DETAILS

SHEET NO.
C9.3

N:\Projects Current\22-0030.02 Betzler North Branch Plat\Civil\CAD Files\NB CoverSWPPP.dwg
3:14 PM
4/24/2025

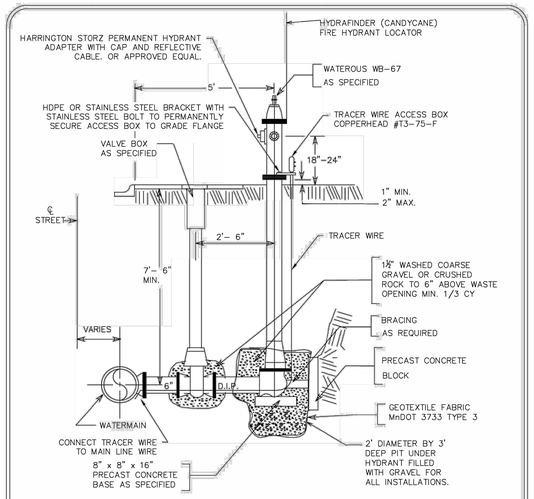

NOTE:
ALL HYDRANT LEADS SHALL BE TIED WITH ¾" GALVANIZED STEEL TIE RODS, EXTENDING FROM TEE TO VALVE AND FROM VALVE TO HYDRANT OR MEGA-LUG BRAND THRUST RETAINER GLANDS AT JOINTS (INCIDENTAL).

CITY OF NORTH BRANCH EST. 1881	CITY OF NORTH BRANCH TYPICAL HYDRANT ASSEMBLY INSTALLATION NO SCALE	2025 - STANDARD DETAIL DETAIL NO. WM-001

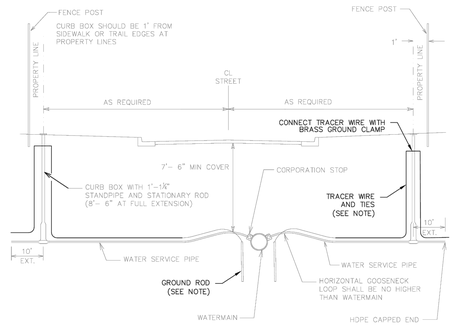

NOTES:
1. CURB BOXES INSTALLED IN AREAS WHERE BOULEVARD IS TO BE CUT AT A LATER DATE SHALL BE INSTALLED AT DEPTH REQUIRED, CURB BOX EXTENTION FOR BOXES EXCEEDING 7.5' IN LENGTH ARE TO BE BID AT CONTRACT PRICE AND SHALL INCLUDE STACK COUPLINGS, CONNECTIONS, ETC.
2. CURB BOX LOCATIONS SHALL BE MARKED WITH A STEEL FENCE POST PAINTED BLUE.
3. WATER SERVICE SHALL BE INSTALLED WITH A HORIZONTAL SEPARATION OF THREE FEET (3') FROM THE SANITARY SEWER SERVICE AND SHALL BE INSTALLED UPSTREAM OF THE SANITARY SEWER SERVICE.
4. CURB BOXES LOCATED IN A DRIVEWAY OR PARKING LOT SHALL BE COVERED WITH A FORD A-1 METER BOX COVER OR ENGINEER APPROVED EQUAL.
5. HDPE WATER SERVICES – INSTALL MAGNESIUM GROUNDING ANODE ROD, LOCATING WIRE, WIRE CONNECTORS, AND TIES PER SPECIFICATIONS.

CITY OF NORTH BRANCH EST. 1881	CITY OF NORTH BRANCH TYPICAL WATER SERVICE NO SCALE	2025 - STANDARD DETAIL DETAIL NO. WM-002

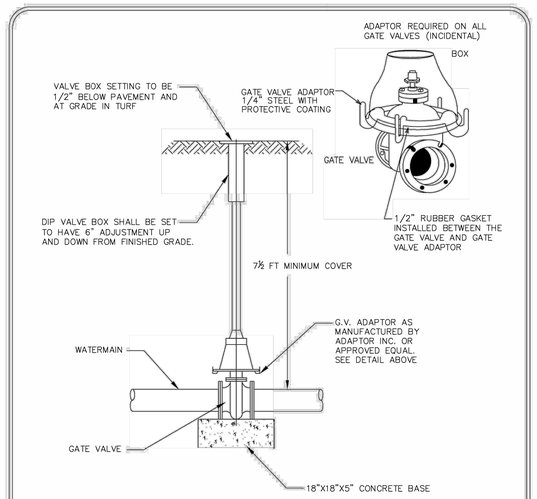

NOTES:
1. VALVE BOX INSERTS ARE NOT ALLOWED UNLESS APPROVED BY THE ENGINEER.
2. VALVE BOXES SHALL BE INSTALLED PLUMB AND SHALL ALLOW A 4" P.V.C. PIPE TO PASS ENTIRELY OVER THE GATE VALVE NUT AFTER INSTALLATION IS COMPLETE.
3. ALL VALVES SHALL BE TIED WITH 3/4" THREADED TIE RODS TO THE MAIN. MEGA LUGS MAY BE USED IN LIEU OF TIE RODS.
4. THE INITIAL & FINAL RAISING OF VALVE BOXES SHALL BE CONSIDERED INCIDENTAL TO THE PROJECT.
5. ROCK BEDDING FOR DRAINAGE SHALL BE INSTALLED AT GATE VALVE, AS DIRECTED BY THE ENGINEER.

CITY OF NORTH BRANCH EST. 1881	CITY OF NORTH BRANCH VALVE BOX INSTALLATION NO SCALE	2025 - STANDARD DETAIL DETAIL NO. WM-003

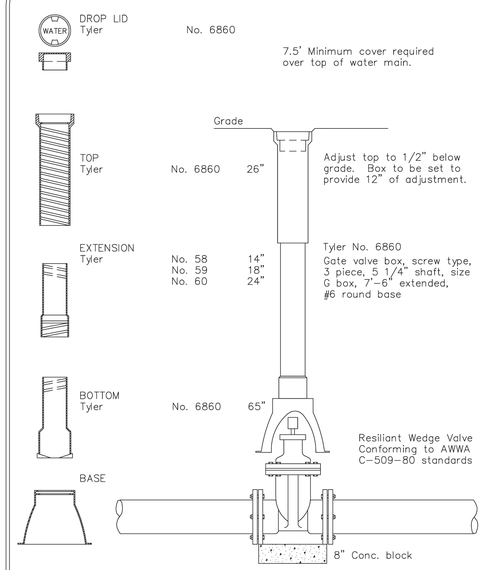

CITY OF NORTH BRANCH EST. 1881	CITY OF NORTH BRANCH BUTTERFLY VALVE INSTALLATION NO SCALE	2025 - STANDARD DETAIL DETAIL NO. WM - 004

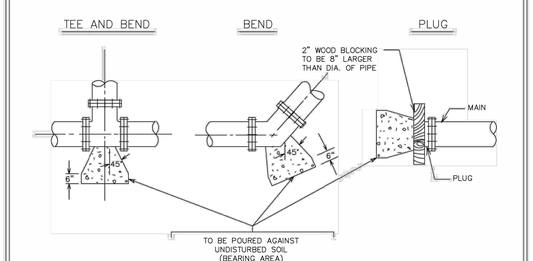

PIPE SIZE	BEARING AREA
6"	4.0 SQ. FT.
8"	6.0 "
10" – 12"	12.0 "
16"	20.0 "

NOTE:
1. RETAINER GLANDS/MEGA LUGS ARE TO BE USED AS SPECIFIED AT ALL CHANGES IN DIRECTION, FITTINGS, AND VALVES.
2. THRUST BLOCKING TO BE USED FOR BENDS 22-1/2" AND OVER.
3. THRUST BLOCKING SHALL ONLY BE USED WHERE WORKING PRESSURES ARE LESS THAN 150 PSI.
4. COVER FITTINGS WITH POLYETHYLENE (4 MIL) PRIOR TO POURING CONCRETE.
5. CONCRETE SHALL HAVE 2500 PSI, 28 DAY STRENGTH.

CITY OF NORTH BRANCH EST. 1881	CITY OF NORTH BRANCH THRUST BLOCKING NO SCALE	2025 - STANDARD DETAIL DETAIL NO. WM-005

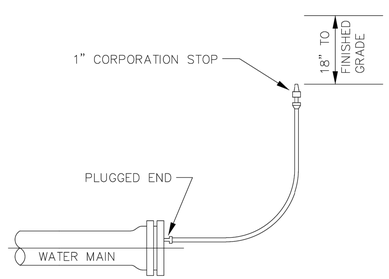

AFTER MEETING TEST REQUIREMENTS THE AIR BLEED LINE SHALL BE DISCONNECTED AT THE PLUG WITH NO ADDITIONAL COMPENSATION.

CITY OF NORTH BRANCH EST. 1881	CITY OF NORTH BRANCH AIR BLEED INSTALLATION DETAIL NO SCALE	2025 - STANDARD DETAIL DETAIL NO. WM - 007

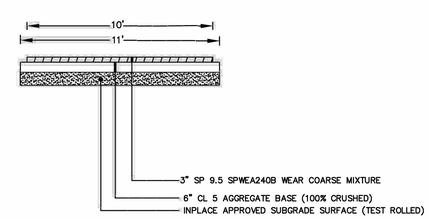

10' WIDE TRAIL TYPICAL SECTION

CITY OF NORTH BRANCH EST. 1881	CITY OF NORTH BRANCH TYPICAL BITUMINOUS TRAIL NO SCALE	2025 - STANDARD DETAIL DETAIL NO. RDW - 011

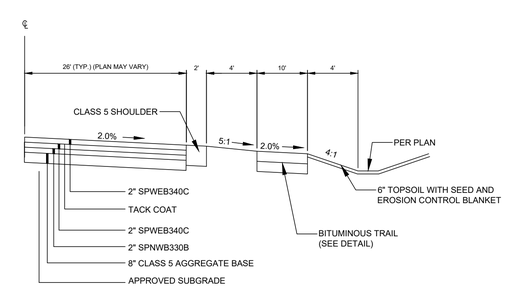

TYPICAL COUNTY ROAD TURN LANE & REPLACEMENT
N.T.S.

REV NO.	DATE	DESCRIPTION
1	04/01/2025	REVISION PER CITY REVIEW
2	04/24/2025	REVISION PER CITY REVIEW

DATE: 04/24/2025
DESIGN BY: MJM
DRAWN BY: MJM
CHECKED BY: CJD
DWG FILE: DETAILS
FILE NO.: 22-0030.00

I hereby certify that this plan, specification, or report was prepared by me or under my direct supervision and that I am a duly Licensed Professional Engineer under the laws of the State of Minnesota.

Signed: Christopher J. Dahn
Date: Lic. No. 58628

NOT FOR CONSTRUCTION

BOGART, PEDERSON & ASSOCIATES, INC.
LAND SURVEYING
CIVIL ENGINEERING
ENVIRONMENTAL SERVICES
13076 FIRST STREET, BECKER, MN 55308-9322
TEL: 763-262-9822 FAX: 763-262-9844

CEDAR RIDGE COMMUNITY LLC
CEDAR RIDGE COMMUNITY
City of North Branch, Chisago County, MN

DETAILS

SHEET NO.
C9.4

N:\Projects Current\22-0030.02 Belden North Branch Plat\Civil\CAD Files\NB Cover\SWPPP.dwg
4/24/2025 3:14 PM

CONCRETE FOUNDATION PREPARATION (OR EQUAL)

vital™ cluster box unit - 1570 "F" Series

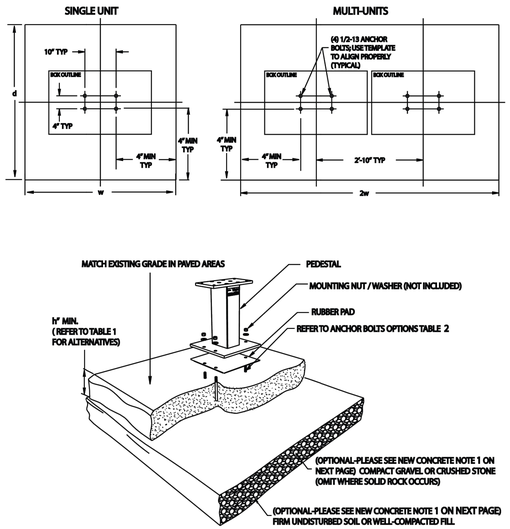

MAILBOX FOUNDATION
N.T.S.

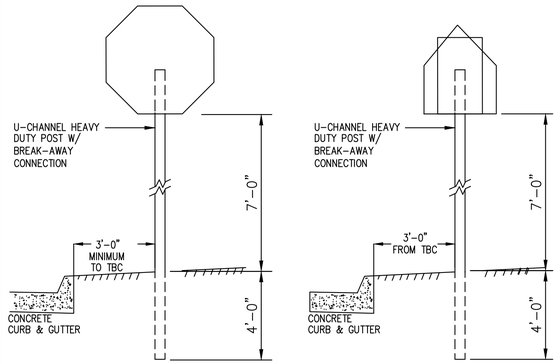

TRAFFIC SIGNS
N.T.S.

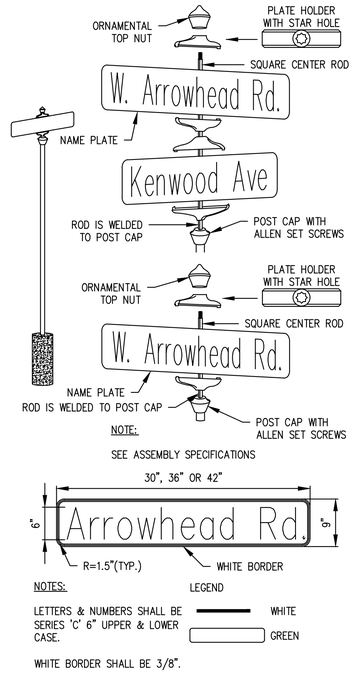

TRAFFIC SIGNS
N.T.S.

ACORN

The acorn-shaped luminaire captures the look of yesteryear, while utilizing the latest LED (light emitting diode) technology to provide maximum efficiency.

Having external prismatic optics incorporated into the fixture globe, light output of the LED array is optimized to work with the refractive optics to offer excellent light distribution and overall fixture efficiency.

The housing is made of cast aluminum and is finished with a black, polyester powder paint to ensure maximum durability.

Height: 46.25" **Width:** 16" **Weight:** 40 lbs. **Color:** Black **Watt:** 60 LED
Max EPA: 1.8 sq. ft. **Made of:** Cast Aluminum **IES Lighting Classification:** Type 2

STREET LIGHTING
N.T.S.

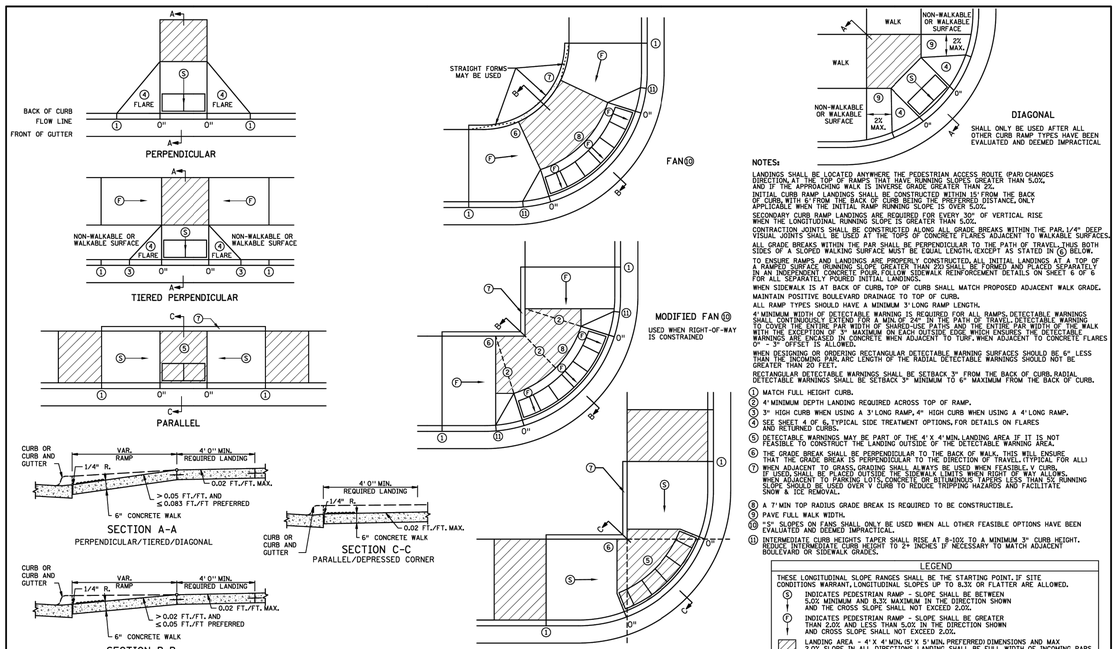

NOTES:

LANDINGS SHALL BE LOCATED ANYWHERE THE PEDESTRIAN ACCESS ROUTE (PAR) CHANGES DIRECTION, AT THE TOP OF RAMPS THAT HAVE RUNNING SLOPES GREATER THAN 5.0%, AND IF THE APPROACHING WALK IS INVERSE GRADE GREATER THAN 2%.

INITIAL CURB RAMP LANDINGS SHALL BE CONSTRUCTED WITHIN 15' FROM THE BACK OF CURB, WITH 6' FROM THE BACK OF CURB BEING THE PREFERRED DISTANCE, ONLY APPLICABLE WHEN THE INITIAL RAMP RUNNING SLOPE IS OVER 5.0%.

SECONDARY CURB RAMP LANDINGS ARE REQUIRED FOR EVERY 30" OF VERTICAL RISE WHEN THE LONGITUDINAL RUNNING SLOPE IS GREATER THAN 5.0%.

CONTRACTION JOINTS SHALL BE CONSTRUCTED ALONG ALL GRADE BREAKS WITHIN THE PAR. 1/4" DEEP VISUAL JOINTS SHALL BE USED AT THE TOPS OF CONCRETE FLARES ADJACENT TO WALKABLE SURFACES.

ALL GRADE BREAKS WITHIN THE PAR SHALL BE PERPENDICULAR TO THE PATH OF TRAVEL, THUS BOTH SIDES OF A SLOPED WALKING SURFACE MUST BE EQUAL LENGTH, (EXCEPT AS STATED IN (5) BELOW.

TO ENSURE RAMPS AND LANDINGS ARE PROPERLY CONSTRUCTED, ALL INITIAL LANDINGS AT A TOP OF A RAMPED SURFACE (RUNNING SLOPE GREATER THAN 2%) SHALL BE FORMED AND PLACED SEPARATELY IN AN INDEPENDENT CONCRETE POUR. FOLLOW SIDEWALK REINFORCEMENT DETAILS ON SHEET 6 OF 6 FOR ALL SEPARATELY POURED INITIAL LANDINGS.

WHEN SIDEWALK IS AT BACK OF CURB, TOP OF CURB SHALL MATCH PROPOSED ADJACENT WALK GRADE.

MAINTAIN POSITIVE BOULEVARD DRAINAGE TO TOP OF CURB.

ALL RAMP TYPES SHOULD HAVE A MINIMUM 3' LONG RAMP LENGTH.

4' MINIMUM WIDTH OF DETECTABLE WARNING IS REQUIRED FOR ALL RAMPS. DETECTABLE WARNINGS SHALL CONTINUOUSLY EXTEND FOR A MIN. OF 24" IN THE PATH OF TRAVEL. DETECTABLE WARNING TO COVER THE ENTIRE PAR WIDTH OF SHARED-USE PATHS AND THE ENTIRE PAR WIDTH OF THE WALK WITH THE EXCEPTION OF 3" MAXIMUM ON EACH OUTSIDE EDGE, WHICH ENSURES THE DETECTABLE WARNINGS ARE ENCASED IN CONCRETE WHEN ADJACENT TO TURF. WHEN ADJACENT TO CONCRETE FLARES 0" - 3" OFFSET IS ALLOWED.

WHEN DESIGNING OR ORDERING RECTANGULAR DETECTABLE WARNING SURFACES SHOULD BE 6" LESS THAN THE INCOMING PAR, ARC LENGTH OF THE RADIAL DETECTABLE WARNINGS SHOULD NOT BE GREATER THAN 20 FEET.

RADIAL DETECTABLE WARNINGS SHALL BE SETBACK 3" MINIMUM TO 6" MAXIMUM FROM THE BACK OF CURB.

1. MATCH FULL CURB HEIGHT.
2. 4" MINIMUM DEPTH LANDING REQUIRED ACROSS TOP OF RAMP.
3. 3" HIGH CURB WHEN USING A 3' LONG RAMP, 4" HIGH CURB WHEN USING A 4' LONG RAMP.
4. SEE SHEET 4 OF 6 TYPICAL SIDE TREATMENT OPTIONS, FOR DETAILS ON FLARES AND RETURNED CURBS.
5. DETECTABLE WARNINGS MAY BE PART OF THE 4' X 4' MIN. LANDING AREA IF IT IS NOT FEASIBLE TO CONSTRUCT THE LANDING OUTSIDE OF THE DETECTABLE WARNING AREA.
6. THE GRADE BREAK SHALL BE PERPENDICULAR TO THE BACK OF WALK. THIS WILL ENSURE THAT THE GRADE BREAK IS PERPENDICULAR TO THE DIRECTION OF TRAVEL. (TYPICAL FOR ALL)
7. WHEN ADJACENT TO GRASS, GRADING SHALL ALWAYS BE USED WHEN FEASIBLE. V CURB, IF USED, SHALL BE PLACED OUTSIDE THE SIDEWALK LIMITS WHEN RIGHT OF WAY ALLOWS. WHEN ADJACENT TO PARKING LOTS, CONCRETE OR BITUMINOUS TAPERS LESS THAN 5% RUNNING SLOPE SHOULD BE USED OVER V CURB TO REDUCE TRIPPING HAZARDS AND FACILITATE SNOW & ICE REMOVAL.
8. A 7' MIN TOP RADIUS GRADE BREAK IS REQUIRED TO BE CONSTRUCTIBLE.
9. PAVE FULL WALK WIDTH.
10. "5" SLOPES ON FANS SHALL ONLY BE USED WHEN ALL OTHER FEASIBLE OPTIONS HAVE BEEN EVALUATED AND DEEMED IMPRACTICAL.
11. INTERMEDIATE CURB HEIGHTS TAPER SHALL RISE AT 8-10% TO A MINIMUM 3" CURB HEIGHT. REDUCE INTERMEDIATE CURB HEIGHT TO 2+ INCHES IF NECESSARY TO MATCH ADJACENT BOULEVARD OR SIDEWALK GRADES.

LEGEND

THESE LONGITUDINAL SLOPE RANGES SHALL BE THE STARTING POINT. IF SITE CONDITIONS WARRANT, LONGITUDINAL SLOPES UP TO 8.3% OR FLATTER ARE ALLOWED.

- (S) INDICATES PEDESTRIAN RAMP - SLOPE SHALL BE BETWEEN 5.0% MINIMUM AND 8.3% MAXIMUM IN THE DIRECTION SHOWN AND THE CROSS SLOPE SHALL NOT EXCEED 2.0%.
- (F) INDICATES PEDESTRIAN RAMP - SLOPE SHALL BE GREATER THAN 2.0% AND LESS THAN 5.0% IN THE DIRECTION SHOWN AND CROSS SLOPE SHALL NOT EXCEED 2.0%.
- LANDING AREA - 4' X 4' MIN. (5' X 5' MIN. PREFERRED) DIMENSIONS AND MAX 2.0% SLOPE IN ALL DIRECTIONS. LANDING SHALL BE FULL WIDTH OF INCOMING PARS.
- X" CURB HEIGHT

REVISION:
APPROVED: 11-04-2021
OPERATIONS DIVISION

MINNESOTA DEPARTMENT OF TRANSPORTATION

STANDARD PLAN 5-297.250 | 1 OF 6
APPROVED: 11-04-2021
REVISED:
TRAFFIC ENGINEERING STATE DESIGN ENGINEER

PEDESTRIAN CURB RAMP DETAILS

STATE PROJ. NO. (TH) SHEET NO. OF SHEETS

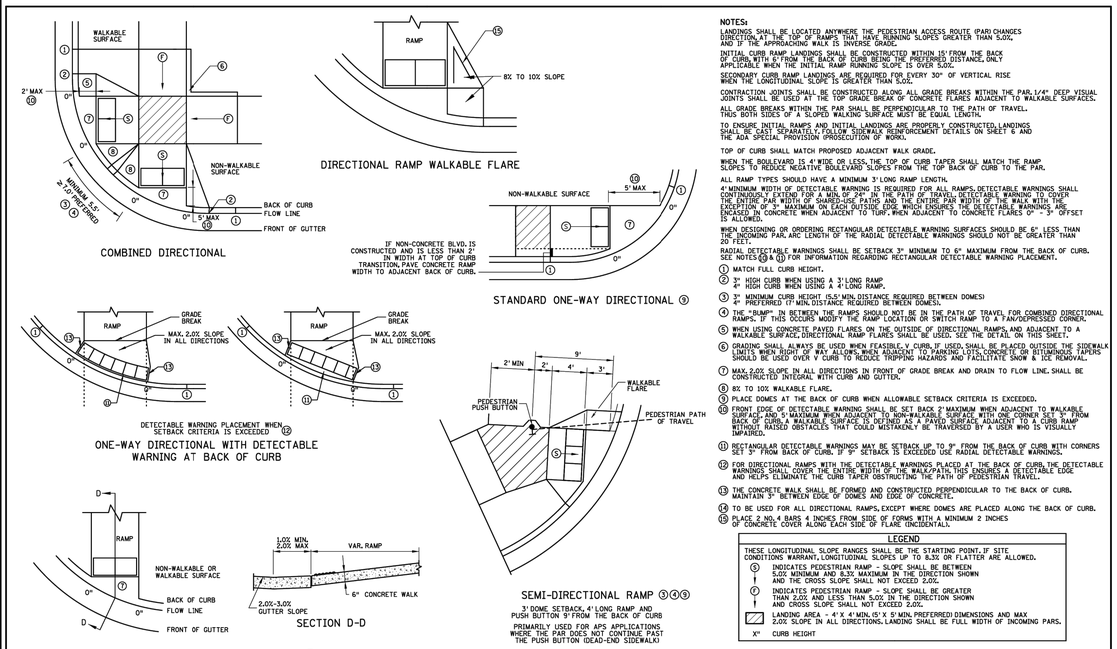

NOTES:

LANDINGS SHALL BE LOCATED ANYWHERE THE PEDESTRIAN ACCESS ROUTE (PAR) CHANGES DIRECTION, AT THE TOP OF RAMPS THAT HAVE RUNNING SLOPES GREATER THAN 5.0%, AND IF THE APPROACHING WALK IS INVERSE GRADE.

INITIAL CURB RAMP LANDINGS SHALL BE CONSTRUCTED WITHIN 15' FROM THE BACK OF CURB, WITH 6' FROM THE BACK OF CURB BEING THE PREFERRED DISTANCE, ONLY APPLICABLE WHEN THE INITIAL RAMP RUNNING SLOPE IS OVER 5.0%.

SECONDARY CURB RAMP LANDINGS ARE REQUIRED FOR EVERY 30" OF VERTICAL RISE WHEN THE LONGITUDINAL SLOPE IS GREATER THAN 5.0%.

CONTRACTION JOINTS SHALL BE CONSTRUCTED ALONG ALL GRADE BREAKS WITHIN THE PAR. 1/4" DEEP VISUAL JOINTS SHALL BE USED AT THE TOP GRADE BREAK OF CONCRETE FLARES ADJACENT TO WALKABLE SURFACES.

ALL GRADE BREAKS WITHIN THE PAR SHALL BE PERPENDICULAR TO THE PATH OF TRAVEL. THUS BOTH SIDES OF A SLOPED WALKING SURFACE MUST BE EQUAL LENGTH.

TO ENSURE INITIAL RAMPS AND INITIAL LANDINGS ARE PROPERLY CONSTRUCTED, LANDINGS SHALL BE CAST SEPARATELY. FOLLOW SIDEWALK REINFORCEMENT DETAILS ON SHEET 6 AND THE ADA SPECIAL PROVISION (PROCEDURE OF WORK).

TOP OF CURB SHALL MATCH PROPOSED ADJACENT WALK GRADE.

WHEN THE BOULEVARD IS 4' WIDE OR LESS, THE TOP OF CURB TAPER SHALL MATCH THE RAMP SLOPES TO REDUCE NEGATIVE BOULEVARD SLOPES FROM THE TOP BACK OF CURB TO THE PAR.

ALL RAMP TYPES SHOULD HAVE A MINIMUM 3' LONG RAMP LENGTH.

4' MINIMUM WIDTH OF DETECTABLE WARNING IS REQUIRED FOR ALL RAMPS. DETECTABLE WARNINGS SHALL CONTINUOUSLY EXTEND FOR A MIN. OF 24" IN THE PATH OF TRAVEL. DETECTABLE WARNING TO COVER THE ENTIRE PAR WIDTH OF SHARED-USE PATHS AND THE ENTIRE PAR WIDTH OF THE WALK WITH THE EXCEPTION OF 3" MAXIMUM ON EACH OUTSIDE EDGE, WHICH ENSURES THE DETECTABLE WARNINGS ARE ENCASED IN CONCRETE WHEN ADJACENT TO TURF. WHEN ADJACENT TO CONCRETE FLARES 0" - 3" OFFSET IS ALLOWED.

WHEN DESIGNING OR ORDERING RECTANGULAR DETECTABLE WARNING SURFACES SHOULD BE 6" LESS THAN THE INCOMING PAR, ARC LENGTH OF THE RADIAL DETECTABLE WARNINGS SHOULD NOT BE GREATER THAN 20 FEET.

RADIAL DETECTABLE WARNINGS SHALL BE SETBACK 3" MINIMUM TO 6" MAXIMUM FROM THE BACK OF CURB. SEE NOTES (8) & (11) FOR INFORMATION REGARDING RECTANGULAR DETECTABLE WARNING PLACEMENT.

1. MATCH FULL CURB HEIGHT.
2. 3" HIGH CURB WHEN USING A 3' LONG RAMP
4" HIGH CURB WHEN USING A 4' LONG RAMP.
3. 3" MINIMUM CURB HEIGHT (5.5" MIN. DISTANCE REQUIRED BETWEEN DOMES)
4" PREFERRED (7" MIN. DISTANCE REQUIRED BETWEEN DOMES).
4. THE "BUMP" IN BETWEEN THE RAMPS SHOULD NOT BE IN THE PATH OF TRAVEL. FOR COMBINED DIRECTIONAL RAMPS, IF THIS OCCURS MODIFY THE RAMP LOCATION OR SWITCH RAMP TO A FAN/DEPRESSED CORNER.
5. WHEN USING CONCRETE PAVED FLARES ON THE OUTSIDE OF DIRECTIONAL RAMPS, AND ADJACENT TO A WALKABLE SURFACE, DIRECTIONAL RAMP FLARES SHALL BE USED. SEE THE DETAIL ON THIS SHEET.
6. GRADING SHALL ALWAYS BE USED WHEN FEASIBLE. V CURB, IF USED, SHALL BE PLACED OUTSIDE THE SIDEWALK LIMITS WHEN RIGHT OF WAY ALLOWS. WHEN ADJACENT TO PARKING LOTS, CONCRETE OR BITUMINOUS TAPERS SHOULD BE USED OVER V CURB TO REDUCE TRIPPING HAZARDS AND FACILITATE SNOW & ICE REMOVAL.
7. MAX 2.0% SLOPE IN ALL DIRECTIONS IN FRONT OF GRADE BREAK AND DRAIN TO FLOW LINE. SHALL BE CONSTRUCTED INTEGRAL WITH CURB AND GUTTER.
8. 8% TO 10% WALKABLE FLARE.
9. PLACE DOMES AT THE BACK OF CURB WHEN ALLOWABLE SETBACK CRITERIA IS EXCEEDED.
10. FRONT EDGE OF DETECTABLE WARNING SHALL BE SET BACK 2" MAXIMUM WHEN ADJACENT TO WALKABLE SURFACE AND 9" MAXIMUM WHEN ADJACENT TO NON-WALKABLE SURFACE WITH ONE CORNER SET 9" FROM BACK OF CURB. A WALKABLE SURFACE IS DEFINED AS A PAVED SURFACE ADJACENT TO A CURB RAMP WITHOUT RAISED OBSTACLES THAT WOULD ALSO MAKE IT TRAVERSED BY A USER WHO IS VISUALLY IMPAIRED.
11. RECTANGULAR DETECTABLE WARNINGS MAY BE SETBACK UP TO 9" FROM THE BACK OF CURB WITH CORNERS SET 3" FROM BACK OF CURB. IF 9" SETBACK IS EXCEEDED USE RADIAL DETECTABLE WARNINGS.
12. FOR DIRECTIONAL RAMPS WITH THE DETECTABLE WARNINGS PLACED AT THE BACK OF CURB, THE DETECTABLE WARNINGS SHALL COVER THE ENTIRE WIDTH OF THE WALKPATH, THUS ENSURING A DETECTABLE EDGE AND HELPS ELIMINATE THE CURB TAPER OBSTRUCTING THE PATH OF PEDESTRIAN TRAVEL.
13. THE CONCRETE WALK SHALL BE FORMED AND CONSTRUCTED PERPENDICULAR TO THE BACK OF CURB. MAINTAIN 3" BETWEEN EDGE OF DOMES AND EDGE OF CONCRETE.
14. TO BE USED FOR ALL DIRECTIONAL RAMPS, EXCEPT WHERE DOMES ARE PLACED ALONG THE BACK OF CURB.
15. PLACE 2 NO. 4 BARS 4 INCHES FROM SIDE FLARES WITH A MINIMUM 2 INCHES OF CONCRETE COVER ALONG EACH SIDE OF FLARE (INCIDENTAL).

LEGEND

THESE LONGITUDINAL SLOPE RANGES SHALL BE THE STARTING POINT. IF SITE CONDITIONS WARRANT, LONGITUDINAL SLOPES UP TO 8.3% OR FLATTER ARE ALLOWED.

- (S) INDICATES PEDESTRIAN RAMP - SLOPE SHALL BE BETWEEN 5.0% MINIMUM AND 8.3% MAXIMUM IN THE DIRECTION SHOWN AND THE CROSS SLOPE SHALL NOT EXCEED 2.0%.
- (F) INDICATES PEDESTRIAN RAMP - SLOPE SHALL BE GREATER THAN 2.0% AND LESS THAN 5.0% IN THE DIRECTION SHOWN AND CROSS SLOPE SHALL NOT EXCEED 2.0%.
- LANDING AREA - 4' X 4' MIN. (5' X 5' MIN. PREFERRED) DIMENSIONS AND MAX 2.0% SLOPE IN ALL DIRECTIONS. LANDING SHALL BE FULL WIDTH OF INCOMING PARS.
- X" CURB HEIGHT

REVISION:
APPROVED: 11-04-2021
OPERATIONS DIVISION

MINNESOTA DEPARTMENT OF TRANSPORTATION

STANDARD PLAN 5-297.250 | 2 OF 6
APPROVED: 11-04-2021
REVISED:
TRAFFIC ENGINEERING STATE DESIGN ENGINEER

PEDESTRIAN CURB RAMP DETAILS

STATE PROJ. NO. (T.H.) SHEET NO. OF SHEETS

REV NO.	DATE	DESCRIPTION
1	04/01/2025	REVISION PER CITY REVIEW
2	04/24/2025	REVISION PER CITY REVIEW

DATE: 04/24/2025
DESIGN BY: MJM
DRAWN BY: MJM
CHECKED BY: CJD
DWG FILE: DETAILS
FILE NO.: 22-0030.00

I hereby certify that this plan, specification, or report was prepared by me or under my direct supervision and that I am a duly Licensed Professional Engineer under the laws of the State of Minnesota.

NOT FOR CONSTRUCTION

Signed: Christopher J. Dahn
Date: Lic. No. 58628

BOGART, PEDERSON & ASSOCIATES, INC.
LAND SURVEYING
CIVIL ENGINEERING
ENVIRONMENTAL SERVICES
13070 FIRST STREET, BECKER, MN 55308-9322
TEL: 763-206-3922 FAX: 763-206-3944

CEDAR RIDGE COMMUNITY LLC
CEDAR RIDGE COMMUNITY
City of North Branch, Chisago County, MN

DETAILS

SHEET NO.
C9.5

N:\Projects Current\22-0030.02 Belden North Branch Plat\Civil\CAD Files\NB Cover\SWPPP.dwg 4/24/2025 3:14 PM

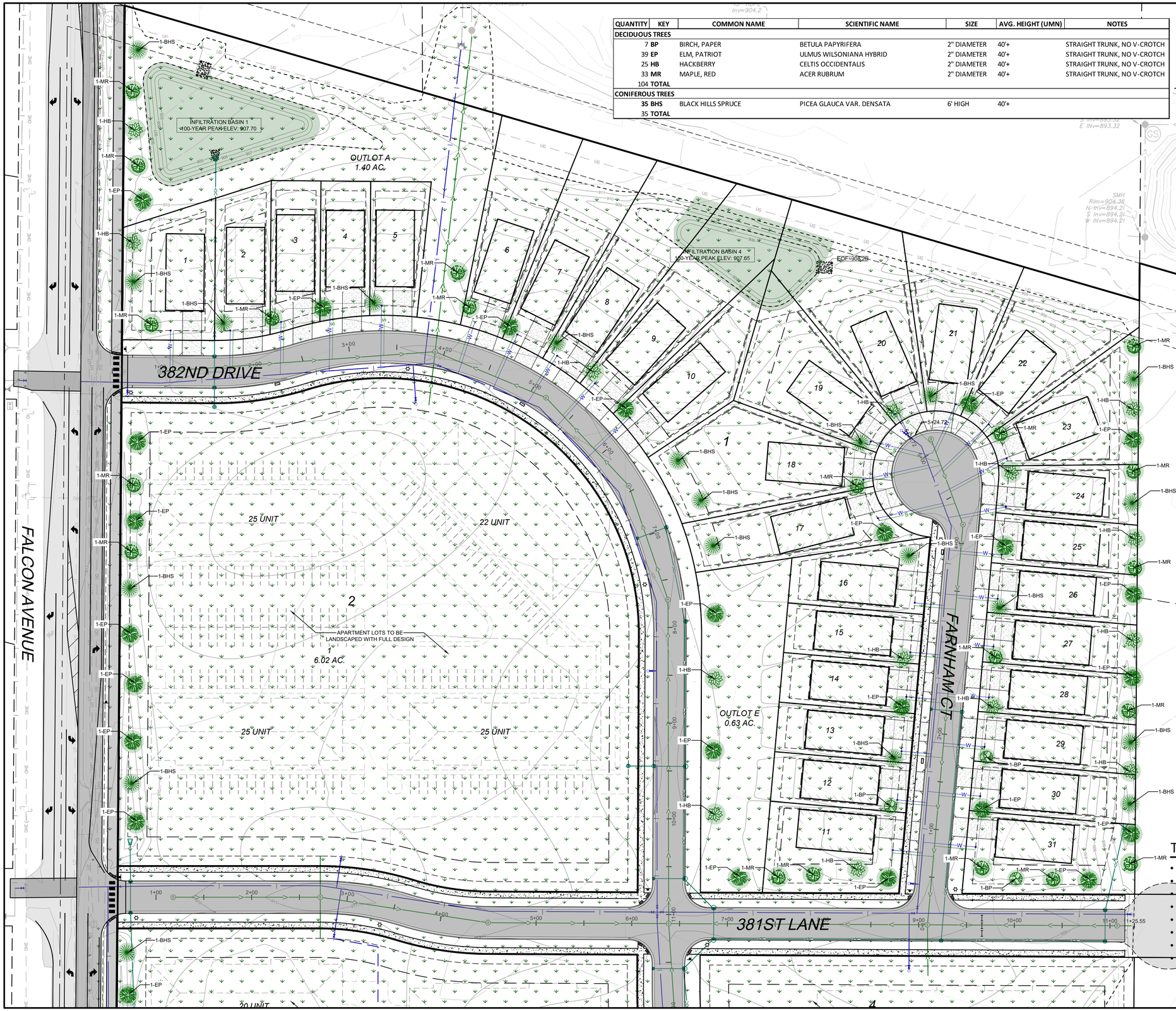

QUANTITY	KEY	COMMON NAME	SCIENTIFIC NAME	SIZE	AVG. HEIGHT (UMN)	NOTES
DECIDUOUS TREES						
7	**BP**	BIRCH, PAPER	BETULA PAPYRIFERA	2" DIAMETER	40'+	STRAIGHT TRUNK, NO V-CROTCH
39	**EP**	ELM, PATRIOT	ULMUS WILSONIANA HYBRID	2" DIAMETER	40'+	STRAIGHT TRUNK, NO V-CROTCH
25	**HB**	HACKBERRY	CELTIS OCCIDENTALIS	2" DIAMETER	40'+	STRAIGHT TRUNK, NO V-CROTCH
33	**MR**	MAPLE, RED	ACER RUBRUM	2" DIAMETER	40'+	STRAIGHT TRUNK, NO V-CROTCH
104	**TOTAL**					
CONIFEROUS TREES						
35	**BHS**	BLACK HILLS SPRUCE	PICEA GLAUCA VAR. DENSATA	6' HIGH	40'+	
35	**TOTAL**					

0' 50' 100'
SCALE: 1"=50'

LEGEND:

- PROPOSED BITUMINOUS PAVEMENT
- PROPOSED CONCRETE SIDEWALK
- PROPOSED TURF ESTABLISHMENT
- PROPOSED INFILTRATION SEED EST.
- PROPOSED DECIDUOUS TREE
- PROPOSED CONIFEROUS TREE
- PROPOSED SHRUB

LANDSCAPE REQUIREMENTS:

PER CITY OF NORTH BRANCH ZONING ORDINANCE:
ALL LANDSCAPING INCORPORATED IN SAID PLAN SHALL CONFORM TO THE FOLLOWING STANDARDS AND CRITERIA:

A. ALL PLANTS MUST AT LEAST EQUAL THE FOLLOWING MINIMUM SIZE:

	POTTED/BARE ROOT OR BALLED & BURLAPPED
SHADE TREES	2-INCH DIAMETER
HALF TREES	1-1/2 INCH DIAMETER
EVERGREEN	6 FEET HIGH
TALL SHRUBS & HEDGE MAT.	6 FEET HIGH
LOW SHRUBS - DECIDUOUS	24 - 30 INCHES
-EVERGREEN	24 - 30 INCHES
-SPREADING EVERGREENS	18 - 24 INCHES

B. LANDSCAPE GUARANTEE: ALL NEW PLANTS SHALL BE GUARANTEED FOR TWO (2) FULL YEARS FROM THE TIME PLANTING HAS BEEN COMPLETED. ALL PLANTS SHALL BE ALIVE AND IN SATISFACTORY GROWTH AT THE END OF THE GUARANTEE PERIOD OR BE REPLACED.

(SEE CITY ORDINANCE FOR FULL REQUIREMENTS)

LANDSCAPE NOTES:

1. ALL AREAS DISTURBED DURING CONSTRUCTION SHALL BE RESTORED AND VEGETATED AS SOON AS POSSIBLE. ANY FINISHED AREAS SHALL BE SEEDED AND MULCHED WITHIN 7 DAYS AFTER FINISHED GRADING IS COMPLETED IN ACCORDANCE TO MN/DOT 2575.
2. PLANTING SOIL SHALL CONSIST 1:1:1 CONSISTING OF 33% SELECT LOAMY TOPSOIL, 33% PEAT MOSS, 33% PIT RUN SAND.
3. ALL DISTURBED AREAS SHALL BE REVEGETATED WITH MN/DOT SEED MIX, MULCHED, & DISK ANCHORED, PER THE FOLLOWING SCHEDULE:

SEED MIX 25-131: 220 LB/AC.
INFILTRATION BASIN SEED MIX 33-261: 35 LB/AC.
MULCH TYPE 3: 2 TONS/AC.

TREE PRESERVATION NOTES:

- TREE REMOVAL AREA: 4.17 ACRES
- TREE PRESERVATION AREA: 0.04 ACRES
- TREE PRESERVATION %: 1%
- 50% OF TREE REMOVAL AREA: 2.08 ACRES
- ASSUMPTIONS FOR REPLACEMENT: 500 S.F. OF COVERAGE PER TREE
- 2.08 ACRES / 500 S.F. 182 TREES TO BE REPLACED
- TREES PROPOSED: 139
- MISSING TREES TO BE PAID: 43

REV NO.	DATE	DESCRIPTION
1	04/01/2025	REVISION PER CITY REVIEW
2	04/24/2025	REVISION PER CITY REVIEW

DATE: 04/24/2025
DESIGN BY: MJM
DRAWN BY: MJM
CHECKED BY: CJD
DWG FILE: EROSION
FILE NO.: 22-0030.00

I hereby certify that this plan, specification, or report was prepared by me or under my direct supervision and that I am a duly Licensed Professional Engineer under the laws of the State of Minnesota.

NOT FOR CONSTRUCTION

Signed: Christopher J. Dahn
Date: Lic. No. 58628

BOGART, PEDERSON & ASSOCIATES, INC.
LAND SURVEYING
CIVIL ENGINEERING
ENVIRONMENTAL SERVICES
13079 FIRST STREET, BECKER, MN 55308-9322
TEL: 763-262-3822 FAX: 763-262-3844

CEDAR RIDGE COMMUNITY LLC
CEDAR RIDGE COMMUNITY
City of North Branch, Chisago County, MN

NORTH LANDSCAPE PLAN

SHEET NO.
C10.1

0' 50' 100'
SCALE: 1"=50'

LEGEND:

- PROPOSED BITUMINOUS PAVEMENT
- PROPOSED CONCRETE SIDEWALK
- PROPOSED TURF ESTABLISHMENT
- PROPOSED INFILTRATION SEED EST.
- PROPOSED DECIDUOUS TREE
- PROPOSED CONIFEROUS TREE
- PROPOSED SHRUB

LANDSCAPE REQUIREMENTS:

PER CITY OF NORTH BRANCH ZONING ORDINANCE:
ALL LANDSCAPING INCORPORATED IN SAID PLAN SHALL CONFORM TO THE FOLLOWING STANDARDS AND CRITERIA:

A. ALL PLANTS MUST AT LEAST EQUAL THE FOLLOWING MINIMUM SIZE:

	POTTED/BARE ROOT OR BALLED & BURLAPPED
SHADE TREES	2-INCH DIAMETER
HALF TREES	1-1/2 INCH DIAMETER
EVERGREEN	6 FEET HIGH
TALL SHRUBS & HEDGE MAT.	6 FEET HIGH
LOW SHRUBS - DECIDUOUS	24 - 30 INCHES
-EVERGREEN	24 - 30 INCHES
-SPREADING EVERGREENS	18 - 24 INCHES

B. LANDSCAPE GUARANTEE: ALL NEW PLANTS SHALL BE GUARANTEED FOR TWO (2) FULL YEARS FROM THE TIME PLANTING HAS BEEN COMPLETED. ALL PLANTS SHALL BE ALIVE AND IN SATISFACTORY GROWTH AT THE END OF THE GUARANTEE PERIOD OR BE REPLACED.

(SEE CITY ORDINANCE FOR FULL REQUIREMENTS)

TREE PRESERVATION NOTES:

- TREE REMOVAL AREA: 4.17 ACRES
- TREE PRESERVATION AREA: 0.04 ACRES
- TREE PRESERVATION %: 1%
- 50% OF TREE REMOVAL AREA: 2.08 ACRES
- ASSUMPTIONS FOR REPLACEMENT: 500 S.F. OF COVERAGE PER TREE
- 2.08 ACRES / 500 S.F. 182 TREES TO BE REPLACED
- TREES PROPOSED: 139
- MISSING TREES TO BE PAID: 43

QUANTITY	KEY	COMMON NAME	SCIENTIFIC NAME	SIZE	AVG. HEIGHT (UMN)	NOTES
DECIDUOUS TREES						
7	**BP**	BIRCH, PAPER	BETULA PAPYRIFERA	2" DIAMETER	40'+	STRAIGHT TRUNK, NO V-CROTCH
39	**EP**	ELM, PATRIOT	ULMUS WILSONIANA HYBRID	2" DIAMETER	40'+	STRAIGHT TRUNK, NO V-CROTCH
25	**HB**	HACKBERRY	CELTIS OCCIDENTALIS	2" DIAMETER	40'+	STRAIGHT TRUNK, NO V-CROTCH
33	**MR**	MAPLE, RED	ACER RUBRUM	2" DIAMETER	40'+	STRAIGHT TRUNK, NO V-CROTCH
104	**TOTAL**					
CONIFEROUS TREES						
35	**BHS**	BLACK HILLS SPRUCE	PICEA GLAUCA VAR. DENSATA	6' HIGH	40'+	
35	**TOTAL**					

LANDSCAPE NOTES:

1. ALL AREAS DISTURBED DURING CONSTRUCTION SHALL BE RESTORED AND VEGETATED AS SOON AS POSSIBLE. ANY FINISHED AREAS SHALL BE SEEDED AND MULCHED WITHIN 7 DAYS AFTER FINISHED GRADING IS COMPLETED IN ACCORDANCE TO MN/DOT 2575.
2. PLANTING SOIL SHALL CONSIST 1:1:1 CONSISTING OF 33% SELECT LOAMY TOPSOIL, 33% PEAT MOSS, 33% PIT RUN SAND.
3. ALL DISTURBED AREAS SHALL BE REVEGETATED WITH MN/DOT SEED MIX, MULCHED, & DISK ANCHORED, PER THE FOLLOWING SCHEDULE:

SEED MIX 25-131: 220 LB/AC.
INFILTRATION BASIN SEED MIX 33-261: 35 LB/AC.
MULCH TYPE 3: 2 TONS/AC.

REV NO.	DATE	DESCRIPTION
1	04/01/2025	REVISION PER CITY REVIEW
2	04/24/2025	REVISION PER CITY REVIEW

DATE: 04/24/2025
DESIGN BY: MJM
DRAWN BY: MJM
CHECKED BY: CJD
DWG FILE: EROSION
FILE NO.: 22-0030.00

I hereby certify that this plan, specification, or report was prepared by me or under my direct supervision and that I am a duly Licensed Professional Engineer under the laws of the State of Minnesota.

NOT FOR CONSTRUCTION

Signed: Christopher J. Dahn
Date: Lic. No. 58628

BOGART, PEDERSON & ASSOCIATES, INC.
LAND SURVEYING
CIVIL ENGINEERING
ENVIRONMENTAL SERVICES
13079 FIRST STREET, BECKER, MN 55308-9322
TEL: 763-262-9622 FAX: 763-262-9644

CEDAR RIDGE COMMUNITY LLC
CEDAR RIDGE COMMUNITY
City of North Branch, Chisago County, MN

SOUTH LANDSCAPE PLAN

SHEET NO.
C10.2

N:\Projects Current\22-0030.02 Belzer North Branch Plat\Civil\CAD Files\NB Landscape.dwg
4/24/2025 3:15 PM

City of North Branch
Staff Report

Prepared By: Sharon Wright, Finance Director

Presenter: Sharon Wright, Finance Director

Date: 05/07/2025

Board & Commission: City Council

Subject: March 2025 Finance Update

Voting Requirements:

Bank Account Balances
3/31/2025

	EOM Balance	Interest Rate
Bremer - Checking (0753)	589,605.67	0.0%
Bremer - MM (2886)	2,440,289.60	4.3%
Associated - Checking (4089)	99,392.20	0.0%
Associated - MM (3859)	2,169,890.34	3.92%
Xpress Cash Balance	60,075.92	0.00%
Total Checking/Savings	**$ 5,359,253.73**	

Investments

US Bank	15,096,964.48	Varies
Neighborhood National CD	1,000,000.00	1.8%
Wells Fargo	1,028,010.72	Varies
Total Investments	**$ 17,124,975.20**	

Total Cash & Investments	**$ 22,484,228.93**

City of North Branch
March 2025 Update

Percent of Year 0.25%

General Fund

	3/31/2025 Actual	3/31/2024 Actual	Current vs Prior Inc/(Dec)	Projected 2025	2025 Budget
Revenues:					
Taxes	$ -	$ -	$ -	$ 6,152,620	$ 6,246,315
Licenses & Permits	77,355	62,978	14,378	375,000	347,800
Intergovernmental	240,985	128,091	112,895	1,450,000	1,570,822
Charges for Services	8,256	2,403	5,853	120,000	104,300
Fines & Forfeits	6,653	6,230	423	16,500	17,000
Other Revenue	292,106	183,313	108,793	211,000	150,400
Other Financing Sources	-	-	-	315,300	315,300
Total Revenues	$ 625,356	$ 383,014	$ 242,341	$ 8,640,420	$ 8,751,937

	3/31/2025 Actual	3/31/2024 Actual	Current vs Prior Inc/(Dec)	Projected 2025	2025 Budget
Expenditures:					
City Council	$ 274	$ 13,014	$ (12,740)	32,382	$ 32,382
City Administrator	40,539	14,037	26,503	255,000	261,168
City Clerk	9,252	40,079	(30,827)	135,000	132,406
Elections	-	4,393	(4,393)	-	-
Technology	136,903	-	136,903	485,000	481,100
Finance	97,172	56,942	40,230	405,000	404,753
City Attorney	28,550	9,233	19,317	50,000	50,000
City Engineer	5,474	5,551	(77)	40,000	40,000
Legislative	5,112	5,000	112	30,000	31,500
Planning & Zoning	2,853	24,247	(21,394)	153,239	153,239
City Facilities	39,810	45,523	(5,713)	175,000	172,189
Police	656,270	728,755	(72,485)	2,750,000	2,777,895
Fire	118,363	43,829	74,534	615,000	621,584
Building Inspection	85,975	74,685	11,290	352,000	352,169
Civil Defense	3,865	553	3,312	4,200	4,200
Animal Control	700	1,050	(350)	4,500	4,500
Street Lights	11,687	11,191	497	100,000	109,000
Public Works	258,882	373,187	(114,305)	3,100,000	3,176,340
Parks	40,646	79,765	(39,119)	379,000	382,074
Library	20,496	26,600	(6,104)	116,202	116,202
Non-Dept Exps	26,812	31,796	(4,985)	301,100	301,100
Total Expenditures	$ 1,589,634	$ 1,589,429	$ 205	$ 9,482,623	$ 9,603,801
Net Postion increase/(decrease)	$ (964,279)	$ (1,206,415)	$ 242,136	$ (842,203)	$ (851,864)
				**	

Sewer Fund (602)

	3/31/2025 Actual	3/31/2024 Actual	Current vs Prior Inc/(Dec)	Projected 2025	2025 Budget
Revenues:					
Charges for Services	$ 41,513	$ 84,607	$ (43,094)	355,000	$ 355,000
Utility Charges	413,587	234,146	179,441	1,750,000	1,803,000
Other Revenue	-	-	-	5,000	5,000
Other Financing Sources	-	-	-	-	-
Total Revenues	$ 455,100	$ 318,753	$ 136,347	$ 2,110,000	$ 2,163,000
Expenditures:					
Sanitary Sewer	$ 313,643	$ 267,267	46,377	2,069,793	$ 2,325,610
Total Expenditures	$ 313,643	$ 267,267	$ 46,377	$ 2,069,793	$ 2,325,610
Net Postion increase/(decrease)	$ 141,457	$ 51,486	$ 89,970	$ 40,207	$ (162,610)

Liquor Store Fund (609)

	3/31/2025 Actual	3/31/2024 Actual	Current vs Prior Inc/(Dec)	Projected 2025	2025 Budget
Revenues:					
Liquor Store - East	$ 612,746	$ 567,839	$ 44,907	$ 2,812,213	$ 3,017,572
Liquor Store - West	260,480	237,489	22,991	1,247,411	1,247,411
Cost of Liquor Sold - East	(427,551)	(417,720)	(9,831)	(2,038,854)	(2,258,504)
Cost of Liquor Sold - West	(175,426)	(170,614)	(4,812)	(904,373)	(848,339)
Other Revenue	900	300	600	10,800	4,200
Total Revenues	$ 271,149	$ 217,294	$ 53,855	$ 1,127,197	$ 1,162,340
Operating Expenses:					
Liquor Store - East	$ 122,267	$ 137,746	(15,478)	$ 788,874	$ 763,666
Liquor Store - West	85,383	106,094	(20,711)	235,446	393,998
Total Operating Expenses	$ 207,650	$ 243,840	$ (36,189)	$ 1,024,320	$ 1,157,664
Net Postion increase/(decrease)	$ 63,499	$ (26,546)	$ 90,045	$ 102,877	$ 4,676
Net Profit Percentage	7.26%	-3.30%		2.53%	

Stormwater Fund (612)

	3/31/2025 Actual	3/31/2024 Actual	Current vs Prior Inc/(Dec)	Projected 2025	2025 Budget
Revenues:					
Utility Charges	$ 69,014	$ 199,526	(130,513)	475,500	$ 475,500
Other Revenue	-	-	-	-	300
Other Financing Sources	-	-	-	-	-
Total Revenues	$ 69,014	$ 199,526	$ (130,513)	$ 475,500	$ 475,800
Expenditures:					
Storm Sewer	$ 51,376	$ 77,202	(25,826)	475,000	$ 563,413
Total Expenditures	$ 51,376	$ 77,202	$ (25,826)	$ 475,000	$ 563,413
Net Postion increase/(decrease)	$ 17,638	$ 122,325	$ (104,687)	$ 500	$ (87,613)

Water Fund (615)

	3/31/2025 Actual	3/31/2024 Actual	Current vs Prior Inc/(Dec)	Projected 2025	2025 Budget
Revenues:					
Charges for Services	$ 28,560	$ 190,858	$ (162,298)	342,720	$ 135,000
Water Charges	397,298	352,419	44,880	1,850,000	1,969,468
Other Revenue	7,774	12,377	(4,603)	47,500.00	50,000
Other Financing Sources	-	-	-	-	-
Total Revenues	$ 433,633	$ 555,654	$ (122,022)	$ 2,240,220	$ 2,154,468
Expenditures:					
Water	$ 303,089	$ 125,068	178,022	2,010,000	$ 2,700,682
Total Expenditures	$ 303,089	$ 125,068	$ 178,022	$ 2,010,000	$ 2,700,682
Net Postion increase/(decrease)	$ 130,543	$ 430,587	$ (300,043)	$ 230,220	$ (546,214)

Generation Fund (620)

	3/31/2025 Actual	3/31/2024 Actual	Current vs Prior Inc/(Dec)	Projected 2025	2025 Budget
Revenues:					
Charges for Services	$ -	$ 4,459	$ (4,459)	-	$ -
Utility Charges	92,057	90,000	2,057	360,000	360,000
Other Revenue	-	15,877	(15,877)	-	-
Total Revenues	$ 92,057	$ 110,336	$ (18,279)	$ 360,000	$ 360,000
Expenditures:					
Generation	$ 83,927	$ 50,502	33,425	360,000	$ 361,151
Total Expenditures	$ 83,927	$ 50,502	$ 33,425	$ 360,000	$ 361,151
Net Postion increase/(decrease)	$ 8,130	$ 59,833	$ (51,703)	$ -	$ (1,151)

Monthly Report for Liquor Store - Council Report

March 2025 Percent of Year: 0.25%

Sales by Month and Year-to-Date

Month	2025 Sales	3 Year Avg Sales	2024 Sales	2023 Sales	2022 Sales	2021 Sales
January	$ 291,317	$ 258,152	$ 249,337	$ 260,869	$ 264,251	$ 294,006
February	271,098	259,711	260,707	258,033	260,393	266,208
March	311,711	284,347	295,583	287,435	270,023	304,564
April	-	291,390	288,819	294,541	290,810	327,239
May	-	353,492	359,929	360,263	340,284	366,090
June	-	369,694	356,157	396,703	356,222	370,136
July	-	386,768	387,761	384,874	387,670	406,355
August	-	377,153	416,855	374,215	340,390	337,323
September	-	358,098	367,288	364,930	342,075	329,748
October	-	320,305	348,507	320,341	292,066	332,607
November	-	324,683	360,918	315,225	297,905	310,290
December	-	404,453	425,741	392,734	394,885	375,740
Total	$ 874,126	$ 3,988,246	$ 4,117,602	$ 4,010,162	$ 3,836,975	4,020,305

YTD Sales compared to 3 Year Avg	$ 71,915	YTD Sales compared to 3 Year Avg	108.96%
YTD Sales compared to 2024 Sales	$ 68,498	YTD Sales compared to 2024 Sales	108.50%

Expenses by Month and Year-to-Date

Month	2025 Expenses	3 Year Avg Expenses	2024 Expenses	2023 Expenses	2022 Expenses	2021 Expenses
January	255,206	246,181	175,638	255,794	307,113	293,718
February	261,974	279,673	331,652	272,608	234,760	282,744
March	273,230	334,265	324,884	326,195	351,716	382,787
April	-	303,311	287,748	309,284	312,900	317,321
May	-	358,198	389,397	327,960	357,236	325,980
June	-	327,872	275,479	306,429	401,707	361,741
July	-	353,050	378,477	364,310	316,364	365,403
August	-	354,394	365,253	364,211	333,718	338,110
September	-	327,614	346,710	330,720	305,413	329,361
October	-	271,933	234,669	306,036	275,092	279,299
November	-	366,419	378,443	378,576	342,238	279,323
December	-	440,927	534,146	487,602	301,033	392,250
Total	$ 790,410	$ 3,963,836	$ 4,022,495	$ 4,029,724	$ 3,839,288	3,948,037

YTD Expenses compared to 3 Year Avg	$ (69,709)	YTD Expenses compared to 3 Year Avg	91.90%
YTD Expenses compared to 2024 Exps	$ (41,763)	YTD Expenses compared to 2024 Exps	94.98%

	2025	3 Year Avg	2024	2023	2022	2021
YTD Net Income (Before Transfers)	$ 163,715	$ 115,929	$ 175,107	$ 80,438	$ 92,243	$ 172,269
Net Income Percentage	18.73%	2.89%	4.25%	2.01%	2.40%	4.28%

Gross Margin

NOTE: Gross Margin measures the revenue generated less the cost of the items sold

Monthly Report for Liquor Store - Council Report

March 2025 Percent of Year: 0.25%

	2025 Annual Budget	Actual 2025 YTD	Actual East	Actual West
Sales	$ 4,259,583	$ 873,226	$ 612,746	$ 260,480
Cost of Sales	3,106,843	602,977	427,551	175,426
Gross Margin	$ 1,152,740	$ 270,249	$ 185,195	$ 85,054
	27.1%	30.9%	30.2%	32.7%

	2025 Annual Budget	Actual 2025 YTD	East Actual	West Actual
Gross Margin by Category - Budget vs Actual				
Liquor	$ 418,468	$ 68,834	$ 45,501	$ 23,333
Beer	556,299	153,319	109,380	43,939
Wine	123,638	30,355	16,900	13,455
Non-Alcoholic	37,335	9,813	8,134	1,679
THC	-	7,928	5,280	2,647
Other	-	-	-	-
	$ 1,135,740	$ 270,249	$ 185,195	$ 85,054

2025 Sales By Category

Month	Total	Liquor	Beer	Wine	THC	Non-Alcoholic
January	291,017	108,447	134,588	29,854	8,527	9,601
February	270,498	102,744	122,439	29,206	7,886	8,224
March	311,711	115,750	145,909	32,016	8,543	9,492
April	-					
May	-					
June	-					
July	-					
August	-					
September	-					
October	-					
November	-					
December	-					
Total	873,226	326,941	402,937	91,075	24,956	27,317

2025 Cost of Goods Sold By Category

Month	Total	Liquor	Beer	Wine	THC	Non-Alcoholic
January	189,931	98,706	65,812	14,628	6,730	4,055
February	197,271	70,807	92,673	22,267	5,747	5,776
March	215,775	88,594	91,132	23,825	4,551	7,672
April	-					
May	-					
June	-					
July	-					
August	-					
September	-					
October	-					
November	-					
December	-					
Total	602,977	258,107	249,617	60,720	17,028	17,504

Monthly Report for Liquor Store - Council Report

March 2025 Percent of Year: 0.25%

2024 Sales to Cost of Goods Sold Comparison

2024 Sales By Category

Month	Total	Liquor	Beer	Wine	THC	Non-Alcoholic
January	249,162	96,471	116,344	27,809	-	8,539
February	260,303	99,256	121,438	30,641	-	8,968
March	295,369	111,612	140,575	33,741	-	9,440
April	287,961	105,719	143,013	28,776	-	10,454
May	359,716	128,807	184,939	32,723	-	13,247
June	356,247	127,840	182,522	32,263	-	13,622
July	387,751	132,338	208,092	31,690	-	15,631
August	416,555	142,184	221,495	36,758	909	15,209
September	367,288	127,223	188,095	34,381	4,368	13,221
October	348,482	128,231	167,580	35,655	5,341	11,675
November	360,318	133,546	163,115	47,104	5,691	10,861
December	421,538	166,694	178,546	56,103	8,411	11,784
Total	4,110,689	1,499,920	2,015,754	427,645	24,720	142,651

2024 Cost of Goods Sold By Category

Month	Total	Liquor	Beer	Wine	THC	Non-Alcoholic
January	98,488	54,374	39,284	3,003	-	1,826
February	257,805	102,021	116,719	29,676	-	9,389
March	232,041	99,025	98,637	25,000	-	9,379
April	222,083	77,625	113,174	22,005	-	9,280
May	310,782	105,537	152,552	38,043	-	14,650
June	206,602	69,342	112,660	11,939	-	12,660
July	302,657	87,152	175,558	28,314	-	11,633
August	278,520	93,741	156,504	18,515	-	9,760
September	280,341	100,389	141,435	21,712	6,959	9,845
October	177,997	46,801	103,408	18,209	3,421	6,158
November	298,206	94,454	151,680	38,439	3,429	10,205
December	311,851	92,170	183,084	31,170	(340)	5,767
Total	2,977,372	1,022,631	1,544,694	286,026	13,470	110,552

City of North Branch
Staff Report

Prepared By: Shawn Williams, Public Works Director

Presenter: Shawn Williams, Public Works Director

Date: 05/08/2025

Board & Commission: City Council

Subject: Street Sweeping, Leaf Pick Up, and Compost Site Update

---

It's not just about tidy streets: street sweeping and leaf pick-up keep our rivers and lakes clean!

Our street sweeping and leaf pick-up programs are vital for maintaining the beauty of our streets and, more importantly, protecting our waterways. These services effectively capture leaves, dirt, trash, and other debris, significantly reducing pollution in the Sunrise River and other waters, including the St. Croix River, where our storm water ultimately flows.

North Branch has a long-standing commitment to clean streets, starting with the purchase of our first street sweeper in 1976. Our city-wide leaf pick-up program, initiated in 1994, has become increasingly popular each year. We often hear positive feedback from residents about these programs, like "the leaf pickup service is wonderful!", "The streets are always clean in North Branch,".

We've also received valuable support through two grants from Chisago County Soil and Water for enhanced street sweeping, totaling $26,000 over three years, which will continue until 2026.

It's important to remember that when it rains, storm water runoff collects pollutants as it travels over impervious surfaces into our storm drains and ultimately into our lakes, rivers, and wetlands. Leaves are a major contributor to this pollution, with studies indicating that nearly 60% of the annual phosphorus load in urban storm water comes from fallen leaves on streets and sidewalks. Our leaf pick-up efforts are crucial in preventing this pollution. This spring alone, our sweeping program has collected over 500 cubic yards of sediment, and we have picked up over 1,200 cubic yards of leaves, preventing them from entering our storm sewer system. These services are essential for meeting the requirements of the City's MS4 Storm Water Permit, which is mandatory for cities with a population over 5,000., and regulated by the MPCA.

On another note, our compost site is operating smoothly. The current hours are Wednesdays from 4:00 p.m. to 8:00 p.m., one item to note on the Wednesday hours is that we only see 1-2 people after 7:00 p.m., so the closing may change to 7:00 p.m., Saturdays from 9:00 a.m. to 12:00 p.m., and Sundays from 1:00 p.m. to 4:00 p.m. Since its opening on April 26th, we've had 406 resident visits, with overwhelmingly positive feedback from users. Many have expressed that this is a service the city should have offered years ago.

Thank you for your continued support in keeping North Branch a clean and environmentally responsible community.

Voting Requirements:

Voting Options	**Simple Majority**

City of North Branch
Staff Report

Prepared By: Shawn Williams, Public Works Director

Presenter: Shawn Williams, Public Works Director

Date: 05/08/2025

Board & Commission: City Council

Subject: Consider Approval of City Wide Traffic Speed Study

Over the past several years, the city has received numerous requests for speed reductions on various streets, a trend that has increased with our recent growth. The most recent request concerns Flink Avenue, where there is a proposal to lower the speed limit from 55 mph to 45 mph. We have also had previous requests for Maple Street and Elm Street to be reduced to 20 mph from the current statutory urban speed limit of 30 mph. Additionally, we are currently getting requests for Hemingway Avenue, south of 372nd Street, and many other similar concerns exist throughout the city.

To proactively address these requests and establish appropriate speed limits based on safety, current traffic volumes (ADT counts), and engineering best practices, I contacted our engineering firm, WSB, to obtain a quote for a city-wide traffic speed study. I am pleased to report that we have received a quote for $15,846.00, which, through negotiation, includes all optional tasks. If approved, this cost would be covered by our 2025 street improvement fund.

This speed study will be a valuable resource for the city, and it will also incorporate a public engagement component, allowing residents to provide feedback on specific roads and related issues.

For your review, I have attached the detailed quote from WSB. I respectfully request that the City Council consider a motion for the approval of this traffic speed study.

Voting Requirements:

Voting Options **Simple Majority**

Proposal to Provide Traffic Engineering Services

To: Justin Messner, PE, City Engineer, City of North Branch

From: Sean Delmore, PE, PTOE, Director of Traffic Engineering
Mallori Fitzpatrick, PE, PTOE, Project Manager

Date: April 11, 2025

Re: Scope and Cost Estimate for a Citywide Speed Limit Policy

---

BACKGROUND

Based on State Statutes, Cities can set speed limits with additional study and analysis on selected local City streets (not Township Roads, County Roads or Trunk Highways). In order for the city to adopt the speed limits they must develop procedures to set speed limits based on safety, engineering, and traffic analysis. WSB presents this proposal to prepare a citywide speed limit policy for the City of North Branch.

SCOPE

Task 1 – Project Management:

This task includes planning and coordination of all work tasks, establishment and monitoring of budgets, and correspondence with the City of North Branch. The project manager (Mallori) will provide technical direction on all aspects of the project review, all work products, and keep the City informed on the project progress. The project manager will serve a primary role in the analysis and preparation of the Speed Limit Policy.

Task 2 – Data Collection:

Available data will be collected from the City of North Branch, Chisago County, MnDOT and other impacted agencies. Data will include but not limited to:

- Existing and proposed roadway Jurisdiction and Functional Classification.
- Existing speed limits on all roadways within the City.
- Existing Average Daily Traffic volumes available on area roadways.
- City and County Comprehensive and Transportation Plans.

Field site visits will be conducted as needed to document any information on roadways not available or provided.

Task 3 – Background Documentation:

Guidance from Minnesota Statutes, Minnesota Department of Transportation (MnDOT) policies and guidelines and Minnesota Manual on Uniform Traffic Control Devices (MnMUTCD) will be reviewed and discussed. This task will document the cities opportunities and responsibilities for setting specific speeds (i.e., 20mph, 25mph, 30mph, etc.).

Task 4 – Collect and Review Public Feedback:

WSB will collect existing feedback the city has from the public on specific roadways with concerns. Issues will be reviewed and compared with findings of Tasks 5-6 to develop recommendations.

Task 5 – Review Roadway Type and Speed Limit Recommendations:

WSB will identify each roadway type based on functional classification and context (rural through urban). Based on current Minnesota State rules and roadway classification/context, speed limit

701 XENIA AVENUE S | SUITE 300 | MINNEAPOLIS, MN | 55416 | 763.541.4800 | WSBENG.COM

recommendations will be prepared and discussed with the City. The plan will include preparation of a summary technical memorandum with maps showing the existing conditions, roadway types, and any proposed speed limit changes. The plan will also identify the next steps for when and where speed limit signs should be posted, if changes are proposed.

Task 6 – Speed Limit Policy:
A Speed Limit Policy will be prepared documenting the process and requirements for establishing and or modifying speed limits within the city. Information from Tasks 2 through 5 will be provided within the Speed Limit Policy Document.

Task 7 – Agency Coordination / Meetings:
WSB will hold project meetings with the City and other stakeholders throughout the preparation of the Speed Limit Policy through phone and email correspondence to ensure the final product meets the intended need. The meetings will include one kick-off meeting with City staff at the beginning of the project, one meeting with City staff and other agencies if needed, to review the preliminary findings and one City Council meeting to present the results. If additional meetings are required, WSB will charge the time at our standard hourly rates.

Optional Task – Perform Speed Study:
WSB will perform a speed study using tube counters or radar on a requested roadway based on feedback from the public and as directed by the city. WSB will collect the most recent three years of crash data and develop a crash rate for the corridor. Data collected will be utilized in recommendations to any speed limit changes.

Optional Task – Public Engagement:
WSB will create a web based interactive map that the public can provide comments on specific issues and concerns throughout the city. A summary will be prepared documenting the comments received. A link will be provided by WSB that the city can use on their website or other communication with the public.

SCHEDULE AND COST

Coordination with the City will begin promptly after notice to proceed (NTP). The data collection/field review can take place in late April or early May. Draft study findings will be available for discussion with the City eight weeks after data analysis is complete.

WSB will bill for the actual hours worked at each employee classification times the current WSB hourly rates for that employee classification up to the maximum of **$15,846.00** for Tasks 1-7. No work in excess of the $15,846.00 will be completed without prior written approval from the City of North Branch. Each Speed Study (Optional Task) may be completed for an additional $2,438.00. The Public Engagement (Optional Task) may be completed for an additional $2,398.00.

Thank you for the opportunity to propose on this project. Please contact me at 612-400-5384 if you have any questions regarding the content of this proposal.

Sincerely,

Mallori Fitzpatrick
Project Manager

City of North Branch
Staff Report

Prepared By: Kevin Schieber, Mayor

Presenter: Kevin Schieber, Mayor

Date: 05/07/2025

Board & Commission: City Council

Subject: Consider solutions to ongoing problems with our city website and meeting video recording systems

---

Background: I have received several complaints about our video system that live streams and records our various city meetings. I have received several complaints that the live streams stop or show an error message part way through the meetings. We of course have experienced, in room, audio feedback from several meetings as well. This has been an ongoing and worsening problem for more than two years, and the poor operations of our meeting systems has become unacceptable. City Administrator Hill made a comment (in one of our meetings) that all the meeting software companies are bad, but we never had these types of problems so consistently until the past year or so.

The city website is another poor layout. Residents cannot easily find the most common information. Some of this is due to not having a city clerk (and having our info updated in a timely manner), but this, too, has gone on for several years. We need a website that is user friendly, and one that can more easily be updated. Having updated information listed in a timely manner should be the desired expectation, not the rare exception. Our website is lacking effectiveness in almost every conceivable manner. In my opinion, we need a major overhaul.

Recommendation: I am looking for discussion and consensus from the council on which actions we think should be taken in order to fix our existing systems, or replace them entirely. In our modern society; websites, video recording systems and social media are often the first impression, or most frequent type of city interaction from our residents and community members when they are seeking information. Our residents, employees and council deserve a working system, and these types of communications need to be taken seriously. This is one of the most basic functions of our city government, and at this time, we are too often failing our community. We need to do better.

Voting Requirements:

Voting Options **Simple Majority**