# NORTH BRANCH
# —Minnesota—

Kevin Schieber
Mayor

Robert Canada
Councilmember/Acting Mayor

Patrick Meacham
Councilmember

Jeff Goulet
Councilmember

Jim Ibinger
Councilmember

**CITY COUNCIL**
**REGULAR AGENDA**
**TUESDAY, JUNE 10, 2025 @ 7:00 PM**
**CITY HALL, 6408 ELM STREET, NORTH BRANCH, MN 55056**

1. CALL TO ORDER

2. PLEDGE OF ALLEGIANCE

3. ROLL CALL

4. AGENDA APPROVAL
   a. Approve Agenda — ACTION

5. PRESENTATION & PROCLAMATION
   a. 2024 Audit Presentation and Approval of the 2024 Financial Statements by City Council — ACTION

6. PUBLIC COMMENT
   *Provides an opportunity for the public to address the Council on items that are not on the Agenda. Please raise your hand to be recognized. Please state your name and address for the record. This section is for the express purpose of addressing concerns of City services and operations. It shall not be used to clarify individual's views for political purposes.*

7. CONSENT AGENDA
   *All matters listed under Consent Agenda are considered routine and/or non-controversial and will be approved by one motion. There will be no separate discussion of these items unless a Councilmember or citizen so requests, in which case the item will be removed from the Consent Agenda and considered in its normal sequence on the Agenda.*
   a. Claims — ACTION
   b. Minutes - Special Meeting, May 20, 2025, 6:00 PM — ACTION
   c. Minutes - Joint session with City Council and Planning Commission, May 27, 2025, 6:00 PM — ACTION
   d. Minutes - Regular Meeting - May 27, 2025, 7:00 PM — ACTION
   e. Approval of LG214 & LG215 gambling permits for American Legion Post 85 — ACTION

| | | |
|---|---|---|
| f. | Approval of 30 day Transient Merchant License Group Sale for Southwestern Advantage | ACTION |
| g. | Receive May 2025 legal report from City Attorney | INFO |
| h. | Approval of Resolution R-196-2025 approving the Preserve at Spring Hill 2nd Addition Development Agreement | ACTION |
| i. | Accept the Resignation of City Staff Accountant, Nicholas Solberg, and Authorize Job Posting and Hiring Process | ACTION |

8. PUBLIC HEARINGS

9. STAFF REPORTS

| | | |
|---|---|---|
| a. | Consider Approval of Ordinance 394-25 to amend City Code Section 66-6 to allow Single Family Homes in the R3 Zoning District | ACTION |
| b. | Consider Resolution R-198-2025 to approve the Cedar Ridge Preliminary Plat | ACTION |
| c. | Summary of Conclusions of Evaluation of Performance of City Administrator. | INFO |

10. MAYOR/CITY COUNCIL

| | | |
|---|---|---|
| a. | Minimum Lot Sizes and Setback Requirements for Residential Lots | ACTION |

11. ADJOURNMENT

---

*Since we do not have time to discuss every point presented, it may seem that decisions are preconceived. However, background information is provided to the City Council on each Agenda item in advance from Staff and appointed Commissions; and decisions are based on this information and past experiences. In addition some items may also have been discussed preliminarily at Council Work Sessions. If you are aware of information that has not been discussed, please raise your hand to be recognized. Comments that are pertinent are appreciated. Items requiring excessive time may be continued to another meeting.*

---

**City of North Branch**
**Staff Report**

**Prepared By: Sharon Wright, Finance Director**

**Presenter:**

**Date: 06/04/2025**

**Board & Commission: City Council**

**Subject: 2024 Audit Presentation and Approval of the 2024 Financial Statements by City Council**

---

First, Justin Nilson, CPA and Kelsey Larson, CPA; partner and manager respectively, from Abdo are presenting the results of the 2024 audit.

Second, the City Council will approve, by a majority vote, to accept the audit of the 2024 City of North Branch Financial Statements.

**Voting Requirements:**

**Motion and second to approve the Financial Report as presented by Abdo**

Lighting the path forward

# City of North Branch

## 2024 Financial Statement Audit

# Introduction

- Audit Results
- General Fund
- Other Governmental Funds
- Enterprise Funds
- Key Performance Indicators

# Audit Results

**Auditor's Opinion**

Unmodified opinion under GAAP

**Minnesota Legal Compliance**

One instance of noncompliance

# Audit Results
# 2024 Audit Findings

- Preparation of Financial Statements
  - Internal Control Finding
- Limited Segregation of Duties
  - Internal Control Finding
- I-9 Document Retention
  - Internal Control Finding
- Cash Reconciliations
  - Internal Control Finding
- Support for Credit Card Transactions
  - Legal Compliance Finding

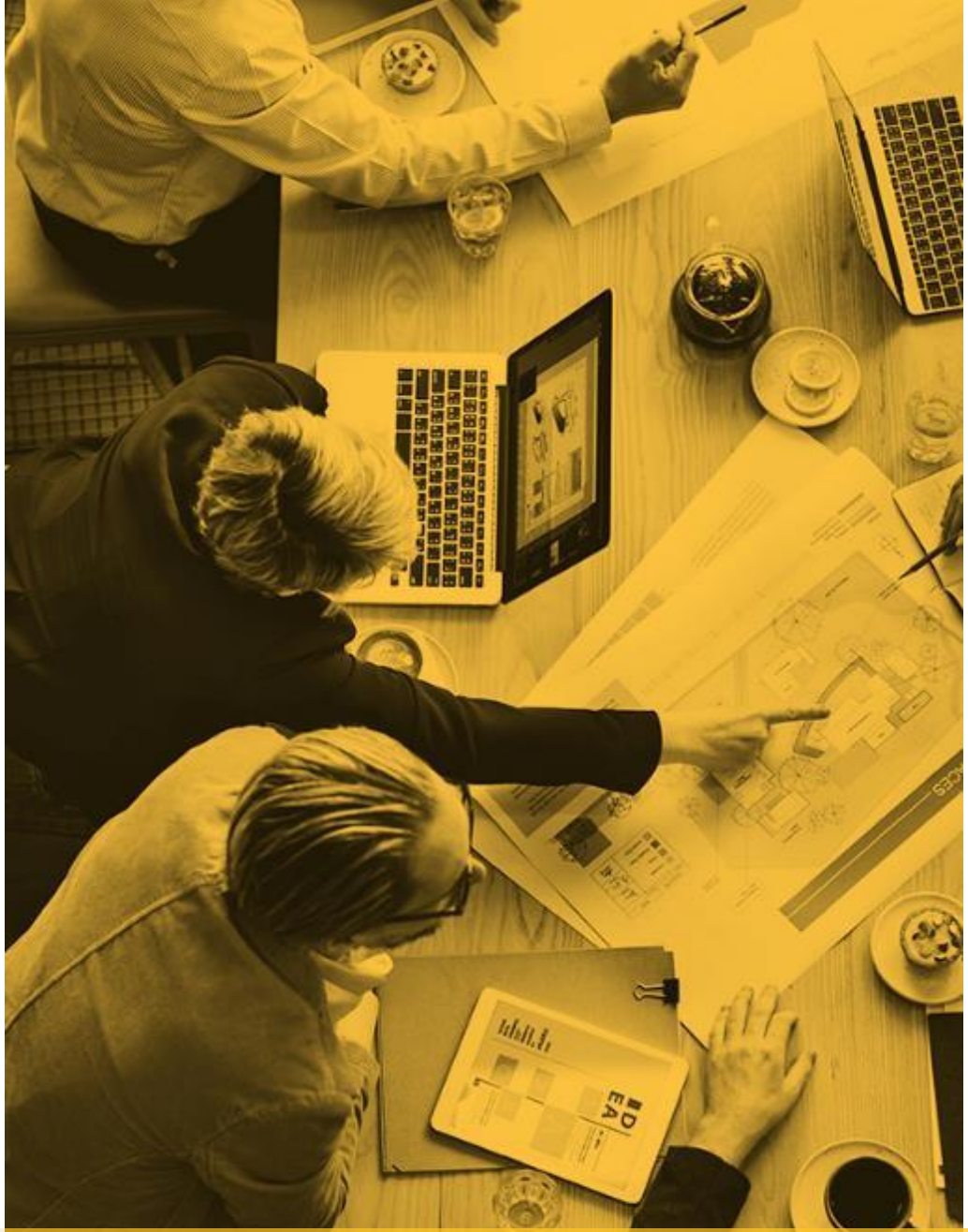

# Results from Prior Year Audit Findings

- Audit Adjustments and Restatement
  - Update: No adjustments similar to prior year exist and the finding was resolved for 2024
- Balance Sheet Reconciliations
  - Update: Finding was related to PUC merger. Finding was resolved for 2024.
- IT Control Environment
  - Update: Updated IT controls resolved the finding in 2024.
- Unclaimed Property
  - Update: Unclaimed property over 3 years was turned over to the State. Finding resolved.
- Collateral Coverage
  - Update: Collateral coverage was sufficient at 12/31/2024. Finding resolved.

# Auditor Recommendations

## Escrows with Deficit Balances

- Monitor balances regularly to ensure the City receives deposits in advance of developer activity.  This may include reviewing the internal processes and/or procedures.
- We recommend creating a written policy addressing the escrow process.

# General Fund Reserves

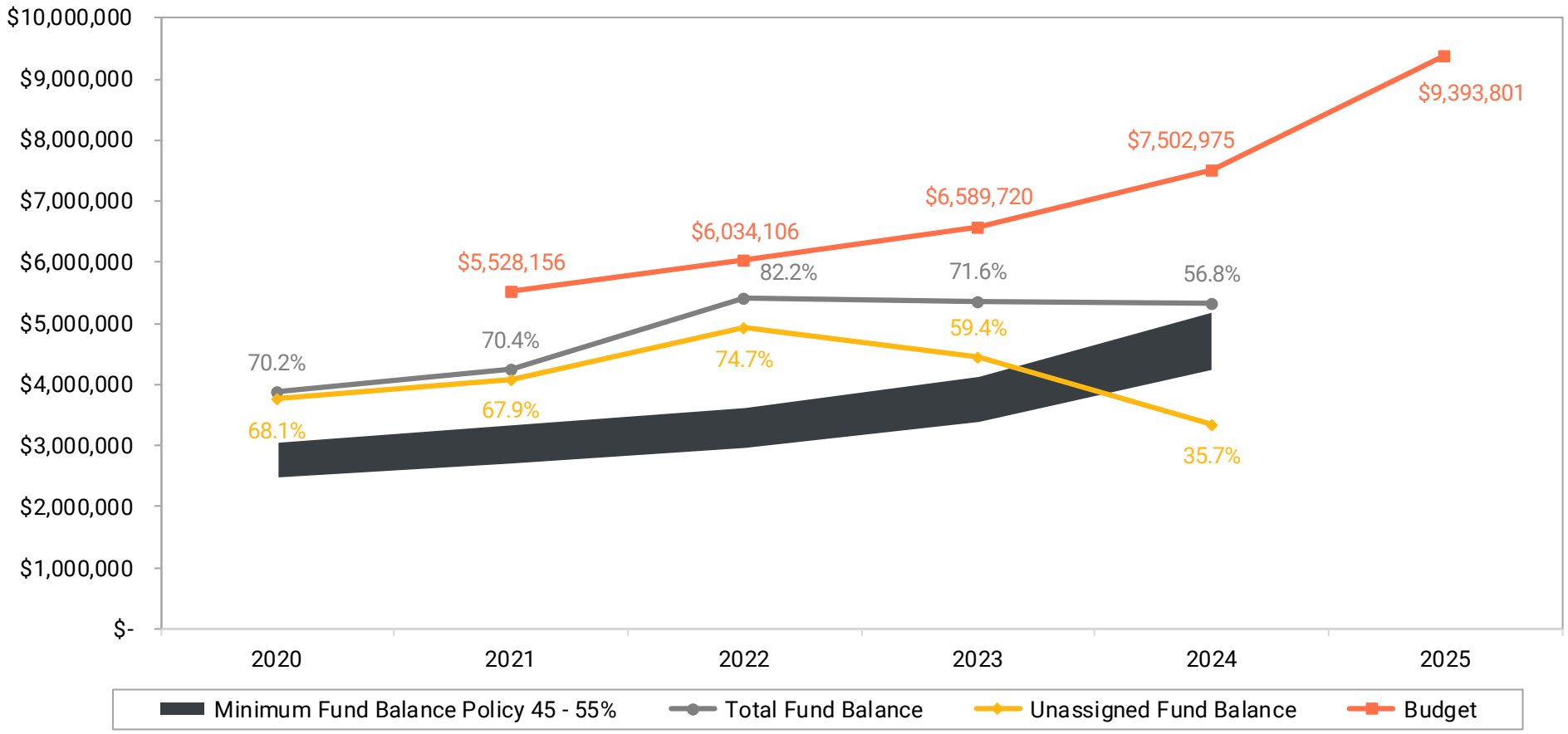

# General Fund Budget to Actual

| | Budgeted Amounts | | Actual | Variance with |
|---|---|---|---|---|
| | Original | Final | Amounts | Final Budget |
| Revenues | $ 7,571,902 | $ 7,571,902 | $ 7,995,718 | $ 423,816 |
| Expenditures | 7,502,975 | 7,502,975 | 7,528,132 | (25,157) |
| Excess (Deficiency) of Revenues Over (Under) Expenditures | 68,927 | 68,927 | 467,586 | 398,659 |
| Other Financing Sources (Uses) | | | | |
| Transfers in | 121,800 | 121,800 | 209,241 | (87,441) |
| Transfers out | (185,000) | (560,000) | (713,209) | 153,209 |
| Total Other Financing Sources (Uses) | (63,200) | (438,200) | (503,968) | 65,768 |
| Net Change in Fund Balances | 5,727 | (369,273) | (36,382) | 332,891 |
| Fund Balances, January 1 | 5,369,812 | 5,369,812 | 5,369,812 | - |
| Fund Balances, December 31 | $ 5,375,539 | $ 5,000,539 | $ 5,333,430 | $ 332,891 |

# General Fund Revenues, Expenditures, and Transfers Out by Type

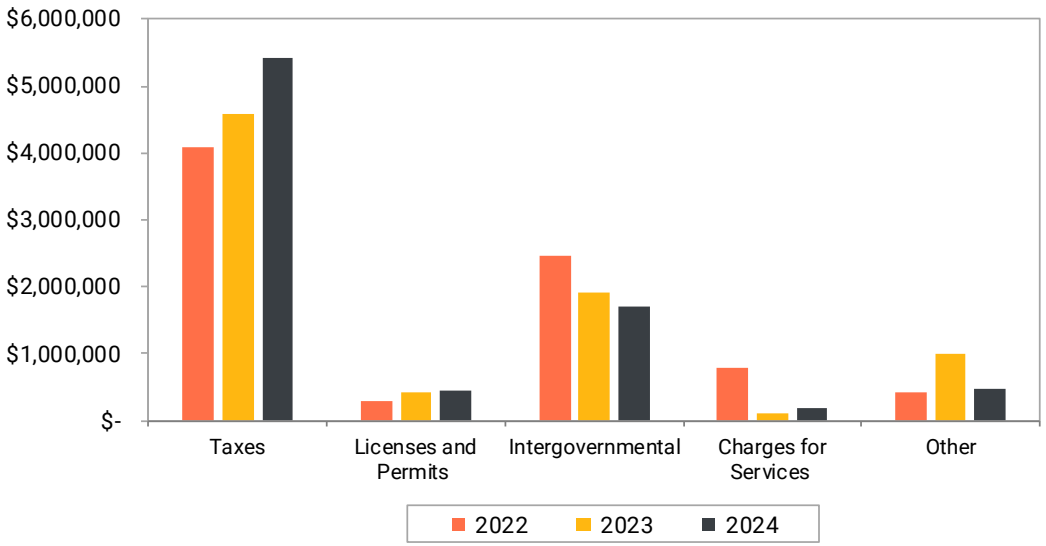


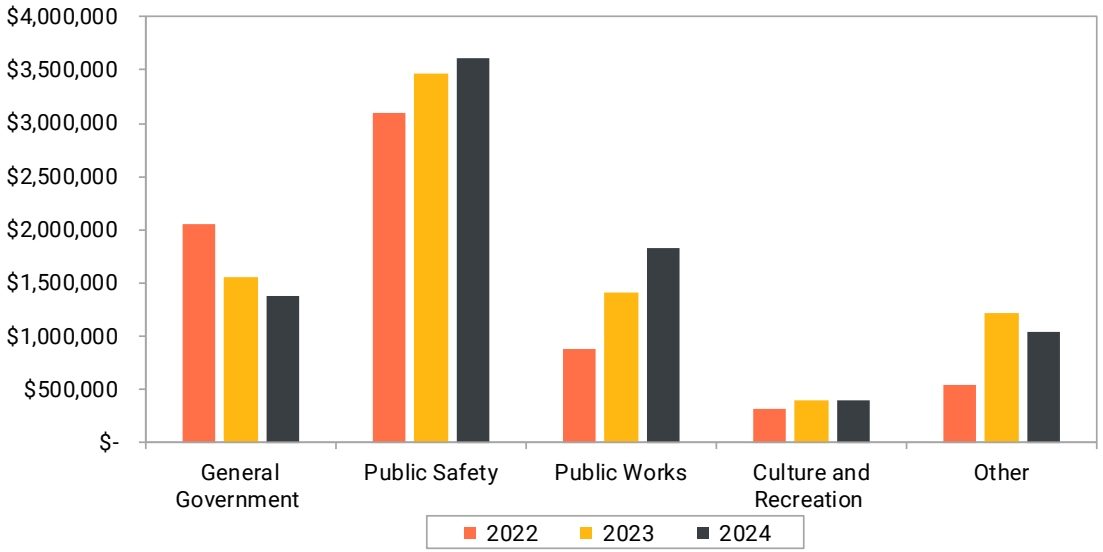

# Special Revenue Fund Balances

| Fund | Fund Balances December 31, 2023 | Fund Balances December 31, 2024 | Increase (Decrease) |
|---|---|---|---|
| Nonmajor | | | |
| EDA | $ (50,526) | $ 215,421 | $ 265,947 |
| Fire Department Equipment Donation | 157,532 | 193,228 | 35,696 |
| Tax Abatement | 21,573 | - | (21,573) |
| Revolving Loan | 327,500 | 340,836 | 13,336 |
| Cable Franchise | 79,389 | 102,462 | 23,073 |
| Ecumen TIF District | 22,389 | 30,748 | 8,359 |
| Flashing by Design TIF | (151,642) | (134,571) | 17,071 |
| Housing Support | 52,951 | 54,682 | 1,731 |
| Willow Grove | 9,673 | 11,811 | 2,138 |
| Everlong TIF | 45,937 | 72,670 | 26,733 |
| Total Special Revenue Funds | $ 514,776 | $ 887,287 | $ 372,511 |

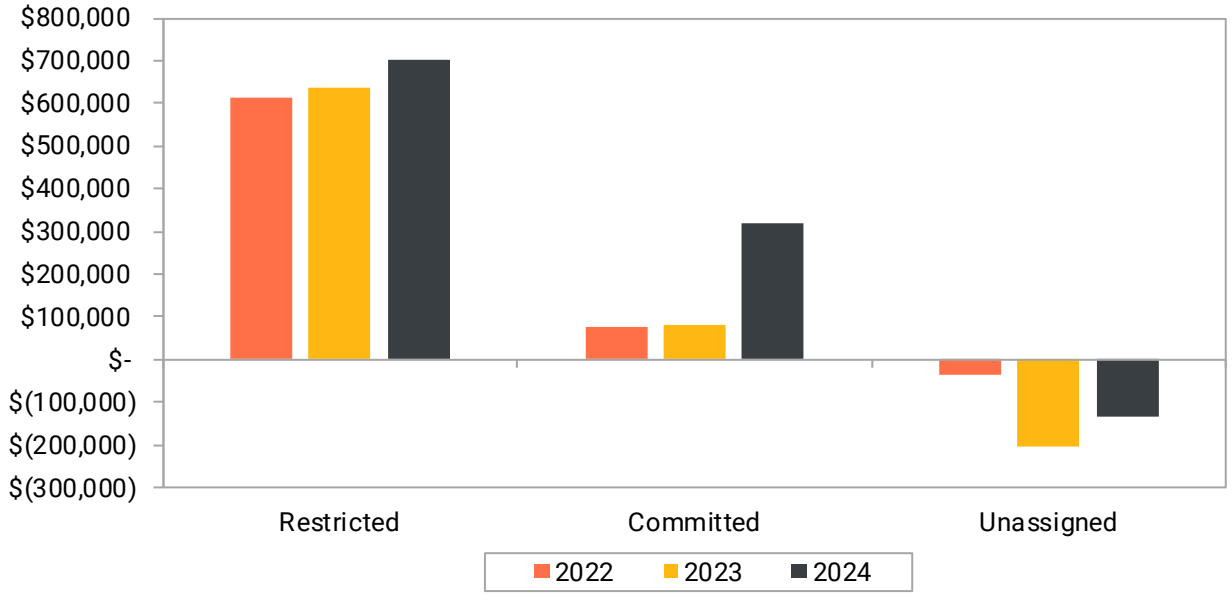


*Nonspendable fund balance not shown in chart due to insignificant balance

# Capital Project Fund Balances

| Fund | Fund Balances December 31, 2023 | Fund Balances December 31, 2024 | Increase (Decrease) |
|---|---|---|---|
| Fixed Wireless Capital | $ (17,032) | $ - | $ 17,032 |
| Revolving Capital | (30,979) | 481,776 | 512,755 |
| Park Improvements | 40,077 | 105,212 | 65,135 |
| Equipment Revolving | 2,069 | - | (2,069) |
| Road Improvements | (134,159) | (125,939) | 8,220 |
| Road Maintenance Fee | 22,008 | 277,517 | 255,509 |
| Library/Community Center | 172,194 | 177,822 | 5,628 |
| Industrial Park IV | 8,002,595 | 8,328,730 | 326,135 |
| Palletman | (8,007) | - | 8,007 |
| Recreation Center | 435,713 | 214,114 | (221,599) |
| Housing Project | 8,313 | - | (8,313) |
| 399th Improvement Project | 332,714 | - | (332,714) |
| Equipment Replacement | 111,046 | - | (111,046) |
| Total | $ 8,936,552 | $ 9,459,232 | $ 522,680 |

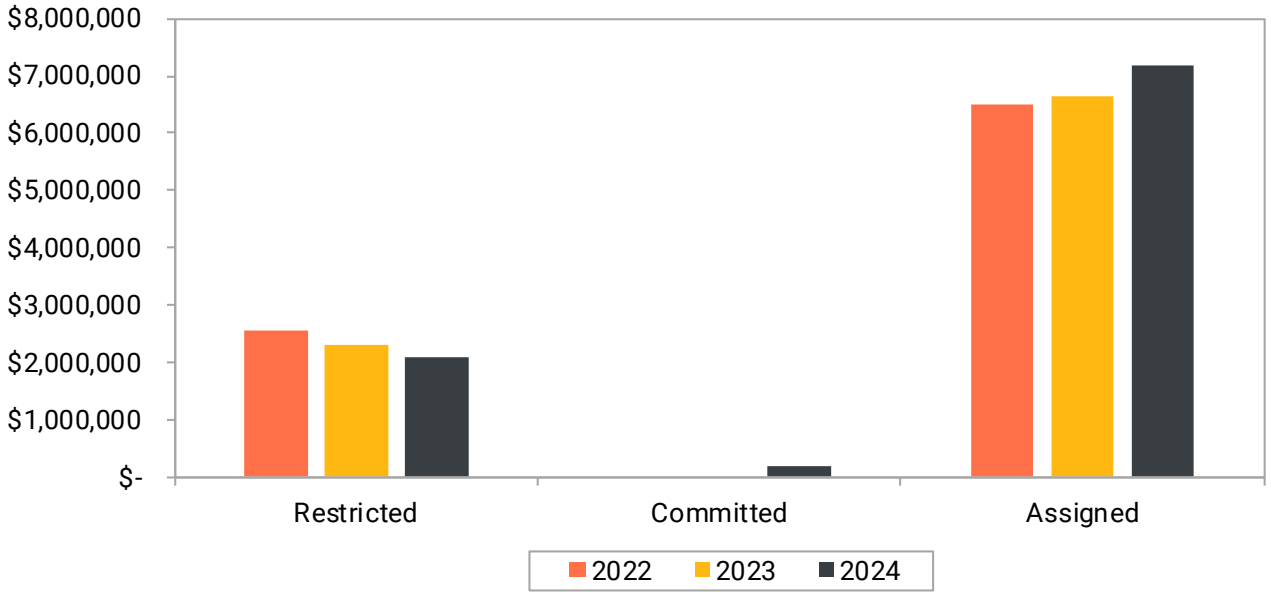

# Debt Service

| Debt Description | Total Cash | Total Assets | Bonds Outstanding | Year of Maturity |
|---|---|---|---|---|
| General Obligation Bonds | | | | |
| 2013 G.O. Refunding Bonds | $ 590,974 | $ 598,677 | $ 100,000 | 02/01/2025 |
| Street Reconstruction Bonds of 2009A Refunded by 2020A | 30,656 | 32,356 | 205,000 | 02/01/2029 |
| 2017C Tax Increment Refunding Bonds | 273,487 | 273,487 | 2,895,000 | 02/01/2021 |
| 2009 EDA Lease Revenue Bonds | 534,326 | 537,482 | 2,040,000 | 04/01/2031 |
| 2017B Tax Increment Refunding Bonds | 444,797 | 445,132 | 345,000 | 02/01/2027 |
| 2008A G.O. Bonds Refunded by 2020A | 570,622 | 959,182 | 569,000 | 02/01/2029 |
| 2022A Certificate of Indebtedness | 138,329 | 143,467 | 870,000 | 02/01/2030 |
| Total Debt Service funds | $ 2,583,191 | $ 2,989,783 | $ 7,024,000 | |
| Total Remaining Interest Payments | | | $ 375,857 | |

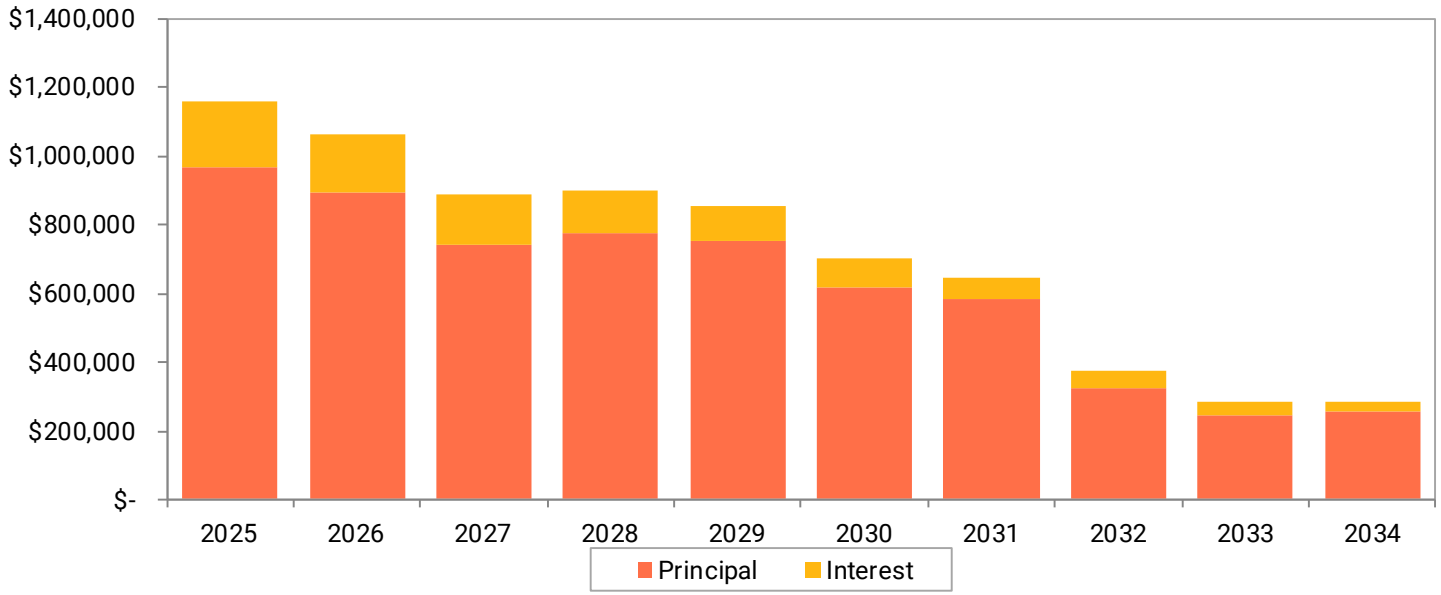

# Sewer Fund

*Cash Flows from Operations and Cash Balances*

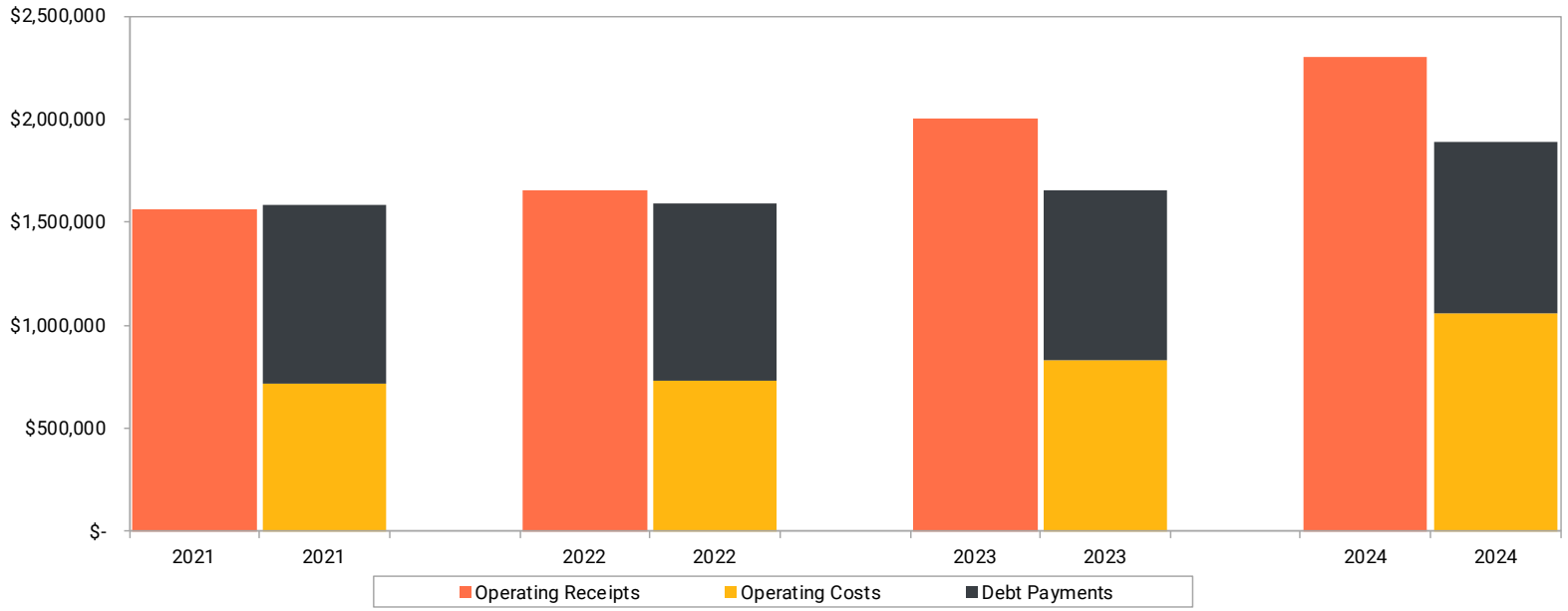


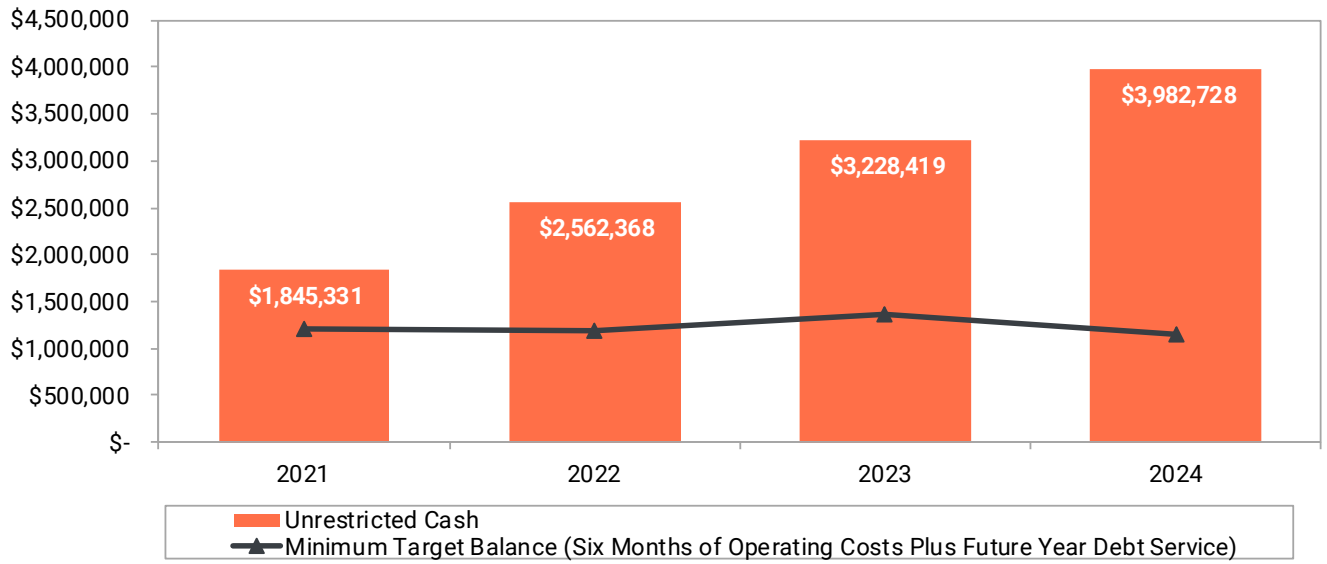

# Storm Sewer Fund

*Cash Flows from Operations and Cash Balances*

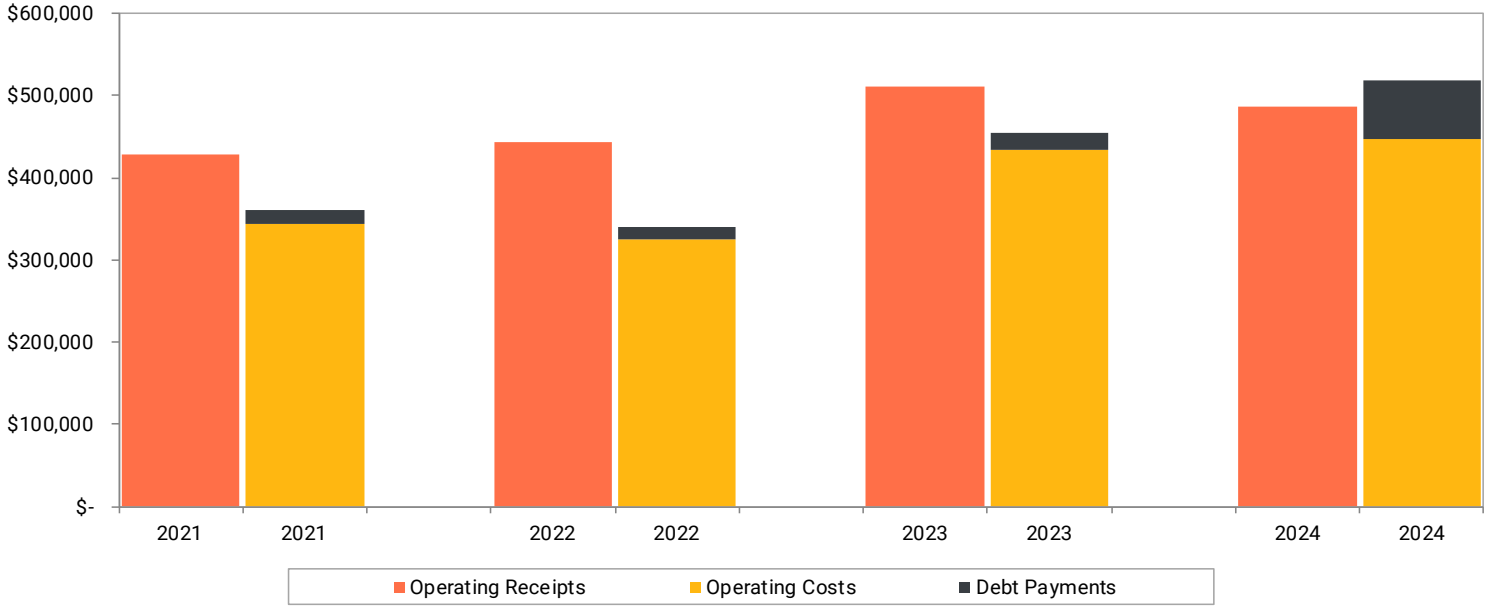


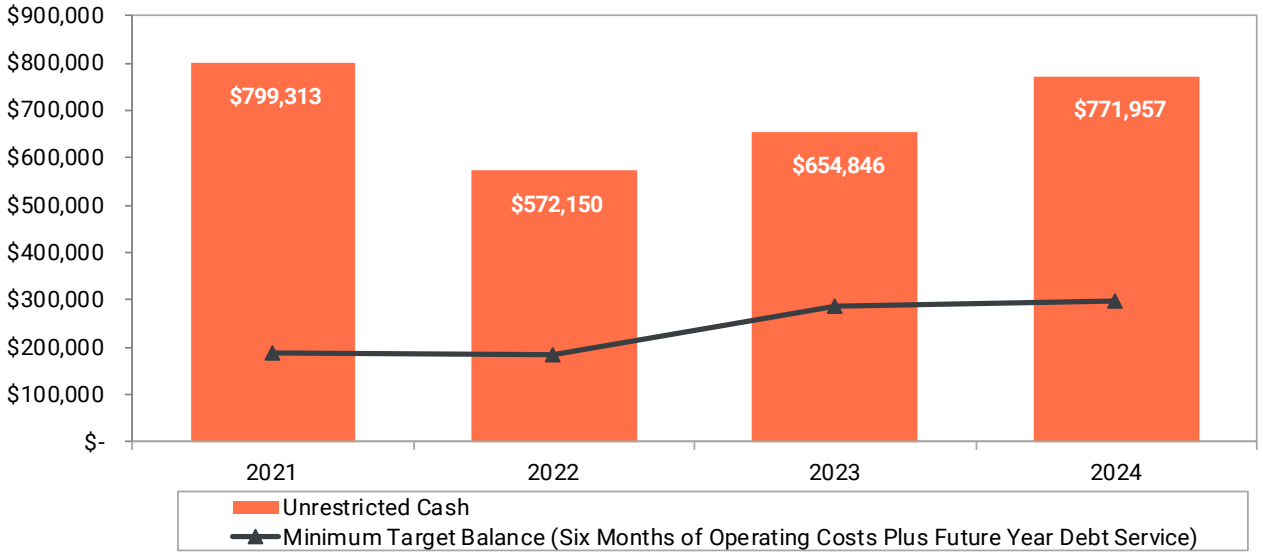

# Water Fund

*Cash Flows from Operations and Cash Balances*

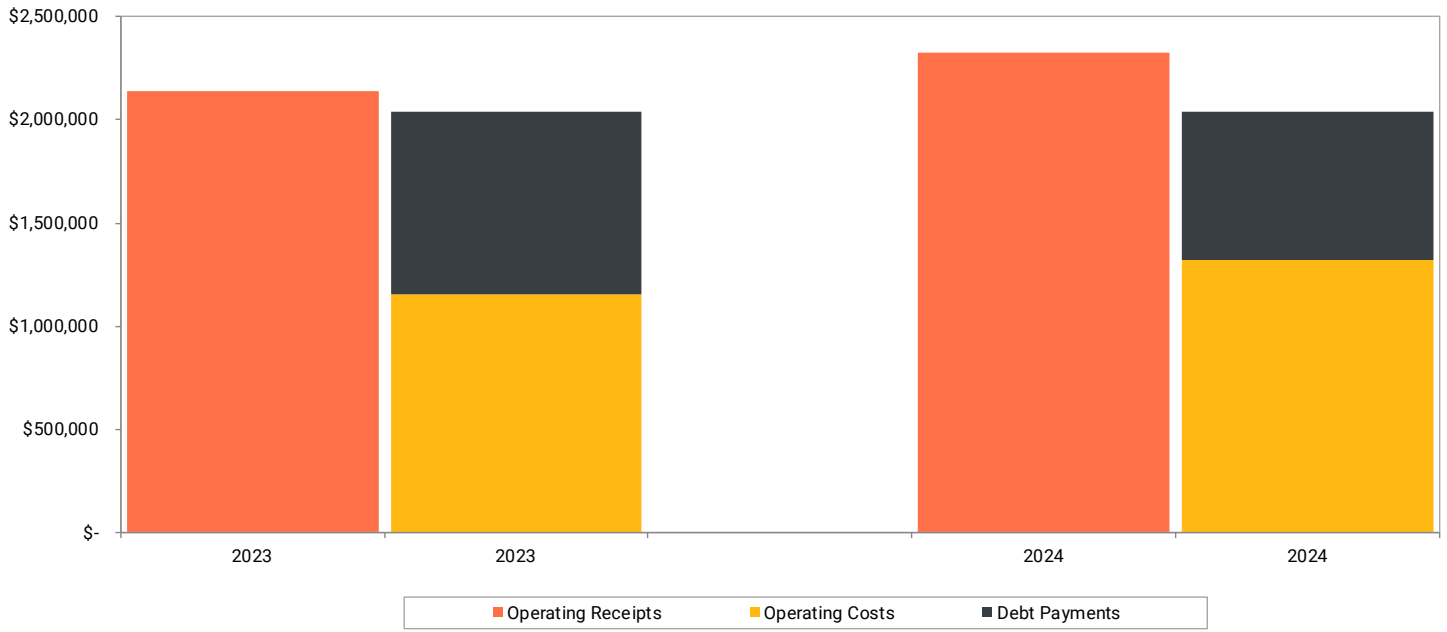


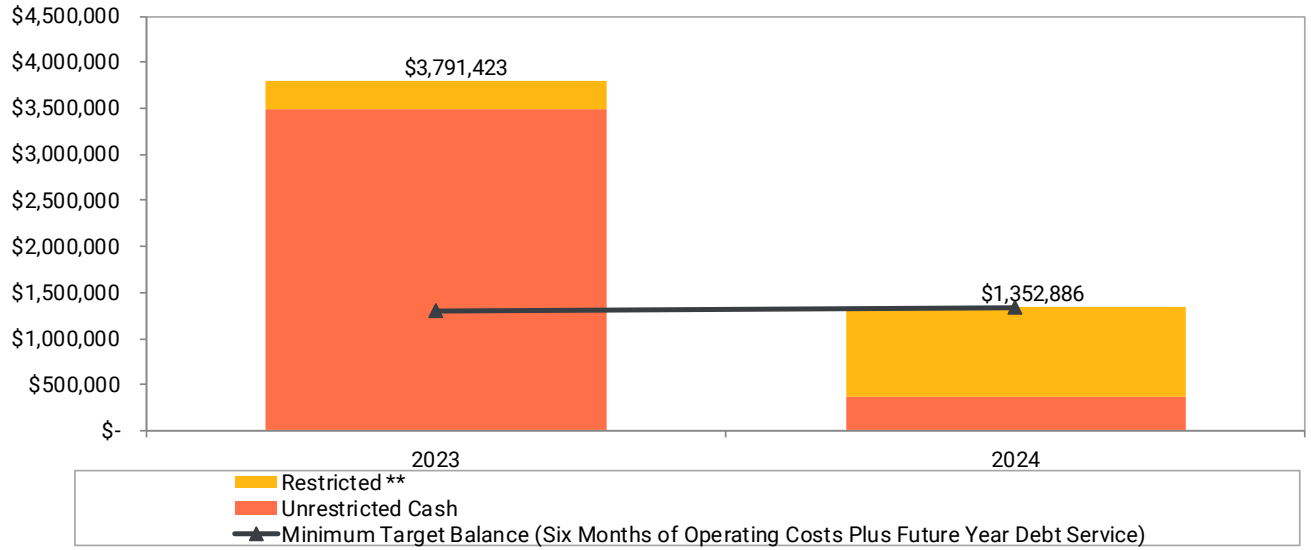

# Liquor Fund

## *Gross Profit and Cash Balances*

| | Off Sale Only Stores | | | North Branch | |
|---|---|---|---|---|---|
| | 2021 | 2022 | 2023 | 2023 | 2024 |
| | Percent of Sales | Percent of Sales | Percent of Sales | Percent of Sales | Percent of Sales |
| Sales | 100.0 % | 100.0 % | 100.0 % | 100.0 % | 100.0 |
| Cost of Sales | 73.5 | 73.2 | 72.8 | 73.3 | 72.4 |
| Gross Profit | 26.5 | 26.8 | 27.2 | 26.7 | 27.6 |
| Operating Expenses | (17.8) | (19.5) | (20.3) | (24.8) | (26.6) |
| Nonoperating Revenue (Expense) | 0.1 | (0.6) | 0.7 | 0.1 | 0.4 |
| Income Before Transfers | 8.8 % | 6.7 % | 7.6 % | 2.0 % | 1.4 |

Source: Analysis of Municipal Liquor Store Operations, for the year ended December 31, 2021, 2022, and 2023. Published by the Minnesota Office of the State Auditor

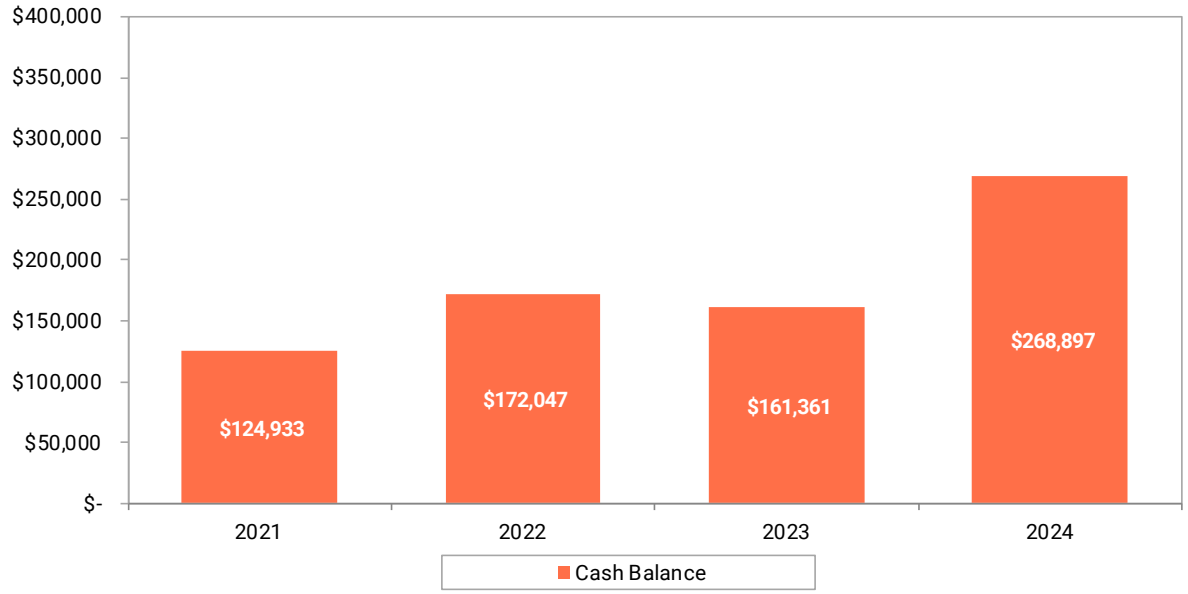

# Cash and Investments Balances

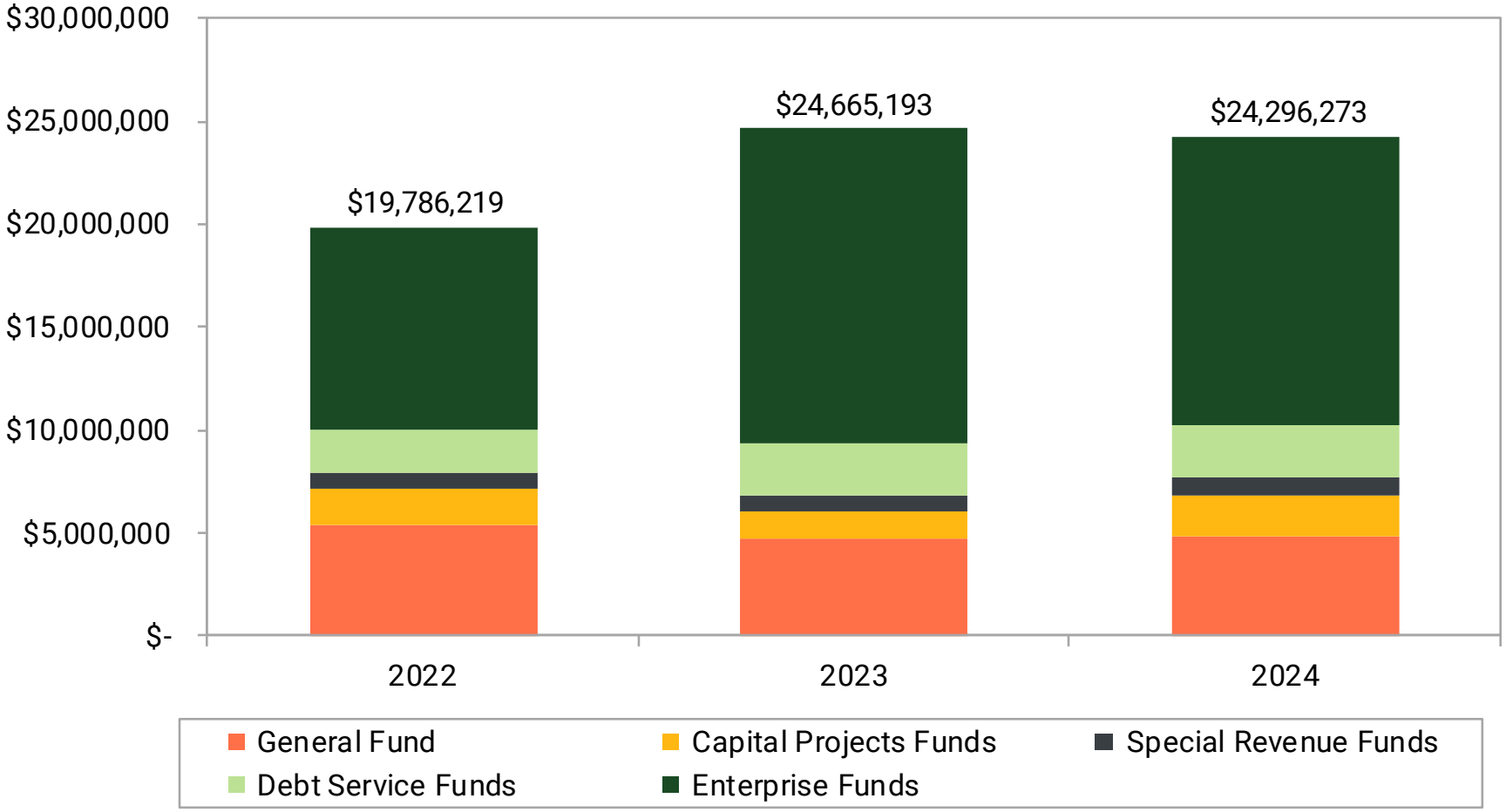

# Taxes

## Key Performance Indicators

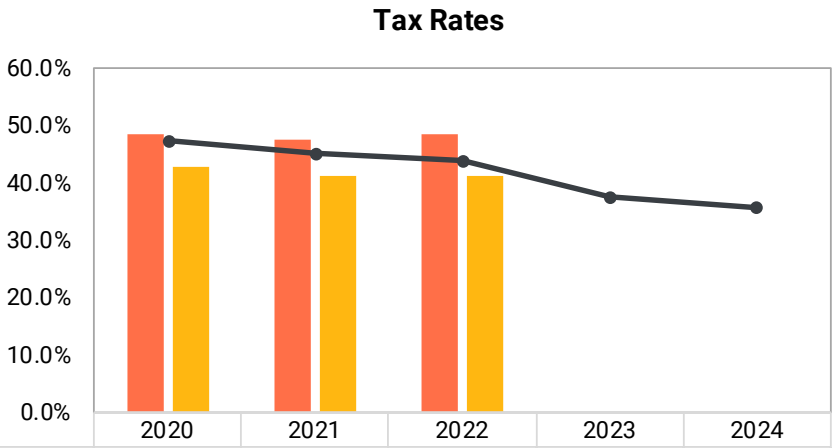


| | 2020 | 2021 | 2022 | 2023 | 2024 |
|---|---|---|---|---|---|
| Class 3 Cities | 48.4% | 47.6% | 48.4% | N/A | N/A |
| Cities in Chisago County | 42.7% | 41.4% | 41.1% | N/A | N/A |
| City of North Branch | 47.4% | 45.1% | 44.1% | 37.7% | 35.8% |

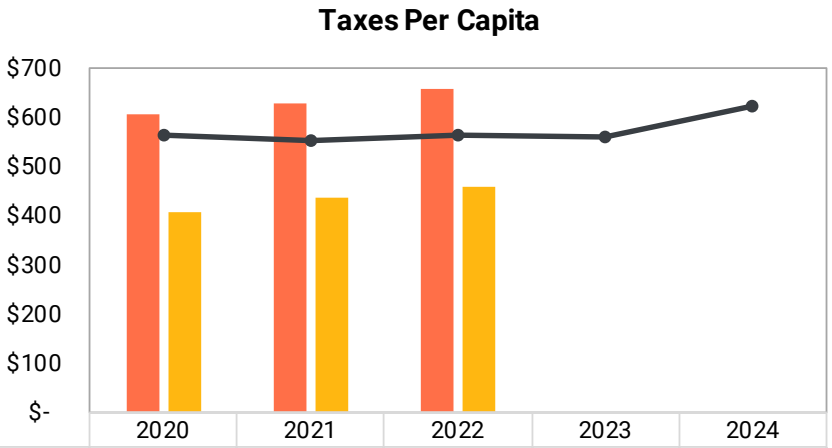


| | 2020 | 2021 | 2022 | 2023 | 2024 |
|---|---|---|---|---|---|
| Class 3 Cities | $608 | $629 | $660 | N/A | N/A |
| Cities in Chisago County | $408 | $437 | $457 | N/A | N/A |
| City of North Branch | $564 | $552 | $564 | $561 | $622 |

# Debt

## Key Performance Indicators

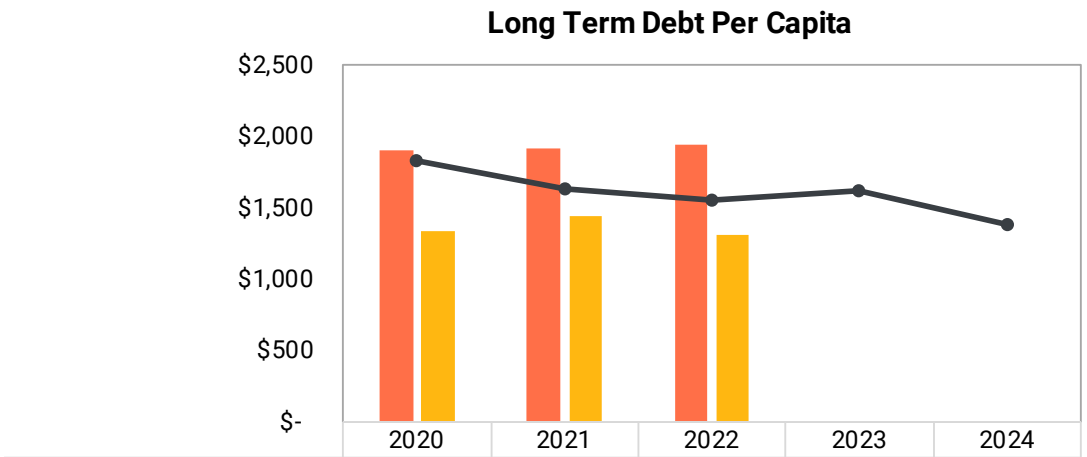


| | 2020 | 2021 | 2022 | 2023 | 2024 |
|---|---|---|---|---|---|
| Class 3 Cities | $1,905 | $1,918 | $1,937 | N/A | N/A |
| Cities in Chisago County | $1,342 | $1,448 | $1,305 | N/A | N/A |
| City of North Branch | $1,834 | $1,633 | $1,551 | $1,621 | $1,377 |

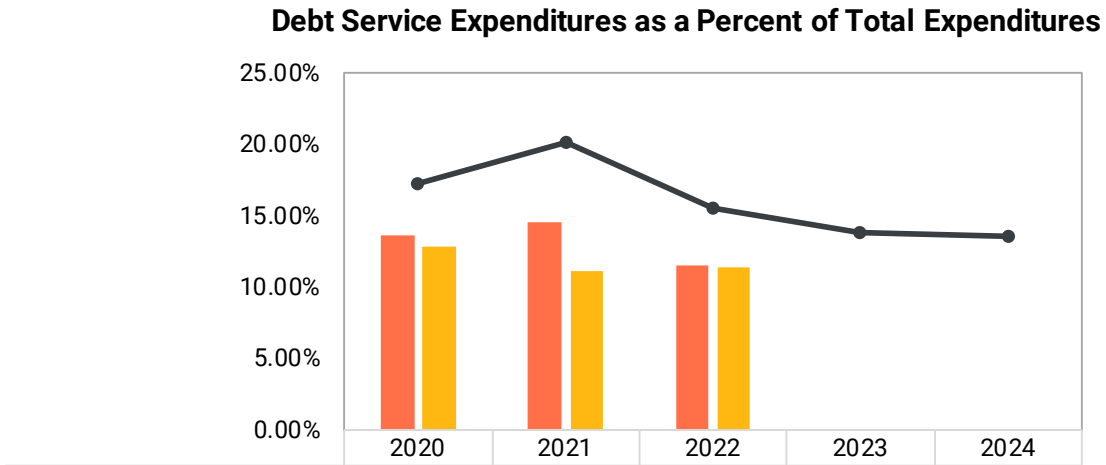


| | 2020 | 2021 | 2022 | 2023 | 2024 |
|---|---|---|---|---|---|
| Class 3 Cities | 13.65% | 14.57% | 11.46% | N/A | N/A |
| Cities in Chisago County | 12.80% | 11.17% | 11.43% | N/A | N/A |
| City of North Branch | 17.20% | 20.20% | 15.58% | 13.75% | 13.49% |

# Expenditures

## Key Performance Indicators

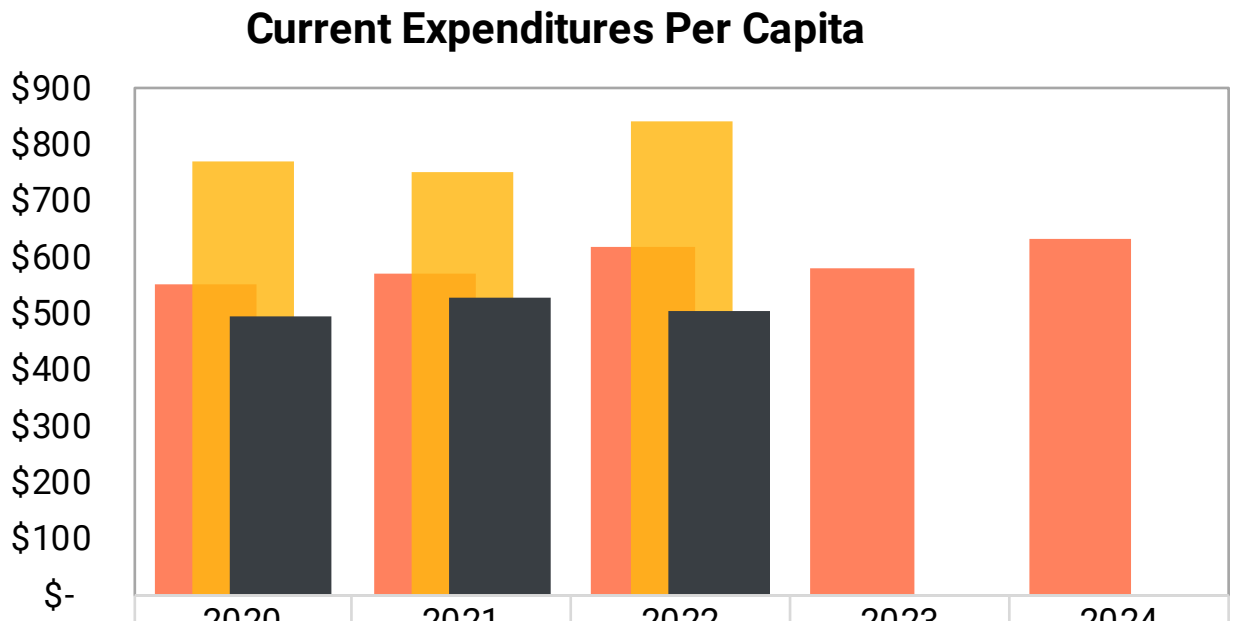


| | 2020 | 2021 | 2022 | 2023 | 2024 |
|---|---|---|---|---|---|
| City of North Branch | $551 | $572 | $619 | $579 | $632 |
| Class 3 Cities | $770 | $753 | $843 | N/A | N/A |
| Cities in Chisago County | $495 | $528 | $506 | N/A | N/A |

# Your Abdo Team

Justin Nilson, CPA

Partner

justin.nilson@abdosolutions.com

Kelsey Larson, CPA

Manager

kelsey.larson@abdosolutions.com

Adam Owens, CPA

Senior Associate

adam.ownes@abdosolutions.com

Jason Fagan

Associate

jason.fagan@abdosolutions.com

Phien Doan

Associate

phien.doan@abdosolutions.com

# ANNUAL FINANCIAL REPORT

CITY OF NORTH BRANCH
NORTH BRANCH, MINNESOTA

FOR THE YEAR ENDED
DECEMBER 31, 2024

THIS PAGE IS LEFT

BLANK INTENTIONALLY

City of North Branch, Minnesota
Annual Financial Report
Table of Contents
For the Year Ended December 31, 2024


| | Page No. |
|---|---|
| **Introductory Section** | |
| Elected and Appointed Officials | 9 |
| **Financial Section** | |
| Independent Auditor's Report | 13 |
| Management Discussion and Analysis | 17 |
| **Basic Financial Statements** | |
| Government-wide Financial Statements | |
| Statement of Net Position | 33 |
| Statement of Activities | 34 |
| Fund Financial Statements | |
| Governmental Funds | |
| Balance Sheet | 38 |
| Reconciliation of the Balance Sheet to the Statement of Net Position | 39 |
| Statement of Revenues, Expenditures and Changes in Fund Balances | 40 |
| Reconciliation of the Statement of Revenues, Expenditures and Changes in Fund Balances of Governmental Funds to the Statement of Activities | 41 |
| General Fund | |
| Statement of Revenues, Expenditures and Changes in Fund Balances - Budget and Actual | 43 |
| Proprietary Funds | |
| Statement of Net Position | 44 |
| Statement of Revenues, Expenses and Changes in Net Position | 48 |
| Statement of Cash Flows | 50 |
| Notes to the Financial Statements | 55 |
| **Required Supplementary Information** | |
| Schedule of Employer's Share of Public Employees Retirement Association Net Pension Liability - General Employees Retirement Fund | 94 |
| Schedule of Employer's Public Employees Retirement Association Contributions - General Employees Retirement Fund | 94 |
| Notes to the Required Supplementary Information – General Employees Retirement Fund | 95 |
| Schedule of Employer's Share of Public Employees Retirement Association Net Pension Liability - Public Employees Police and Fire Fund | 97 |
| Schedule of Employer's Public Employees Retirement Association Contributions - Public Employees Police and Fire Fund | 97 |
| Notes to the Required Supplementary Information – Public Employees Police and Fire Fund | 98 |
| Schedule of Changes in the Fire Relief Association's Net Pension Liability (Asset) and Related Ratios | 100 |
| Notes to the Required Supplementary Information – Fire Relief Association | 100 |
| Schedule of Employer's Fire Relief Associations Contributions | 101 |
| Schedule of Changes in the City's total OPEB Liability and Related Ratios | 102 |

THIS PAGE IS LEFT

BLANK INTENTIONALLY

| | Page No. |
|---|---|
| **Combining and Individual Fund Financial Statement and Schedules** | |
| Nonmajor Special Revenue Funds | |
| Combining Balance Sheet | 104 |
| Combining Statement of Revenues, Expenditures and Changes in Fund Balances | 106 |
| Capital Projects Funds | |
| Combining Balance Sheet | 108 |
| Combing Schedule of Revenues, Expenditures and Changes in Fund Balances | 110 |
| Debt Service Fund | |
| Combining Balance Sheet | 112 |
| Combining Schedule of Revenues, Expenditures and Changes in Fund Balances | 114 |
| General Fund | |
| Schedule of Revenues, Expenditures and Changes in Fund Balances - Budget and Actual | 116 |
| Summary Financial Report | |
| Revenues and Expenditures for General Operations - Governmental Funds | 120 |
| **Other Required Reports** | |
| Independent Auditors Report on Minnesota Legal Compliance | 123 |
| Independent Auditor's Report on Internal Control Over Financial Reporting and on Compliance and Other Matters Based on an Audit of Financial Statements Performed in Accordance with *Government Auditing Standards* | 124 |
| Schedule of Findings and Responses | 127 |

THIS PAGE IS LEFT

BLANK INTENTIONALLY

INTRODUCTORY SECTION

CITY OF NORTH BRANCH
NORTH BRANCH, MINNESOTA

FOR THE YEAR ENDED
DECEMBER 31, 2024

THIS PAGE IS LEFT

BLANK INTENTIONALLY

# City of North Branch, Minnesota
Elected and Appointed Officials
For the Year Ended December 31, 2024

**CITY COUNCIL**

| Name | Title | Term Expires |
|---|---|---|
| Kevin Schieber | Mayor | 12/31/24 |
| Robert Canada | Council Member | 12/31/24 |
| Kelly Neider | Council Member | 12/31/24 |
| Travis Miles | Council Member | 12/31/26 |
| Peter Schaps | Council Member | 12/31/26 |

**CITY OFFICIALS**

| Name | Title |
|---|---|
| Matthew Hill | City Administrator |
| Sharon Wright | Finance Director |

THIS PAGE IS LEFT

BLANK INTENTIONALLY

FINANCIAL SECTION

CITY OF NORTH BRANCH
NORTH BRANCH, MINNESOTA

FOR THE YEAR ENDED
DECEMBER 31, 2024

THIS PAGE IS LEFT

BLANK INTENTIONALLY

**INDEPENDENT AUDITOR'S REPORT**

Honorable Mayor and City Council
City of North Branch, Minnesota

**Opinions**

We have audited the accompanying financial statements of the governmental activities, the business-type activities, each major fund and the aggregate remaining fund information of the City of North Branch, Minnesota (the City), as of and for the year ended December 31, 2024, and the related notes to the financial statements, which collectively comprise the City's basic financial statements as listed in the table of contents.

In our opinion, the financial statements referred to above present fairly, in all material respects, the respective financial position of the governmental activities, the business-type activities, each major fund and the aggregate remaining fund information of the City as of December 31, 2024, and the respective changes in financial position and, where applicable, cash flows thereof and the respective budgetary comparison for the General fund for the year then ended in accordance with accounting principles generally accepted in the United States of America.

**Basis for Opinions**

We conducted our audit in accordance with auditing standards generally accepted in the United States of America and the standards applicable to financial audits contained in *Government Auditing Standards*, issued by the Comptroller General of the United States. Our responsibilities under those standards are further described in the Auditor's Responsibilities for the Audit of the Financial Statements section of our report. We are required to be independent of the City and to meet our other ethical responsibilities, in accordance with the relevant ethical requirements relating to our audit. We believe that the audit evidence we have obtained is sufficient and appropriate to provide a basis for our audit opinions.

**Management's Responsibility for the Financial Statements**

Management is responsible for the preparation and fair presentation of these financial statements in accordance with accounting principles generally accepted in the United States of America; this includes the design, implementation, and maintenance of internal control relevant to the preparation and fair presentation of financial statements that are free from material misstatement, whether due to fraud or error.

In preparing the financial statements, management is required to evaluate whether there are conditions or events, considered in the aggregate, that raise substantial doubt about the City's ability to continue as a going concern for twelve months beyond the financial statement date, including any currently known information that may raise substantial doubt shortly thereafter.

**Auditor's Responsibilities for the Audit of the Financial Statements**

Our objectives are to obtain reasonable assurance about whether the financial statements as a whole are free from material misstatement, whether due to fraud or error, and to issue an auditor's report that includes our opinions. Reasonable assurance is a high level of assurance but is not absolute assurance and therefore is not a guarantee that an audit conducted in accordance with generally accepted auditing standards and *Government Auditing Standards* will always detect a material misstatement when it exists. The risk of not detecting a material misstatement resulting from fraud is higher than for one resulting from error, as fraud may involve collusion, forgery, intentional omissions, misrepresentations, or the override of internal control. Misstatements are considered material if there is a substantial likelihood that, individually or in the aggregate, they would influence the judgment made by a reasonable user based on the financial statements.

In performing an audit in accordance with generally accepted auditing standards and *Government Auditing Standards*, we:

- Exercise professional judgment and maintain professional skepticism throughout the audit.
- Identify and assess the risks of material misstatement of the financial statements, whether due to fraud or error, and design and perform audit procedures responsive to those risks. Such procedures include examining, on a test basis, evidence regarding the amounts and disclosures in the financial statements.
- Obtain an understanding of internal control relevant to the audit in order to design audit procedures that are appropriate in the circumstances, but not for the purpose of expressing an opinion on the effectiveness of the City's internal control. Accordingly, no such opinion is expressed.
- Evaluate the appropriateness of accounting policies used and the reasonableness of significant accounting estimates made by management, as well as evaluate the overall presentation of the financial statements.
- Conclude whether, in our judgment, there are conditions or events, considered in the aggregate, that raise substantial doubt about the City's ability to continue as a going concern for a reasonable period of time.

We are required to communicate with those charged with governance regarding, among other matters, the planned scope and timing of the audit, significant audit findings, and certain internal control-related matters that we identified during the audit.

***Required Supplementary Information***

Accounting principles generally accepted in the United States of America require that the Management's Discussion and Analysis starting on page 17 and the Schedules of Employer's Share of the Net Pension Liability, the Schedule of Changes in Fire Relief Net Pension Liability (Asset) and Related Ratios, the Schedules of Employer's Contributions, the related note disclosures, and the Schedule of Changes in the City's OPEB Liability and Related Ratios starting on page 94 be presented to supplement the basic financial statements. Such information is the responsibility of management and, although not a part of the basic financial statements, is required by the Governmental Accounting Standards Board who considers it to be an essential part of financial reporting for placing the basic financial statements in an appropriate operational, economic, or historical context. We have applied certain limited procedures to the required supplementary information in accordance with auditing standards generally accepted in the United States of America, which consisted of inquiries of management about the methods of preparing the information and comparing the information for consistency with management's responses to our inquiries, the basic financial statements, and other knowledge we obtained during our audit of the basic financial statements. We do not express an opinion or provide any assurance on the information because the limited procedures do not provide us with sufficient evidence to express an opinion or provide any assurance.

***Supplementary Information***

Our audit was conducted for the purpose of forming opinions on the financial statements that collectively comprise the City's basic financial statements. The accompanying combining and individual fund financial statements and schedules, are presented for purposes of additional analysis and are not a required part of the basic financial statements. Such information is the responsibility of management and was derived from and related directly to the underlying accounting and other records used to prepare the basic financial statements. The information has been subjected to the auditing procedures applied in the audit of the basic financial statements and certain additional procedures, including comparing and reconciling such information directly to the underlying accounting and other records used to prepare the basic financial statements or to the basic financial statements themselves, and other additional procedures in accordance with auditing standards generally accepted in the United States of America. In our opinion, the combining and individual fund financial statements and schedules are fairly stated, in all material respects, in relation to the basic financial statements as a whole.

***Other Information***

Management is responsible for the other information in the annual report. The other information comprises the introductory section and statistical section but does not include the basic financial statements and our auditor's report thereon. Our opinions on the basic financial statement do not cover the other information, and we do not express an opinion or any form of assurance thereon.

In connection with our audit of the basic financial statements, our responsibility is to read the other information and consider whether a material inconsistency exists between the other information and the basic financial statements or the other information otherwise appears to be materially misstated. If, based on the work performed, we conclude that an uncorrected material misstatement of the other information exists, we are required to describe it in our report.

**Other Reporting Required by *Government Auditing Standards***

In accordance with *Government Auditing Standards*, we have also issued our report dated June 4, 2025, on our consideration of the City's internal control over financial reporting and on our tests of its compliance with certain provisions of laws, regulations, contracts, and grant agreements and other matters. The purpose of that report is solely to describe the scope of our testing of internal control over financial reporting and compliance and the results of that testing, and not to provide an opinion on the effectiveness of the City's internal control over financial reporting or on compliance. That report is an integral part of an audit performed in accordance with *Government Auditing Standards* in considering the City's internal control over financial reporting and compliance.

Abdo

**Abdo**
Minneapolis, Minnesota
June 4, 2025

THIS PAGE IS LEFT

BLANK INTENTIONALLY

## Management's Discussion and Analysis

As management of the City of North Branch, Minnesota, (the City), we offer readers of the City's financial statements this narrative overview and analysis of the financial activities of the City for the fiscal year ended December 31, 2024.

**Financial Highlights**

- The assets and deferred outflows of resources of the City exceeded its liabilities and deferred inflows of resources at the close of the most recent fiscal year as shown in the summary of net position on the following pages. The unrestricted amount of net position may be used to meet the City's ongoing obligations to citizens and creditors.

- The City's total net position increased as shown in the summary of changes in net assets table on the following pages. The increase this year was due to increases in property taxes/tax increments and business-type charges for services and capital grants and contributions continuing to outweigh expenses.

- For the current fiscal year, the City's governmental fund balances are shown in the Financial Analysis of the City's Funds section of the MD&A. The total fund balance increased in comparison with the prior year. This increase was mainly due to increased tax revenues.

- Unassigned fund balance in the General fund as shown in the financial analysis of the City's funds section decreased from prior year.

- The City's total bonded debt decreased during the fiscal year. The decrease was a result of scheduled debt service payments as shown on the outstanding debt table.

**Overview of the Financial Statements**

This discussion and analysis are intended to serve as an introduction to the City's basic financial statements. The City's basic financial statements comprise three components: 1) government-wide financial statements, 2) fund financial statements, and 3) notes to the financial statements. This report also contains other supplemental information in addition to the basic financial statements themselves.

The basic financial statements present two different views of the City through the use of government-wide statements and fund financial statements. In addition to the basic financial statement, this report contains other supplemental information that will enhance the reader's understanding of the financial condition of the City of North Branch.

**Figure 1**
**Required Components of the**
**City's Annual Financial Report**

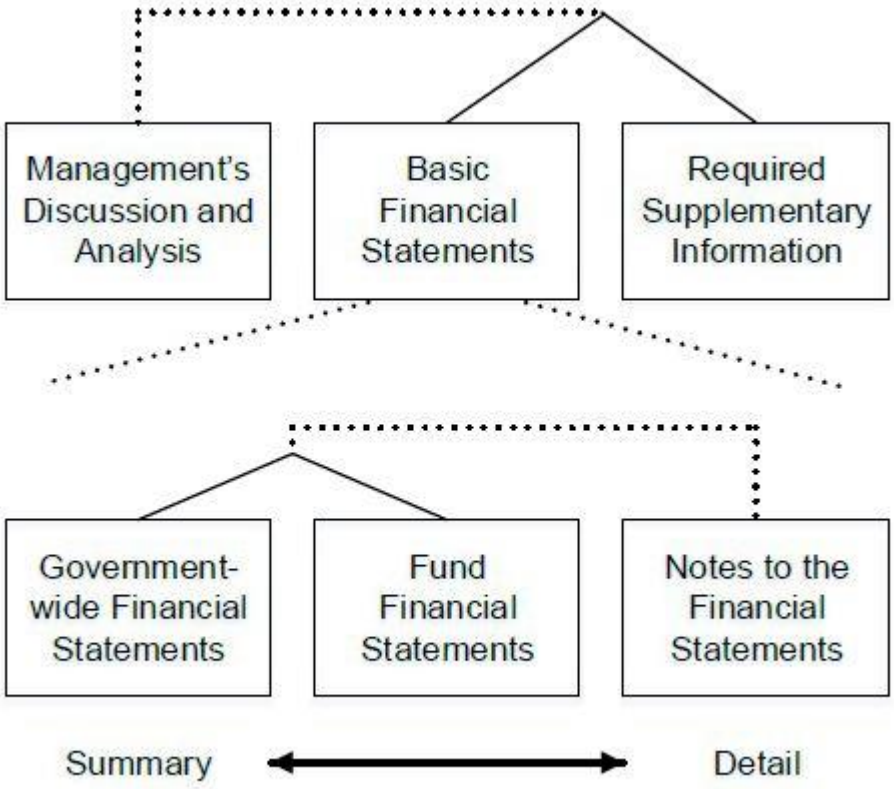

Figure 2 summarizes the major features of the City's financial statements, including the portion of the City government they cover and the types of information they contain. The remainder of this overview section of management's discussion and analysis explains the structure and contents of each of the statements.

**Figure 2**
**Major Features of the Government-wide and Fund Financial Statements**

| | | Fund Financial Statements | |
|---|---|---|---|
| | **Government-wide Statements** | **Governmental Funds** | **Proprietary Funds** |
| Scope | Entire City government and the City's component units | The activities of the City that are not proprietary, such as police, fire and parks | Activities the City operates similar to private businesses, such as the water, sewer, storm and generation systems |
| Required financial statements | • Statement of Net Position<br>• Statement of Activities | • Balance Sheet<br>• Statement of Revenues, Expenditures, and Changes in Fund Balances | • Statement of Net Position<br>• Statement of Revenues, Expenses and Changes in Net Position<br>• Statement of Cash Flows |
| Accounting basis and measurement focus | Accrual accounting and economic resources focus | Modified accrual accounting and current financial resources focus | Accrual accounting and economic resources focus |
| Type of asset/liability information | All assets and liabilities, both financial and capital, and short-term and long-term | Only assets expected to be used up and liabilities that come due during the year or soon thereafter; no capital assets included | All assets and liabilities, both financial and capital, and short-term and long-term |
| Type of deferred outflows/inflows of resources information | All deferred outflows/inflows of resources, regardless of when cash is received or paid | Only deferred outflows of resources expected to be used up and deferred inflows of resources that come due during the year or soon thereafter; no capital assets included | All deferred outflows/inflows of resources, regardless of when cash is received or paid |
| Type of inflow/outflow information | All revenues and expenses during year, regardless of when cash is received or paid | Revenues for which cash is received during or soon after the end of the year; expenditures when goods or services have been received and payment is due during the year or soon thereafter | All revenues and expenses during the year, regardless of when cash is received or paid |

**Government-wide Financial Statements.** The *government-wide financial statements* are designed to provide readers with a broad overview of the City's finances, in a manner similar to a private-sector business.

The *statement of net position* presents information on all of the City's assets, deferred outflows of resources, liabilities, and deferred inflows of resources, with the difference reported as *net position*. Over time, increases or decreases in net position may serve as a useful indicator of whether the financial position of the City is improving or deteriorating.

The *statement of activities* presents information showing how the City's net position changed during the most recent fiscal year. All changes in net position are reported as soon as the underlying event giving rise to the change occurs, *regardless of the timing of related cash flows*. Thus, revenues and expenses are reported in this statement for some items that will only result in cash flows in future fiscal periods (e.g., uncollected taxes).

Both of the government-wide financial statements distinguish functions of the City that are principally supported by taxes and intergovernmental revenues (*governmental activities*) from other functions that are intended to recover all or a significant portion of their costs through user fees and charges (*business-type activities*). The governmental activities of the City include general government, public safety, public works, culture and recreation, and economic development. The business-type activities of the City include sewer, municipal liquor, storm sewer, water, and generation.

The government-wide financial statements start on page 33 of this report.

**Fund Financial Statements.** A *fund* is a grouping of related accounts that is used to maintain control over resources that have been segregated for specific activities or objectives. The City, like other state and local government, uses fund accounting to ensure and demonstrate compliance with finance-related legal requirements. All of the funds of the City can be divided into two categories: governmental funds and proprietary funds.

***Governmental Funds.*** *Governmental funds* are used to account for essentially the same functions reported as *governmental activities* in the government-wide financial statements. However, unlike the government-wide financial statements, governmental fund financial statements focus on *near-term inflows and outflows of spendable resources*, as well as on *balances of spendable resources* available at the end of the fiscal year. Such information may be useful in evaluating a government's near-term financing requirements.

Because the focus of governmental funds is narrower than that of the government-wide financial statements, it is useful to compare the information presented for *governmental funds* with similar information presented for *governmental activities* in the government-wide financial statements. By doing so, readers may better understand the long-term impact by the government's near-term financing decisions. Both the governmental fund balance sheet and the governmental fund statement of revenues, expenditures and changes in fund balances provide a reconciliation to facilitate this comparison between *governmental funds* and *governmental activities*.

The City maintains several individual governmental funds. Information is presented separately in the governmental fund balance sheet and in the governmental fund statement of revenues, expenditures and changes in fund balances for the General fund, Debt Service fund and the Capital Projects fund, all of which are considered to be major funds. Data from the other governmental funds are combined into a single, aggregated presentation. Individual fund data for each of these nonmajor governmental funds is provided in the form of *combining statements and schedules* elsewhere in this report.

The City adopts an annual appropriated budget for the General fund. A budgetary comparison statements has been provided to demonstrate compliance with this budget.

The basic governmental fund financial statements start on page 38 of this report.

***Proprietary Funds*.** The City maintains one type of proprietary fund. *Enterprise funds* are used to report the same functions presented as *business-type activities* in the government-wide financial statements. The City uses enterprise funds to account for its sewer, municipal liquor, storm sewer, water, and generation.

Proprietary funds provide the same type of information as the government-wide financial statements, only in more detail. The proprietary fund financial statements provide separate information for each of the enterprise funds which are considered to be major funds of the City.

The basic proprietary fund financial statements start on page 44 of this report.

**Notes to the Financial Statements.** The notes provide additional information that is essential to a full understanding of the data provided in the government-wide and fund financial statements. The notes to the financial statements start on page 55 of this report.

**Required Supplementary Information.** In addition to the basic financial statement and accompanying notes, this report also presents certain required supplementary information concerning the City's share of net pension liabilities for defined benefit plans, schedules of contributions and notes, schedule of changes in the fire relief association pension asset and related ratios and notes, and progress in funding its obligation to provide pension and other postemployment benefits to its employees. Required supplementary information can be found starting on page 94 of this report.

**Other Information.** The combining statements and schedules referred to earlier in connection with nonmajor governmental funds, Debt Service funds and Capital Project funds are presented immediately following the notes to the financial statements. Combining and individual fund financial statements and schedules start on page 104 of this report.

**Government-wide Financial Analysis**

As noted earlier, net position may serve over time as a useful indicator of a government's financial position. In the case of the City, assets and deferred outflows of resources exceeded liabilities and deferred inflows of resources at the close of the most recent fiscal year.

A large portion of the City's net position reflects its investment in capital assets (e.g., land, buildings, machinery, and equipment); less any related debt used to acquire those assets that is still outstanding. The City uses these capital assets to provide services to citizens; consequently, these assets are *not* available for future spending. Although the City's investment in its capital assets is reported net of related debt, it should be noted that the resources needed to repay this debt must be provided from other sources, since the capital assets themselves cannot be used to liquidate these liabilities.

## City of North Branch's Summary of Net Position

| | Governmental Activities | | | Business-type Activities | | |
|---|---|---|---|---|---|---|
| | 2024 | 2023 | Increase (Decrease) | 2024 | 2023 | Increase (Decrease) |
| Assets | | | | | | |
| Current and other assets | $ 20,218,171 | $ 19,227,218 | $ 990,953 | $ 15,884,804 | $ 17,287,545 | $ (1,402,741) |
| Capital assets | 41,223,570 | 38,969,245 | 2,254,325 | 44,552,204 | 41,916,268 | 2,635,936 |
| Total Assets | 61,441,741 | 58,196,463 | 3,245,278 | 60,437,008 | 59,203,813 | 1,233,195 |
| Deferred Outflows of Resources | | | | | | |
| Deferred pension resources | 2,683,742 | 3,417,382 | (733,640) | 83,182 | 330,484 | (247,302) |
| Deferred other post employment benefit resources | 25,373 | - | 25,373 | 7,818 | - | 7,818 |
| Total Deferred Outflows of Resources | 2,709,115 | 3,417,382 | (708,267) | 91,000 | 330,484 | (239,484) |
| Liabilities | | | | | | |
| Long-term liabilities outstanding | 10,510,526 | 12,240,506 | (1,729,980) | 9,080,504 | 11,015,948 | (1,935,444) |
| Other liabilities | 1,035,285 | 841,272 | 194,013 | 559,767 | 1,446,740 | (886,973) |
| Total Liabilities | 11,545,811 | 13,081,778 | (1,535,967) | 9,640,271 | 12,462,688 | (2,822,417) |
| Deferred Inflows of Resources | | | | | | |
| Deferred pension resources | 3,028,512 | 3,095,016 | (66,504) | 319,162 | 291,192 | 27,970 |
| Deferred other post employment benefit resources | 9,937 | - | 9,937 | 3,061 | - | 3,061 |
| Deferred lease resources | - | - | - | 494,347 | 528,731 | (34,384) |
| Total Deferred Inflows of Resources | 3,038,449 | 3,095,016 | (56,567) | 816,570 | 819,923 | (3,353) |
| Net Position | | | | | | |
| Net investment in capital assets | 33,775,618 | 32,657,509 | 1,118,109 | 36,039,018 | 31,779,561 | 4,259,457 |
| Restricted | 6,445,116 | 6,863,325 | (418,209) | 986,350 | 298,752 | 687,598 |
| Unrestricted | 9,345,862 | 5,916,217 | 3,429,645 | 13,045,799 | 14,173,373 | (1,127,574) |
| Total Net Position | $ 49,566,596 | $ 45,437,051 | $ 4,129,545 | $ 50,071,167 | $ 46,251,686 | $ 3,819,481 |
| Net Position as a Percent of Total | | | | | | |
| Net investment in capital assets | 68.1 % | 71.9 % | | 72.0 % | 68.7 % | |
| Restricted | 13.0 | 15.1 | | 2.0 | 0.6 | |
| Unrestricted | 18.9 | 13.0 | | 26.1 | 30.6 | |
| | 100.0 % | 100.0 % | | 100.0 % | 100.0 % | |

An additional portion of the City's net position represents resources that are subject to external restrictions on how they may be used. The remaining balance of unrestricted net position may be used to meet the City's ongoing obligations to citizens and creditors.

.

**Governmental Activities.** Governmental activities increased the City's net position. Key elements of this increase are as follows:

## City of North Branch's Changes in Net Position

| | Governmental Activities | | | Business-type Activities | | |
|---|---|---|---|---|---|---|
| | 2024 | 2023 | Increase (Decrease) | 2024 | 2023 | Increase (Decrease) |
| Revenues | | | | | | |
| Program Revenues | | | | | | |
| Charges for services | $ 800,076 | $ 625,231 | $ 174,845 | $ 6,527,054 | $ 6,777,354 | $ (250,300) |
| Operating grants and contributions | 1,702,987 | 1,029,866 | 673,121 | - | 738,490 | (738,490) |
| Capital grants and contributions | 1,590,619 | 4,511,534 | (2,920,915) | 2,601,410 | 3,132,173 | (530,763) |
| Grants and contributions not restricted | 1,141,961 | 927,485 | 214,476 | - | - | - |
| General Revenues | | | | | | |
| Property taxes/tax increments | 6,996,785 | 6,255,366 | 741,419 | - | - | - |
| Franchise taxes | 355,086 | 335,849 | 19,237 | - | - | - |
| Other taxes | 26,475 | - | 26,475 | - | - | - |
| Other general revenues | 153,327 | 135,883 | 17,444 | 24,956 | - | 24,956 |
| Gain on sale of capital assets | - | - | - | 9,100 | 18,000 | (8,900) |
| Unrestricted investment earnings | 288,249 | 386,712 | (98,463) | 485,125 | 441,743 | 43,382 |
| Total Revenues | 13,055,565 | 14,207,926 | (1,152,361) | 9,647,645 | 11,107,760 | (1,460,115) |
| Expenses | | | | | | |
| General government | 1,561,708 | 1,809,834 | (248,126) | - | - | - |
| Economic development | 183,842 | - | 183,842 | - | - | - |
| Public safety | 3,837,341 | 3,820,500 | 16,841 | - | - | - |
| Public works | 2,697,873 | 2,023,433 | 674,440 | - | - | - |
| Culture and recreation | 547,470 | 524,310 | 23,160 | - | - | - |
| Interest on long-term debt | 217,049 | 261,128 | (44,079) | - | - | - |
| Sewer | - | - | - | 1,733,708 | 1,623,730 | 109,978 |
| Municipal liquor | - | - | - | 1,094,282 | 993,440 | 100,842 |
| Storm water | - | - | - | 599,673 | 757,744 | (158,071) |
| Water | - | - | - | 1,929,564 | 1,946,765 | (17,201) |
| Generation | - | - | - | 351,674 | 605,945 | (254,271) |
| Total Expenses | 9,045,283 | 8,439,205 | 606,078 | 5,708,901 | 5,927,624 | (218,723) |
| Increase (Decrease) in Net Position | | | | | | |
| Before Special Items and Transfers | 4,010,282 | 5,768,721 | (1,758,439) | 3,938,744 | 5,180,136 | (1,241,392) |
| Special Item - Gain on Sale of Electric Assets | - | - | - | - | 3,818,942 | (3,818,942) |
| Transfers | 119,263 | 50,000 | 69,263 | (119,263) | (50,000) | (69,263) |
| Change in Net Position | 4,129,545 | 5,818,721 | (1,689,176) | 3,819,481 | 8,949,078 | (5,129,597) |
| Net Position, January 1 | 45,437,051 | 39,618,330 | 5,818,721 | 46,251,686 | 37,302,608 | 8,949,078 |
| Net Position, December 31 | $ 49,566,596 | $ 45,437,051 | $ 4,129,545 | $ 50,071,167 | $ 46,251,686 | $ 3,819,481 |

- Capital grants and contributions decreased due to less developer contributions received in 2024.
- Operating grants and contributions increased due to increased Municipal State Aid activity.
- Public works expenses increased due to equipment purchases during the year.

The following graphs depict various governmental activities and show the revenue and expenses directly related to those activities.

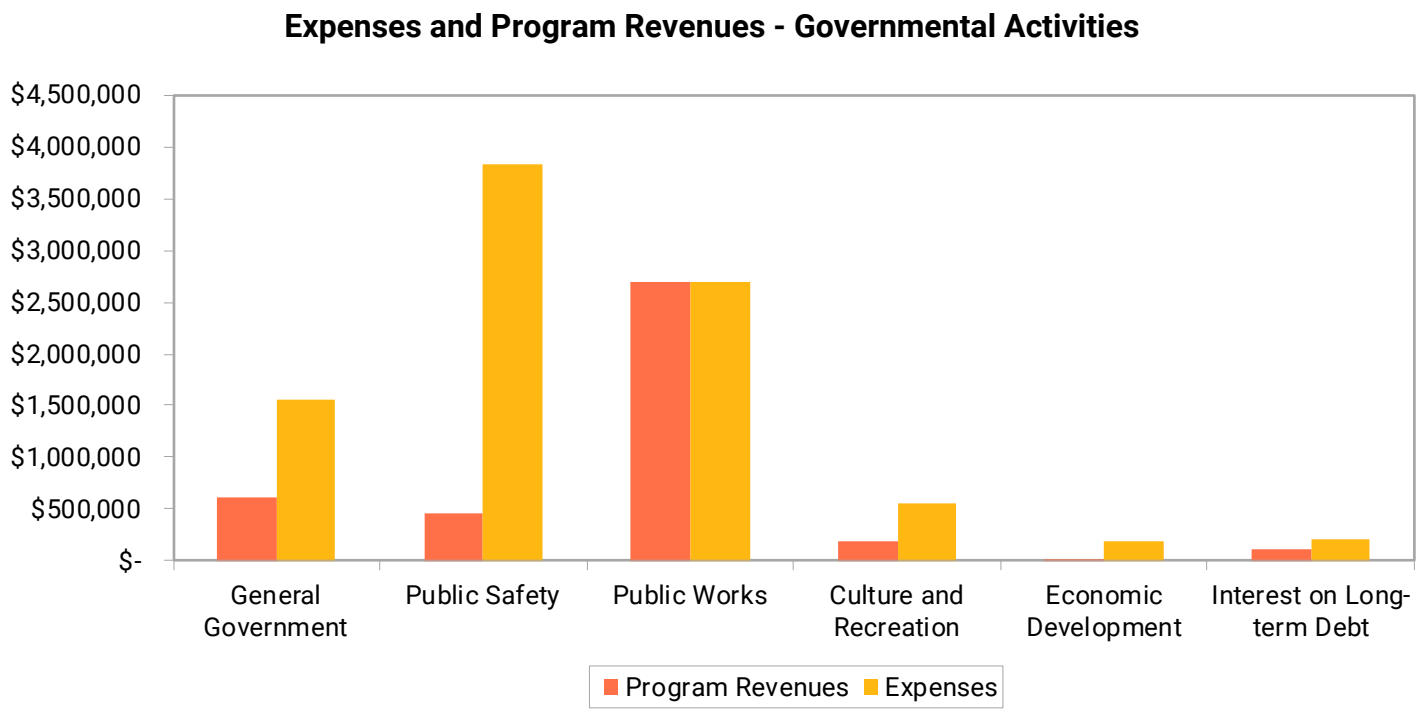


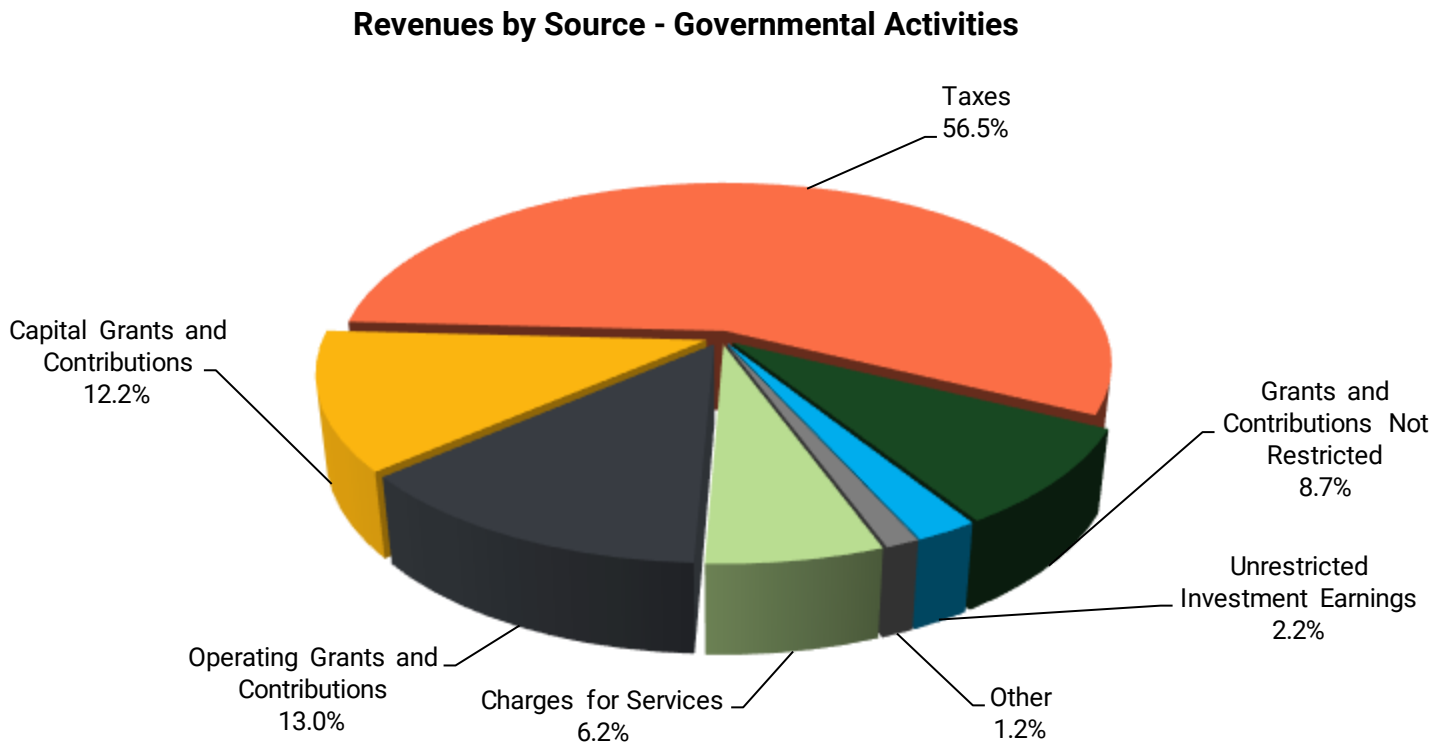

**Business-type Activities.** Business-type activities increased the City's net position. Key elements of this increase are as follows:

- Charges for services decreased due to the sale of electric operations in the prior year.
- Storm sewer expenses decreased due to less repairs and maintenance needed in the current year.
- Generation expenses decreased due to the sale of electric operations in the prior year.

**Expenses and Program Revenues - Business - type Activities**

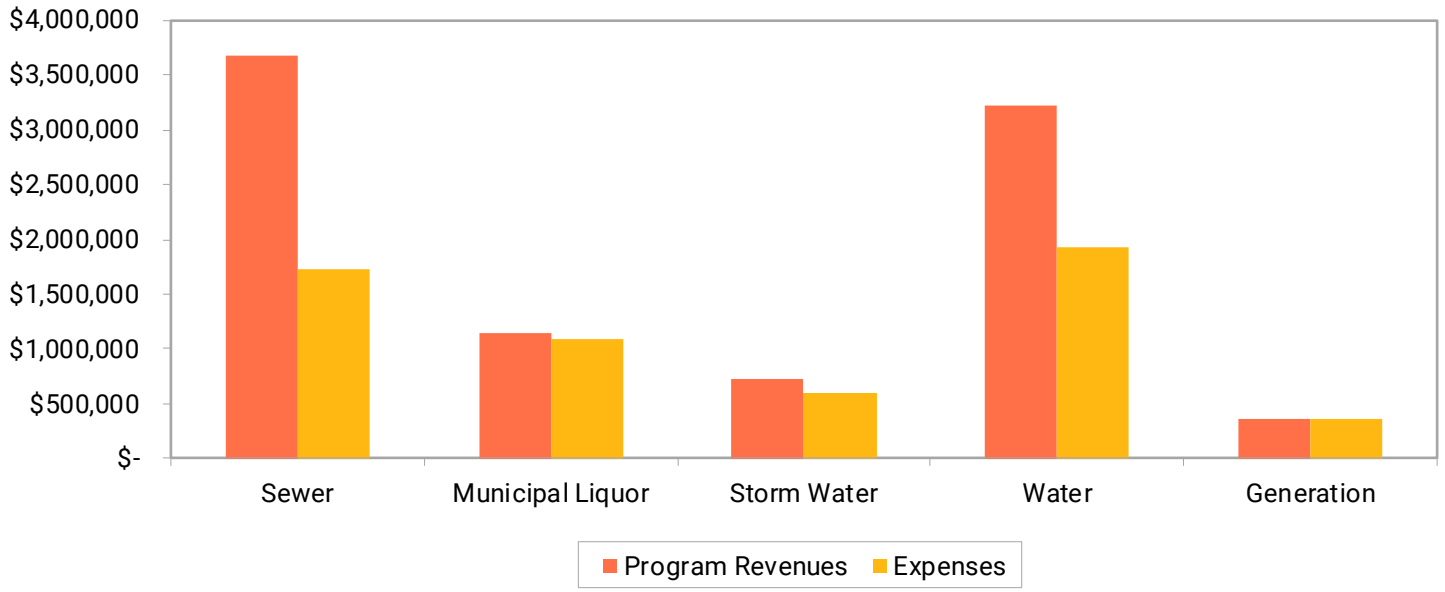


**Revenues by Source - Business - type Activities**

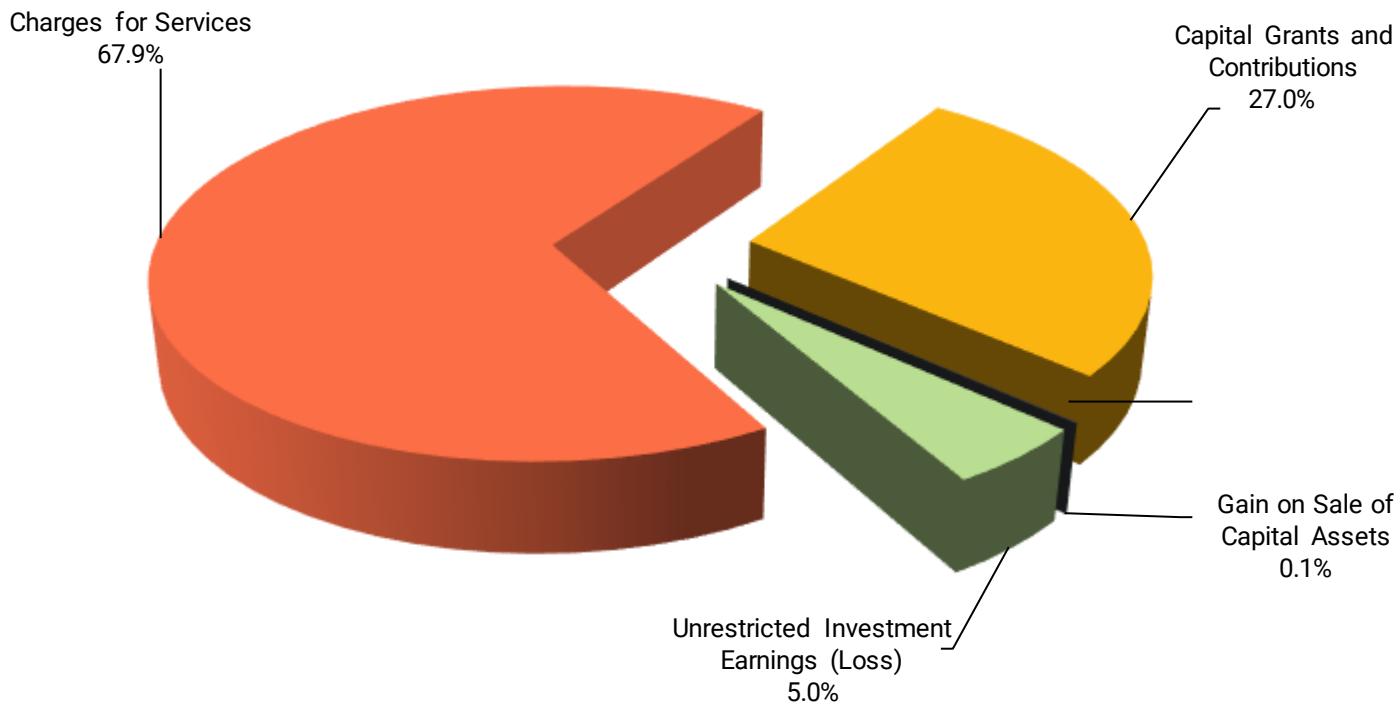

**Financial Analysis of the City's Funds**

As noted earlier, the City uses fund accounting to ensure and demonstrate compliance with finance-related legal requirements.

***Governmental Funds***. The focus of the City's *governmental funds* is to provide information on near-term inflows, outflows and balances of *spendable* resources. Such information is useful in assessing the City's financing requirements. In particular, *unassigned fund balance* may serve as a useful measure of a government's net resources available for spending at the end of the fiscal year. The table below outlines the governmental fund balances for the year ending December 31, 2024.

| | General Fund | Debt Service Fund | Capital Projects | Other Governmental Funds | Total | Prior Year Total | Increase/ (Decrease) |
|---|---|---|---|---|---|---|---|
| Fund Balances | | | | | | | |
| Nonspendable | $ 489,849 | $ - | $ - | $ - | $ 489,849 | $ 379,893 | $ 109,956 |
| Restricted | 1,489,704 | 2,592,779 | 2,106,000 | 703,975 | 6,892,458 | 5,910,696 | 981,762 |
| Committed | - | - | 175,000 | 317,883 | 492,883 | 79,389 | 413,494 |
| Assigned | - | - | 7,178,232 | - | 7,178,232 | 6,826,729 | 351,503 |
| Unassigned | 3,353,877 | - | - | (134,571) | 3,219,306 | 4,061,249 | (841,943) |
| Total | $ 5,333,430 | $ 2,592,779 | $ 9,459,232 | $ 887,287 | $ 18,272,728 | $ 17,257,956 | $ 1,014,772 |

As of the close of the current fiscal year, the City's governmental funds reported combined ending fund balances shown above. Additional information on the City's fund balances can be found in Note 1 starting on page 63 of this report.

The *General fund* is the chief operating fund of the City. At the end of the current year, the fund balance of the General fund is shown in the table above. As a measure of the General fund's liquidity, it may be useful to compare unassigned fund balance to total fund expenditures. The total unassigned fund balance as a percent of total fund expenditures is shown in the chart below along with total fund balance as a percent of total expenditures.

| | Current Year Ending Balance | Prior Year Ending Balance | Increase/ (Decrease) |
|---|---|---|---|
| General Fund Fund Balances | | | |
| Nonspendable | $ 489,849 | $ 378,547 | $ 111,302 |
| Restricted | 1,489,704 | 536,325 | 953,379 |
| Unassigned | 3,353,877 | 4,454,940 | (1,101,063) |
| Total | $ 5,333,430 | $ 5,369,812 | $ (36,382) |
| General Fund expenditures | $ 7,528,132 | $ 8,000,626 | |
| Unassigned as a percent of expenditures | 44.6% | 55.7% | |
| Total Fund Balance as a percent of expenditures | 70.8% | 67.1% | |

The fund balance of the City's General fund decreased during the current fiscal year as shown in the table above. The decrease in fund balance was due to transfers out in excess of budget to close inactive funds.

Other major governmental fund analysis is shown below:

| Major Funds | Fund Balance 2024 | Fund Balance 2023 | Increase (Decrease) |
|---|---|---|---|
| ***Debt Service*** | $ 2,592,779 | $ 2,436,816 | $ 155,963 |
| The increase in fund balance of the Debt Service funds is due to increased transfers in to close inactive funds. | | | |
| ***Capital Projects*** | $ 9,459,232 | $ 8,936,552 | $ 522,680 |
| The increase in fund balance of the Capital Projects funds is due to increased State aid and park dedication fees in the current year. | | | |

***Proprietary Funds.*** The City's proprietary funds provide the same type of information found in the government-wide financial statements, but in more detail. Net position of the City's proprietary funds increased or (decreased) as follows:

| | Net Position 2024 | Net Position 2023 | Increase/ (Decrease) |
|---|---|---|---|
| Sewer | $ 14,101,651 | $ 12,051,829 | $ 2,049,822 |
| *The increase primarily is attributed to an increase in capital contributions related to connection charges.* | | | |
| Municipal Liquor | $ 523,504 | $ 547,907 | $ (24,403) |
| *The decrease primarily relates to an increase in personnel services.* | | | |
| Storm Sewer | $ 6,467,061 | $ 6,314,657 | $ 152,404 |
| *The increase primarily is attributed to a decrease in personnel services.* | | | |
| Water | $ 17,004,602 | $ 15,652,062 | $ 1,352,540 |
| *The increase primarily is attributed to an increase in capital contributions related to connection charges.* | | | |
| Generation | $ 11,974,349 | $ 11,685,231 | $ 289,118 |
| *The increase primarily relates to increased rate of return on investments resulting in increased interest earnings.* | | | |

**General Fund Budgetary Highlights**

| | Original Budgeted Amounts | Budget Amendments | Final Budgeted Amounts | Actual Amounts | Variance with Final Budget |
|---|---|---|---|---|---|
| Revenues | $ 7,571,902 | $ - | $ 7,571,902 | $ 7,995,718 | $ 423,816 |
| Expenditures | 7,502,975 | - | 7,502,975 | 7,528,132 | (25,157) |
| Excess (Deficiency) of Revenues Over (Under) Expenditures | 68,927 | - | 68,927 | 467,586 | 398,659 |
| Other Financing Sources (Uses) | | | | | |
| Transfers in | 121,800 | - | 121,800 | 209,241 | 87,441 |
| Transfers out | (185,000) | (375,000) | (560,000) | (713,209) | (153,209) |
| Total Other Financing Sources (Uses) | (63,200) | (375,000) | (438,200) | (503,968) | (65,768) |
| Net Change in Fund Balances | 5,727 | (375,000) | (369,273) | (36,382) | 332,891 |
| Fund Balances, January 1 | 5,369,812 | - | 5,369,812 | 5,369,812 | |
| Fund Balances, December 31 | $ 5,375,539 | $ (375,000) | $ 5,000,539 | $ 5,333,430 | $ 332,891 |

The City's General fund budget was amended during the year for an additional transfer to the equipment reserve as shown above. Actual revenues and expenditures were over the final budget amounts as shown above.

**Capital Asset and Debt Administration**

**Capital Assets**. The City's investment in capital assets for its governmental and business-type activities as of December 31, 2024, is shown below in capital asset table (net of accumulated depreciation/amortization). This investment in capital assets includes land, right of ways and easements, buildings and improvements, machinery and equipment, vehicles, and street infrastructure. The total increase in the City's investment in capital assets for the current fiscal year for governmental and business-type activities is due to asset additions in excess of depreciation expense.

Major capital asset events during the current fiscal year included:

- 2024 Street Overlay Project
- Northwoods Park Project
- Main Street Watermain Improvements
- Water Tower Rehabilitation
- Scada Project
- Purchase of Two Mack Plow Trucks
- Purchase of Two Squad Vehicles
- Developer Contributed Assets
    - Meadows North
    - Grand Point
    - Westside Commons

Additional information on the City's capital assets can be found in Note 3D starting on page 70 of this report.

**City of North Branch's Capital Assets**
(Net of Depreciation/Amortization)

| | Governmental Activities | | | Business-type Activities | | |
|---|---|---|---|---|---|---|
| | 2024 | 2023 | Increase (Decrease) | 2024 | 2023 | Increase (Decrease) |
| Land | $ 2,451,297 | $ 2,451,297 | $ - | $ 437,379 | $ 437,379 | $ - |
| Right of Ways and Easements | - | - | - | - | - | - |
| Construction in Progress | 1,651,378 | 1,139,793 | 511,585 | - | 582,457 | (582,457) |
| Buildings and Improvements | 1,427,155 | 1,516,574 | (89,419) | (4,171,871) | (3,142,790) | (1,029,081) |
| Lease Building | - | - | - | 448,733 | 535,584 | (86,851) |
| Machinery and Equipment | 1,563,987 | 1,485,228 | 78,759 | 29,062,164 | 28,899,617 | 162,547 |
| Vehicles | 2,293,555 | 1,795,894 | 497,661 | 18,775,799 | 14,604,021 | 4,171,778 |
| Infrastructure | 31,836,198 | 30,580,459 | 1,255,739 | - | - | - |
| Total | $ 41,223,570 | $ 38,969,245 | $ 2,254,325 | $ 44,552,204 | $ 41,916,268 | $ 2,635,936 |
| Percent Increase (Decrease) | | | 5.8 | | | 6.3 |

**Long-term Debt.** At the end of the current fiscal year, the City had total bonded debt outstanding consisting of special assessment debt, revenue related debt and general obligation debt, finance purchase agreements, loans and leases as noted in the table below.

## City of North Branch's Outstanding Debt

| | Governmental Activities | | | Business-type Activities | | |
|---|---|---|---|---|---|---|
| | 2024 | 2023 | Increase (Decrease) | 2024 | 2023 | Increase (Decrease) |
| General Obligation Bonds | $ 1,075,000 | $ 1,233,000 | $ (158,000) | $ - | $ - | $ - |
| General Obligation Improvement Bonds | 669,000 | 905,000 | (236,000) | - | - | - |
| General Obligation Tax Increment Bonds | 3,240,000 | 3,555,000 | (315,000) | - | - | - |
| General Obligation Revenue Bonds | 2,040,000 | 2,300,000 | (260,000) | 8,036,000 | 9,408,000 | (1,372,000) |
| Unamortized Discount and Premium | 71,056 | 83,753 | (12,697) | 16,035 | 20,678 | (4,643) |
| Finance Purchase Agreement | 341,574 | 390,815 | - | - | - | - |
| Loan Payable from Direct Borrowing | 378,256 | 603,256 | (225,000) | - | - | - |
| Lease Payable | - | - | - | 461,151 | 552,061 | (90,910) |
| Total | $ 7,814,886 | $ 9,070,824 | $ (1,206,697) | $ 8,513,186 | $ 9,980,739 | $ (1,467,553) |
| Percent Increase (Decrease) | | | (13.3) | | | (14.7) |

The City's total bonded long-term debt decreased during the current fiscal year due to regularly scheduled debt service principal payments.

Minnesota statutes limit the amount of net general obligation debt a City may issue to 3 percent of the market value of taxable property within the City. Net debt is debt payable solely from ad valorem taxes. As of December 31. 2024, the City is under the legal debt margin.

Additional information on the City's long-term debt can be found in Note 3F starting on page 77 of this report.

**Economic Factors and Next Year's Budgets and Rates**

The following are key economic factors for the City of North Branch. These factors were considered when preparing the budget for fiscal year ending December 31, 2025.

- The unemployment rate for Chisago County is currently 3.0 percent, which is an increase from a rate of 2.7 percent a year ago. This compares favorably to the State's average unemployment rate of 3.9 percent and the national average rate of 4.2 percent.
- Property valuations within the City remain strong and growing.
- Inflationary trends in the region compare favorably to the national indices.

**Requests for Information**

This financial report is designed to provide a general overview of the City's finances for all those with an interest in the City's finances. Questions concerning any of the information provided in this report or requests for additional financial information should be addressed to the Finance Director, PO Box 910, North Branch, Minnesota 55056.

THIS PAGE IS LEFT

BLANK INTENTIONALLY

# GOVERNMENT-WIDE FINANCIAL STATEMENTS

CITY OF NORTH BRANCH
NORTH BRANCH, MINNESOTA

FOR THE YEAR ENDED
DECEMBER 31, 2024

THIS PAGE IS LEFT

BLANK INTENTIONALLY

# City of North Branch, Minnesota
## Statement of Net Position
December 31, 2024

| | Governmental Activities | Business-type Activities | Total |
|---|---|---|---|
| Assets | | | |
| Cash and investments | $ 10,253,978 | $ 13,055,945 | $ 23,309,923 |
| Restricted cash | - | 986,350 | 986,350 |
| Receivables | | | |
| Accounts | 141,158 | 537,176 | 678,334 |
| Accrued interest | 38,917 | 52,226 | 91,143 |
| Taxes | 235,138 | - | 235,138 |
| Leases | - | 518,981 | 518,981 |
| Special assessments | 426,729 | 67,967 | 494,696 |
| Inventories | - | 632,854 | 632,854 |
| Prepaid items | 489,849 | 33,305 | 523,154 |
| Pension asset | 376,094 | - | 376,094 |
| Assets held for resale | 8,256,308 | - | 8,256,308 |
| Capital assets | | | |
| Land and construction in progress | 4,102,675 | 437,379 | 4,540,054 |
| Lease building - net of amortization | - | 448,733 | 448,733 |
| Depreciable assets (net of accumulated depreciation) | 37,120,895 | 43,666,092 | 80,786,987 |
| Total Assets | 61,441,741 | 60,437,008 | 121,878,749 |
| Deferred Outflows of Resources | | | |
| Deferred pension resources | 2,683,742 | 83,182 | 2,766,924 |
| Deferred other postemployment benefit resources | 25,373 | 7,818 | 33,191 |
| Total Deferred Outflows of Resources | 2,709,115 | 91,000 | 2,800,115 |
| Liabilities | | | |
| Accounts and contracts payable | 213,430 | 336,218 | 549,648 |
| Accrued salaries and withholdings payable | 227,274 | 75,153 | 302,427 |
| Accrued interest payable | 80,440 | 81,211 | 161,651 |
| Due to other governments | 1,420 | 52,682 | 54,102 |
| Deposits payable | 106,562 | 503 | 107,065 |
| Unearned revenue | 406,159 | 14,000 | 420,159 |
| Noncurrent liabilities | | | |
| Due within one year | | | |
| Long-term liabilities | 1,299,118 | 1,267,889 | 2,567,007 |
| Due in more than one year | | | |
| Long-term liabilities | 6,832,088 | 7,351,543 | 14,183,631 |
| Other postemployment benefits liability | 157,593 | 48,549 | 206,142 |
| Net pension liability | 2,221,727 | 412,523 | 2,634,250 |
| Total Liabilities | 11,545,811 | 9,640,271 | 21,186,082 |
| Deferred Inflows of Resources | | | |
| Deferred pension resources | 3,028,512 | 319,162 | 3,347,674 |
| Deferred other postemployment benefit resources | 9,937 | 3,061 | 12,998 |
| Deferred lease resources | - | 494,347 | 494,347 |
| Total Deferred Inflows of Resources | 3,038,449 | 816,570 | 3,855,019 |
| Net Position | | | |
| Net investment in capital assets | 33,775,618 | 36,039,018 | 69,814,636 |
| Restricted for | | | |
| Capital projects | 66,000 | - | 66,000 |
| Economic development | 610,605 | - | 610,605 |
| Fire capital | 193,228 | - | 193,228 |
| Fire relief pension | 376,094 | - | 376,094 |
| Public safety | 249,846 | - | 249,846 |
| Debt service | 4,949,343 | 986,350 | 5,935,693 |
| Unrestricted | 9,345,862 | 13,045,799 | 22,391,661 |
| Total Net Position | $ 49,566,596 | $ 50,071,167 | $ 99,637,763 |

The notes to the financial statements are an integral part of this statement.

# City of North Branch, Minnesota
## Statement of Activities
For the Year Ended December 31, 2024

| Functions/Programs | Expenses | Program Revenues: Charges For Services | Program Revenues: Operating Grants and Contributions | Program Revenues: Capital Grants and Contributions |
|---|---|---|---|---|
| Primary Government | | | | |
| Governmental activities | | | | |
| General government | $ 1,561,708 | $ 608,731 | $ - | $ - |
| Public safety | 3,837,341 | 29,581 | 325,743 | 101,037 |
| Public works | 2,697,873 | 24,945 | 1,249,384 | 1,429,582 |
| Culture and recreation | 547,470 | 126,427 | 12,310 | 60,000 |
| Economic development | 183,842 | 10,392 | - | - |
| Interest on long-term debt | 217,049 | - | 115,550 | - |
| Total Governmental Activities | 9,045,283 | 800,076 | 1,702,987 | 1,590,619 |
| Business-type Activities | | | | |
| Sewer | 1,733,708 | 2,324,314 | - | 1,354,770 |
| Municipal liquor | 1,094,282 | 1,136,025 | - | - |
| Storm water | 599,673 | 498,261 | - | 228,210 |
| Water | 1,929,564 | 2,206,449 | - | 1,018,430 |
| Generation | 351,674 | 362,005 | - | - |
| Total Business-type Activities | 5,708,901 | 6,527,054 | - | 2,601,410 |
| Total Governmental and Business-type Activities | $ 14,754,184 | $ 7,327,130 | $ 1,702,987 | $ 4,192,029 |

General Revenues
- Taxes
  - Property taxes, levied for general purposes
  - Property taxes, levied for debt service
  - Tax increments
  - Franchise taxes
  - Other taxes
- Grants and contributions not restricted to specific programs
- Unrestricted investment earnings
- Other general revenues
- Gain on sale of capital assets

Transfers - Internal Activities

Total General Revenues and Transfers

Change in Net Position

Net Position - January 1

Net Position - December 31

The notes to the financial statements are an integral part of this statement.

| Net (Expenses) Revenues and Changes in Net Position | | |
|---|---|---|
| Governmental Activities | Business-Type Activities | Total |
| $ (952,977) | $ - | $ (952,977) |
| (3,380,980) | - | (3,380,980) |
| 6,038 | - | 6,038 |
| (348,733) | - | (348,733) |
| (173,450) | - | (173,450) |
| (101,499) | - | (101,499) |
| (4,951,601) | - | (4,951,601) |
| - | 1,945,376 | 1,945,376 |
| - | 41,743 | 41,743 |
| - | 126,798 | 126,798 |
| - | 1,295,315 | 1,295,315 |
| - | 10,331 | 10,331 |
| - | 3,419,563 | 3,419,563 |
| (4,951,601) | 3,419,563 | (1,532,038) |
| 6,243,021 | - | 6,243,021 |
| 190,711 | - | 190,711 |
| 563,053 | - | 563,053 |
| 355,086 | - | 355,086 |
| 26,475 | - | 26,475 |
| 1,141,961 | - | 1,141,961 |
| 288,249 | 485,125 | 773,374 |
| 153,327 | 24,956 | 178,283 |
| - | 9,100 | 9,100 |
| 119,263 | (119,263) | - |
| 9,081,146 | 399,918 | 9,481,064 |
| 4,129,545 | 3,819,481 | 7,949,026 |
| 45,437,051 | 46,251,686 | 91,688,737 |
| $ 49,566,596 | $ 50,071,167 | $ 99,637,763 |

The notes to the financial statements are an integral part of this statement.

THIS PAGE IS LEFT

BLANK INTENTIONALLY

# FUND FINANCIAL STATEMENTS

CITY OF NORTH BRANCH
NORTH BRANCH, MINNESOTA

FOR THE YEAR ENDED
DECEMBER 31, 2024

City of North Branch, Minnesota
Balance Sheet
Governmental Funds
December 31, 2024

| | General | Debt Service | Capital Projects | Other Governmental Funds | Total |
|---|---|---|---|---|---|
| Assets | | | | | |
| Cash and investments | $ 4,871,715 | $ 2,583,191 | $ 1,998,631 | $ 800,441 | $ 10,253,978 |
| Receivables | | | | | |
| Accrued interest | 15,796 | 7,703 | 9,422 | 5,996 | 38,917 |
| Accounts receivable | 21,840 | - | 89,454 | 29,864 | 141,158 |
| Taxes | 193,796 | 10,329 | 7,973 | 23,040 | 235,138 |
| Special assessments | 16 | 388,560 | 38,153 | - | 426,729 |
| Due from other funds | 411,720 | - | - | - | 411,720 |
| Prepaid items | 489,849 | - | - | - | 489,849 |
| Assets held for resale | - | - | 7,791,181 | 465,127 | 8,256,308 |
| Total Assets | $ 6,004,732 | $ 2,989,783 | $ 9,934,814 | $ 1,324,468 | $ 20,253,797 |
| Liabilities | | | | | |
| Accounts payable | $ 186,608 | $ - | $ 25,105 | $ 1,717 | $ 213,430 |
| Accrued salaries and withholdings payable | 226,482 | - | - | 792 | 227,274 |
| Due to other governments | 1,420 | - | - | - | 1,420 |
| Due to other funds | - | - | - | 411,720 | 411,720 |
| Deposits payable | 106,562 | - | - | - | 106,562 |
| Unearned revenue | - | - | 406,159 | - | 406,159 |
| Total Liabilities | 521,072 | - | 431,264 | 414,229 | 1,366,565 |
| Deferred Inflows of Resources | | | | | |
| Unavailable revenue - property taxes | 150,214 | 8,444 | 6,165 | 11,488 | 176,311 |
| Unavailable revenue - other | - | - | - | 11,464 | 11,464 |
| Unavailable revenue - special assessments | 16 | 388,560 | 38,153 | - | 426,729 |
| Deferred intergovernmental resources | - | - | - | - | - |
| Total Deferred Inflows of Resources | 150,230 | 397,004 | 44,318 | 22,952 | 614,504 |
| Fund Balances | | | | | |
| Nonspendable | 489,849 | - | - | - | 489,849 |
| Restricted | 349,704 | 2,592,779 | 2,106,000 | 703,975 | 5,752,458 |
| Committed | 1,140,000 | - | 175,000 | 317,883 | 1,632,883 |
| Assigned | - | - | 7,178,232 | - | 7,178,232 |
| Unassigned | 3,353,877 | - | - | (134,571) | 3,219,306 |
| Total Fund Balances | 5,333,430 | 2,592,779 | 9,459,232 | 887,287 | 18,272,728 |
| Total Liabilities, Deferred Inflows of Resources and Fund Balances | $ 6,004,732 | $ 2,989,783 | $ 9,934,814 | $ 1,324,468 | $ 20,253,797 |

The notes to the financial statements are an integral part of this statement.

# City of North Branch, Minnesota

Reconciliation of the Balance Sheet
to the Statement of Net Position
Governmental Funds
December 31, 2024

Amounts reported for governmental activities in the statement of net position are different because

| | |
|---|---|
| Total Fund Balances - Governmental | $ 18,272,728 |
| Long-term assets from pensions reported in governmental activities are not financial resources and therefore are not reported as assets in the funds. | 376,094 |
| Capital assets used in governmental activities are not financial resources and, therefore, are not reported in the funds. | |
| Cost of capital assets | 63,746,515 |
| Less accumulated depreciation | (22,522,945) |
| Noncurrent liabilities, including bonds payable, are not due and payable in the current period and therefore are not reported as liabilities in the funds. Noncurrent liabilities at year-end consist of | |
| Bonds payable | (7,402,256) |
| Unamortized bond premium and discount | (71,056) |
| Financed purchase | (341,574) |
| Compensated absences payable | (316,320) |
| Net pension liability | (2,221,727) |
| Other postemployment benefit liability | (157,593) |
| Some receivables are not available soon enough to pay for the current period's expenditures, and therefore are reported as unavailable revenue in the funds. | |
| Property taxes | 176,311 |
| Special assessments | 426,729 |
| Other revenue | 11,464 |
| Governmental fund do not report a liability for accrued interest until due and payable. | (80,440) |
| Governmental funds do not report long-term amounts related to pensions and other postemployment benefits. | |
| Deferred outflows of pension resources | 2,683,742 |
| Deferred inflows of pension resources | (3,028,512) |
| Deferred outflows of other postemployment benefit resources | 25,373 |
| Deferred inflows of other postemployment benefit resources | (9,937) |
| Total Net Position - Governmental Activities | $ 49,566,596 |

The notes to the financial statements are an integral part of this statement.

# City of North Branch, Minnesota

Statement of Revenues, Expenditures and
Changes in Fund Balances
Governmental Funds
For the Year Ended December 31, 2024

| | General | Debt Service | Capital Projects | Other Governmental Funds | Total |
|---|---|---|---|---|---|
| Revenues | | | | | |
| Taxes | $ 5,426,450 | $ 550,327 | $ 578,821 | $ 770,225 | $ 7,325,823 |
| Licenses and permits | 437,683 | - | - | - | 437,683 |
| Intergovernmental | 1,691,303 | 115,550 | 1,087,493 | 1,185 | 2,895,531 |
| Charges for services | 180,541 | - | 124,606 | 3,600 | 308,747 |
| Fines and forfeits | 24,796 | - | - | - | 24,796 |
| Special assessments | 7,834 | 157,901 | 8,220 | - | 173,955 |
| Investment earnings | 131,527 | 55,960 | 67,435 | 33,327 | 288,249 |
| Miscellaneous | 95,584 | - | 271,074 | 122,892 | 489,550 |
| Total Revenues | 7,995,718 | 879,738 | 2,137,649 | 931,229 | 11,944,334 |
| Expenditures | | | | | |
| Current | | | | | |
| General government | 1,372,036 | - | 29,136 | - | 1,401,172 |
| Public safety | 3,609,478 | - | - | 22,297 | 3,631,775 |
| Public works | 1,828,683 | - | - | - | 1,828,683 |
| Culture and recreation | 397,503 | - | 62,054 | - | 459,557 |
| Economic development | - | - | - | 170,518 | 170,518 |
| Capital outlay | | | | | |
| Public safety | 214,869 | - | - | - | 214,869 |
| Public works | 40,064 | - | 1,498,516 | - | 1,538,580 |
| Culture and recreation | - | - | 313,247 | - | 313,247 |
| Debt service | | | | | |
| Principal | 49,241 | 969,000 | 225,000 | - | 1,243,241 |
| Interest and other charges | 16,258 | 230,624 | 301 | - | 247,183 |
| Total Expenditures | 7,528,132 | 1,199,624 | 2,128,254 | 192,815 | 11,048,825 |
| Excess (Deficiency) of Revenues Over (Under) Expenditures | 467,586 | (319,886) | 9,395 | 738,414 | 895,509 |
| Other Financing Sources (Uses) | | | | | |
| Transfers in | 209,241 | 475,849 | 523,939 | 185,000 | 1,394,029 |
| Transfers out | (713,209) | - | (10,654) | (550,903) | (1,274,766) |
| Total Other Financing Sources (Uses) | (503,968) | 475,849 | 513,285 | (365,903) | 119,263 |
| Net Changes in Fund Balances | (36,382) | 155,963 | 522,680 | 372,511 | 1,014,772 |
| Fund Balances, January 1 | 5,369,812 | 2,436,816 | 8,936,552 | 514,776 | 17,257,956 |
| Fund Balances, December 31 | $ 5,333,430 | $ 2,592,779 | $ 9,459,232 | $ 887,287 | $ 18,272,728 |

The notes to the financial statements are an integral part of this statement.

# City of North Branch, Minnesota

Reconciliation of the Statement of Revenues,
Expenditures, and Changes in Fund Balances of
Governmental Funds to the Statement of Activities
Governmental Funds
For the Year Ended December 31, 2024

Amounts reported for governmental activities in the statement of activities are different because

| | |
|---|---|
| Net Changes in Fund Balances - Total Governmental Funds | $ 1,014,772 |
| Capital outlays are reported in governmental funds as expenditures. However, in the statement of activities, the cost of those assets is allocated over the estimated useful lives as depreciation expense. | |
| Depreciation | (1,635,115) |
| Capital outlay | 2,601,950 |
| Revenues in the statement of activities that do not provide current financial resources are not reported as revenue in the funds. | |
| Capital assets contributed from developers | 1,287,490 |
| Certain revenues are recognized as soon as they are earned. Under the modified accrual basis of accounting certain revenues cannot be recognized until they are available to liquidate liabilities of the current period. | |
| Property taxes | 52,523 |
| Special assessments | (223,835) |
| Intergovernmental | (74,100) |
| The issuance of long-term debt provides current financial resources to governmental funds, while the repayment of principal of long-term debt consumes the current financial resources of governmental funds. Neither transaction, however, has any effect on net position. Also, governmental funds report the effect of premiums, discounts and similar items when debt is first issued, whereas these amounts are delayed and amortized in the statement of activities. | |
| Debt issuance discounts amortization | 12,697 |
| Principal repayments | 1,194,000 |
| Financed purchase repayments | 49,241 |
| Long-term pension activity is not reported in governmental funds. | |
| Pension expense | (75,662) |
| Pension revenue | 69,153 |
| Interest on long-term debt in the statement of activities differs from the amount reported in the governmental funds because interest is recognized as an expenditures in the funds when it is due, and this requires the use of current financial resources. In the statement of activities, however, interest expense is recognized as the interest accrues, regardless of when it is due. | 17,437 |
| Some expenses reported in the statement of activities do not require the use of current financial resources and, therefore, are not reported as expenditures in governmental funds. | |
| Compensated absences | (18,849) |
| Other post employment benefits | (142,157) |
| Change in Net Position - Governmental Activities | $ 4,129,545 |

The notes to the financial statements are an integral part of this statement.

THIS PAGE IS LEFT

BLANK INTENTIONALLY

# City of North Branch, Minnesota

Statement of Revenues, Expenditures and Changes in Fund Balances -
Budget and Actual
General Fund
For the Year Ended December 31, 2024

| | Budgeted Amounts | | Actual | Variance with |
|---|---|---|---|---|
| | Original | Final | Amounts | Final Budget |
| Revenues | | | | |
| Taxes | $ 5,506,000 | $ 5,506,000 | $ 5,426,450 | $ (79,550) |
| Licenses and permits | 336,500 | 336,500 | 437,683 | 101,183 |
| Intergovernmental | 1,449,202 | 1,449,202 | 1,691,303 | 242,101 |
| Charges for services | 148,700 | 148,700 | 180,541 | 31,841 |
| Fines and forfeits | 17,000 | 17,000 | 24,796 | 7,796 |
| Special assessments | 2,000 | 2,000 | 7,834 | 5,834 |
| Investment earnings | 15,000 | 15,000 | 131,527 | 116,527 |
| Miscellaneous | 97,500 | 97,500 | 95,584 | (1,916) |
| Total Revenues | 7,571,902 | 7,571,902 | 7,995,718 | 423,816 |
| Expenditures | | | | |
| Current | | | | |
| General government | 1,382,414 | 1,382,414 | 1,372,036 | 10,378 |
| Public safety | 3,528,320 | 3,528,320 | 3,609,478 | (81,158) |
| Public works | 1,846,703 | 1,846,703 | 1,828,683 | 18,020 |
| Culture and recreation | 533,539 | 533,539 | 397,503 | 136,036 |
| Capital outlay | | | | |
| Public safety | 60,500 | 60,500 | 214,869 | (154,369) |
| Public works | 86,000 | 86,000 | 40,064 | 45,936 |
| Debt service | | | | |
| Principal | 49,241 | 49,241 | 49,241 | - |
| Interest and other charges | 16,258 | 16,258 | 16,258 | - |
| | 7,502,975 | 7,502,975 | 7,528,132 | (25,157) |
| Excess (Deficiency) of Revenues Over (Under) Expenditures | 68,927 | 68,927 | 467,586 | 398,659 |
| Other Financing Sources (Uses) | | | | |
| Transfers in | 121,800 | 121,800 | 209,241 | (87,441) |
| Transfers out | (185,000) | (560,000) | (713,209) | 153,209 |
| Total Other Financing Sources (Uses) | (63,200) | (438,200) | (503,968) | 65,768 |
| Net Change in Fund Balances | 5,727 | (369,273) | (36,382) | 332,891 |
| Fund Balances, January 1 | 5,369,812 | 5,369,812 | 5,369,812 | - |
| Fund Balances, December 31 | $ 5,375,539 | $ 5,000,539 | $ 5,333,430 | $ 332,891 |

The notes to the financial statements are an integral part of this statement.

# City of North Branch, Minnesota
Statement of Net Position
Proprietary Funds
December 31, 2024

| | Business-Type Activities - Enterprise Funds | | |
|---|---|---|---|
| | **602** | **609** | **612** |
| Assets | Sewer | Municipal Liquor | Storm Sewer |
| Current Assets | | | |
| Cash and investments | $ 3,982,728 | $ 268,897 | $ 771,957 |
| Restricted cash and investments | - | - | - |
| Receivables | | | |
| Accrued interest | 12,074 | 554 | 2,901 |
| Accounts | 276,615 | 143 | 36,867 |
| Special assessments - current | - | - | 2,253 |
| Special assessments - delinquent | 130 | - | 10,489 |
| Special assessments - deferred | 3,665 | - | 47,985 |
| Leases | - | - | - |
| Inventories | - | 545,712 | - |
| Prepaid items | - | 40 | - |
| Total Current Assets | 4,275,212 | 815,346 | 872,452 |
| Noncurrent Assets | | | |
| Leases receivable | - | - | - |
| Capital assets | | | |
| Land | 40,000 | 28,000 | 286,454 |
| Buildings and structures | 13,729,287 | 1,488,425 | - |
| Infrastructure | 14,373,333 | - | 10,824,842 |
| Machinery and equipment | 282,534 | 116,421 | 624,506 |
| Total Capital Assets | 28,425,154 | 1,632,846 | 11,735,802 |
| Less Accumulated Depreciation and Amortization | (13,640,964) | (827,493) | (5,495,882) |
| Net Capital Assets | 14,784,190 | 805,353 | 6,239,920 |
| Total Noncurrent Assets | 14,784,190 | 805,353 | 6,239,920 |
| Total Assets | 19,059,402 | 1,620,699 | 7,112,372 |
| Deferred Outflows of Resources | | | |
| Deferred pension resources | - | 71,288 | - |
| Deferred other postemployment benefit resources | 2,231 | 1,643 | 1,251 |
| Total Deferred Inflows of Pension Resources | 2,231 | 72,931 | 1,251 |

The notes to the financial statements are an integral part of this statement.

| Business-Type Activities - Enterprise Funds | | |
|---|---|---|
| **615** Water | **620** Generation | Totals |
| $ 366,536 | $ 7,665,827 | $ 13,055,945 |
| 986,350 | - | 986,350 |
| 36,697 | - | 52,226 |
| 223,070 | 481 | 537,176 |
| - | - | 2,253 |
| 205 | 61 | 10,885 |
| 3,179 | - | 54,829 |
| 28,196 | - | 28,196 |
| 87,142 | - | 632,854 |
| - | 33,265 | 33,305 |
| 1,731,375 | 7,699,634 | 15,394,019 |
| 490,785 | - | 490,785 |
| 82,925 | - | 437,379 |
| 26,617 | - | 15,244,329 |
| 5,308,013 | - | 30,506,188 |
| 24,252,361 | 6,450,814 | 31,726,636 |
| 29,669,916 | 6,450,814 | 77,914,532 |
| (11,261,476) | (2,136,513) | (33,362,328) |
| 18,408,440 | 4,314,301 | 44,552,204 |
| 18,899,225 | 4,314,301 | 45,042,989 |
| 20,630,600 | 12,013,935 | 60,437,008 |
| 11,493 | 401 | 83,182 |
| 2,548 | 145 | 7,818 |
| 14,041 | 546 | 91,000 |

The notes to the financial statements are an integral part of this statement.

# City of North Branch, Minnesota
Statement of Net Position (Continued)
Proprietary Funds
December 31, 2024

| | Business-Type Activities - Enterprise Funds | | |
|---|---|---|---|
| | **602** Sewer | **609** Municipal Liquor | **612** Storm Sewer |
| Liabilities | | | |
| Current Liabilities | | | |
| Accounts payable | $ 33,544 | $ 131,174 | $ 16,735 |
| Accrued salaries and withholdings payable | 17,499 | 29,273 | 9,217 |
| Due to other governments | - | 44,832 | - |
| Accrued interest payable | 44,529 | - | 4,355 |
| Deposits payable | - | 90 | - |
| Unearned revenue | - | - | 14,000 |
| Bonds payable - current | 505,000 | - | 65,000 |
| Lease payable - current | - | 86,574 | - |
| Compensated absences payable - current | 3,686 | 6,919 | 2,979 |
| Total Current Liabilities | 604,258 | 298,862 | 112,286 |
| Noncurrent Liabilities | | | |
| Bonds payable | 4,243,579 | - | 467,456 |
| Compensated absences payable | 19,367 | 33,406 | 13,021 |
| Lease payable | - | 374,577 | - |
| Net pension liability | 24,361 | 287,512 | 15,074 |
| Other postemployment benefits payable | 13,853 | 10,203 | 7,770 |
| Total Noncurrent Liabilities | 4,301,160 | 705,698 | 503,321 |
| Total Liabilities | 4,905,418 | 1,004,560 | 615,607 |
| Deferred Inflows of Resources | | | |
| Deferred pension resources | 53,691 | 164,923 | 30,465 |
| Deferred other postemployment benefit resources | 873 | 643 | 490 |
| Deferred lease resources | - | - | - |
| Total Deferred Outflows of Pension Resources | 54,564 | 165,566 | 30,955 |
| Net Position | | | |
| Net investment in capital assets | 10,035,611 | 344,202 | 5,707,464 |
| Restricted for debt service | - | - | - |
| Unrestricted | 4,066,040 | 179,302 | 759,597 |
| Total Net Position | $ 14,101,651 | $ 523,504 | $ 6,467,061 |

The notes to the financial statements are an integral part of this statement.

| Business-Type Activities - Enterprise Funds | | |
|---|---|---|
| **615** Water | **620** Generation | Totals |
| $ 132,874 | $ 21,891 | $ 336,218 |
| 16,040 | 3,124 | 75,153 |
| 7,850 | - | 52,682 |
| 32,327 | - | 81,211 |
| - | 413 | 503 |
| - | - | 14,000 |
| 594,000 | - | 1,164,000 |
| - | - | 86,574 |
| 3,354 | 377 | 17,315 |
| 786,445 | 25,805 | 1,827,656 |
| 2,177,000 | - | 6,888,035 |
| 21,438 | 1,699 | 88,931 |
| - | - | 374,577 |
| 79,678 | 5,898 | 412,523 |
| 15,824 | 899 | 48,549 |
| 2,293,940 | 8,496 | 7,812,615 |
| 3,080,385 | 34,301 | 9,640,271 |
| 64,309 | 5,774 | 319,162 |
| 998 | 57 | 3,061 |
| 494,347 | - | 494,347 |
| 559,654 | 5,831 | 816,570 |
| 15,637,440 | 4,314,301 | 36,039,018 |
| 986,350 | - | 986,350 |
| 380,812 | 7,660,048 | 13,045,799 |
| $ 17,004,602 | $ 11,974,349 | $ 50,071,167 |

The notes to the financial statements are an integral part of this statement.

# City of North Branch, Minnesota
Statement of Revenues, Expenses and
Changes in Net Position
Proprietary Funds
For the Year Ended December 31, 2024

| | Business-Type Activities - Enterprise Funds | | |
|---|---|---|---|
| | **602** Sewer | **609** Municipal Liquor | **612** Storm Sewer |
| Operating Revenues | | | |
| Sales | $ - | $ 4,111,520 | $ - |
| Cost of sales | - | (2,977,374) | - |
| Gross Profit | - | 1,134,146 | - |
| Charges for services | 2,323,908 | - | 486,247 |
| Total Operating Revenues | 2,323,908 | 1,134,146 | 486,247 |
| Operating Expenses | | | |
| Personnel services | 314,693 | 756,256 | 186,791 |
| Professional services | 220,642 | 34,516 | 57,804 |
| Utilities | 126,786 | 24,423 | - |
| Depreciation and amortization | 661,531 | 124,763 | 310,676 |
| Repairs and maintenance | 152,126 | 36,338 | 25,357 |
| Insurance | 25,061 | 11,303 | - |
| Office and other supplies | 104,739 | 25,204 | 9,704 |
| Miscellaneous | - | 81,479 | - |
| Total Operating Expenses | 1,605,578 | 1,094,282 | 590,332 |
| Operating Income (Loss) | 718,330 | 39,864 | (104,085) |
| Nonoperating Revenues (Expenses) | | | |
| Lease revenue | - | - | - |
| Investment earnings | 98,343 | 4,103 | 22,196 |
| Interest and other charges | (128,130) | - | (9,341) |
| Gain on disposal of capital assets | - | - | - |
| Miscellaneous revenue | 6,509 | 11,630 | 15,424 |
| Total Nonoperating Revenues (Expenses) | (23,278) | 15,733 | 28,279 |
| Income (Loss) Before Contributions and Transfers | 695,052 | 55,597 | (75,806) |
| Capital Contributions | 1,354,770 | - | 228,210 |
| Transfers Out | - | (80,000) | - |
| Change in Net Position | 2,049,822 | (24,403) | 152,404 |
| Net Position, January 1 | 12,051,829 | 547,907 | 6,314,657 |
| Net Position, December 31 | $ 14,101,651 | $ 523,504 | $ 6,467,061 |

The notes to the financial statements are an integral part of this statement.

| Business-Type Activities - Enterprise Funds | | |
|---|---|---|
| **615** Water | **620** Generation | Totals |
| $ - | $ - | $ 4,111,520 |
| - | - | (2,977,374) |
| - | - | 1,134,146 |
| 2,128,447 | 360,759 | 5,299,361 |
| 2,128,447 | 360,759 | 6,433,507 |
| 332,922 | 10,838 | 1,601,500 |
| 312,592 | 43,800 | 669,354 |
| - | 26,572 | 177,781 |
| 759,220 | 215,187 | 2,071,377 |
| 109,706 | 48,710 | 372,237 |
| - | - | 36,364 |
| 327,294 | 5,851 | 472,792 |
| 35 | 116 | 81,630 |
| 1,841,769 | 351,074 | 5,483,035 |
| 286,678 | 9,685 | 950,472 |
| 43,058 | - | 43,058 |
| 82,214 | 278,269 | 485,125 |
| (87,795) | (600) | (225,866) |
| 9,100 | - | 9,100 |
| 40,118 | 1,764 | 75,445 |
| 86,695 | 279,433 | 386,862 |
| 373,373 | 289,118 | 1,337,334 |
| 1,018,430 | - | 2,601,410 |
| (39,263) | - | (119,263) |
| 1,352,540 | 289,118 | 3,819,481 |
| 15,652,062 | 11,685,231 | 46,251,686 |
| $ 17,004,602 | $ 11,974,349 | $ 50,071,167 |

The notes to the financial statements are an integral part of this statement.

# City of North Branch, Minnesota
Statement of Cash Flows
Proprietary Funds
For the Year Ended December 31, 2024

| | Business-Type Activities - Enterprise Funds | | |
|---|---|---|---|
| | **602** Sewer | **609** Municipal Liquor | **612** Storm Sewer |
| Cash Flows from Operating Activities | | | |
| Receipts from customers and users | $ 2,294,040 | $ 4,129,502 | $ 584,637 |
| Payment to suppliers | (614,482) | (3,177,937) | (192,946) |
| Payment to employees | (446,685) | (688,953) | (254,951) |
| Other operating receipts | 6,509 | 11,630 | 15,424 |
| Net Cash Provided (Used) by Operating Activities | 1,239,382 | 274,242 | 152,164 |
| Cash Flows from Noncapital Financing Activities | | | |
| Lease receipts | - | - | - |
| Intergovernmental receipts | - | - | 14,000 |
| Transfers out | - | (80,000) | - |
| Net Cash Provided (Used) by Noncapital Financing Activities | - | (80,000) | 14,000 |
| Cash Flows from Capital and Related Financing Activities | | | |
| Acquisition of capital assets | (26,735) | - | - |
| Proceeds from the sale of assets | - | - | - |
| Lease payments | - | (90,910) | - |
| Connection charges | 272,409 | - | - |
| Principal paid on debt | (690,000) | - | (60,000) |
| Interest paid on debt | (140,130) | - | (11,048) |
| Net Cash Flows Provided (Used) by Capital and Related Financing Activities | (584,456) | (90,910) | (71,048) |
| Cash Flows from Investing Activities | | | |
| Investment interest | 99,383 | 4,204 | 21,995 |
| Net Increase (Decrease) in Cash and Cash Equivalents | 754,309 | 107,536 | 117,111 |
| Cash and Cash Equivalents, January 1 | 3,228,419 | 161,361 | 654,846 |
| Cash and Cash Equivalents, December 31 | $ 3,982,728 | $ 268,897 | $ 771,957 |
| Reconciliation of Cash and Cash Equivalents | | | |
| Unrestricted | $ 3,982,728 | $ 268,897 | $ 771,957 |
| Restricted | - | - | - |
| Total Cash and Cash Equivalents | $ 3,982,728 | $ 268,897 | $ 771,957 |

The notes to the financial statements are an integral part of this statement.

| Business-Type Activities - Enterprise Funds | | |
|---|---|---|
| **615** Water | **620** Generation | Totals |
| $ 2,285,845 | $ 362,469 | $ 9,656,493 |
| (870,429) | (146,318) | (5,002,112) |
| (449,504) | (30,804) | (1,870,897) |
| 40,118 | 1,764 | 75,445 |
| 1,006,030 | 187,111 | 2,858,929 |
| 36,201 | - | 36,201 |
| - | - | 14,000 |
| (39,263) | - | (119,263) |
| (3,062) | - | (69,062) |
| (3,387,589) | (267,928) | (3,682,252) |
| 9,100 | - | 9,100 |
| - | - | (90,910) |
| 554,315 | - | 826,724 |
| (622,000) | - | (1,372,000) |
| (95,053) | (600) | (246,831) |
| (3,541,227) | (268,528) | (4,556,169) |
| 99,722 | 278,269 | 503,573 |
| (2,438,537) | 196,852 | (1,262,729) |
| 3,791,423 | 7,468,975 | 15,305,024 |
| $ 1,352,886 | $ 7,665,827 | $ 14,042,295 |
| $ 366,536 | $ 7,665,827 | $ 13,055,945 |
| 986,350 | - | 986,350 |
| $ 1,352,886 | $ 7,665,827 | $ 14,042,295 |

The notes to the financial statements are an integral part of this statement.

# City of North Branch, Minnesota
Statement of Cash Flows (Continued)
Proprietary Funds
For the Year Ended December 31, 2024

| | Business-Type Activities - Enterprise Funds | | |
|---|---|---|---|
| | **602** Sewer | **609** Municipal Liquor | **612** Storm Sewer |
| Reconciliation of Operating Income (Loss) to Net Cash Provided (Used) by Operating Activities | | | |
| Operating income (loss) | $ 718,330 | $ 39,864 | $ (104,085) |
| Adjustments to reconcile operating income (loss) to net cash provided (used) by operating activities | | | |
| Miscellaneous revenues | 6,509 | 11,630 | 15,424 |
| Depreciation and amortization | 661,531 | 124,763 | 310,676 |
| (Increase) decrease in assets and deferred outflows of resources | | | |
| Accounts receivable | (53,167) | (85) | (3,349) |
| Due from other governments | - | - | 112,755 |
| Special assessments receivable | 1,190 | - | (11,399) |
| Prepaid items | 22,109 | 18,067 | 383 |
| Inventories | - | (31,110) | - |
| Deferred pension resources | 77,347 | 41,217 | 42,190 |
| Deferred other post employment benefit resources | (2,231) | (1,643) | (1,251) |
| Increase (decrease) in liabilities and deferred inflows of resources | | | |
| Accounts payable | 14,872 | 39,638 | (100,081) |
| Accrued salaries and withholdings payable | (15,625) | (30,077) | (7,142) |
| Compensated absences payable | (2,052) | 5,011 | (1,824) |
| Deposits payable | - | 90 | - |
| Net pension liability | (189,696) | (23,845) | (101,685) |
| Other postemployment benefits payable | 13,853 | 10,203 | 7,770 |
| Deferred pension resources | (14,461) | 65,794 | (6,708) |
| Deferred other post employment benefit resources | 873 | 643 | 490 |
| Due to other governments | - | 4,082 | - |
| Net Cash Provided (Used) by Operating Activities | $ 1,239,382 | $ 274,242 | $ 152,164 |
| Supplemental Schedule of Noncash Capital and Related Financing Activities | | | |
| Amortization of discounts / (premiums) on bonds | $ (3,433) | $ - | $ (1,210) |
| Capital contributions from developers | $ 332,736 | $ - | $ 228,210 |

The notes to the financial statements are an integral part of this statement.

| Business-Type Activities - Enterprise Funds | | |
|---|---|---|
| **615** Water | **620** Generation | Totals |
| $ 286,678 | $ 9,685 | $ 950,472 |
| 40,118 | 1,764 | 75,445 |
| 759,220 | 215,187 | 2,071,377 |
| (18,861) | 1,053 | (74,409) |
| - | - | 112,755 |
| 742 | 657 | (8,810) |
| 175,517 | (33,265) | 182,811 |
| (87,142) | - | (118,252) |
| 72,886 | 13,662 | 247,302 |
| (2,548) | (145) | (7,818) |
| (269) | 11,583 | (34,257) |
| (22,301) | 3,124 | (72,021) |
| (17,564) | 2,076 | (14,353) |
| (29,701) | 413 | (29,198) |
| (153,839) | (33,022) | (502,087) |
| 15,824 | 899 | 48,549 |
| (10,038) | (6,617) | 27,970 |
| 998 | 57 | 3,061 |
| (3,690) | - | 392 |
| $ 1,006,030 | $ 187,111 | $ 2,858,929 |
| $ - | $ - | $ (4,643) |
| $ 464,115 | $ - | $ 1,025,061 |

The notes to the financial statements are an integral part of this statement.

THIS PAGE IS LEFT

BLANK INTENTIONALLY

## Note 1: Summary of Significant Accounting Policies

### A. Reporting Entity

The City of North Branch (the City) is a municipal corporation of the "Optional Plan A" form of government defined in *Minnesota Statutes*. The City Council, composed of an elected mayor and four elected trustees or council members, exercises legislative authority and determines all matters of policy. The City Council appoints personnel responsible for the proper administration of all affairs relating to the City.

The City has considered all potential units for which it is financially accountable, and other organizations for which the nature and significance of their relationship with the City are such that exclusion would cause the City's financial statements to be misleading or incomplete. The Governmental Accounting Standards Board (GASB) has set forth criteria to be considered in determining financial accountability. These criteria include appointing a voting majority of an organization's governing body, and (1) the ability of the primary government to impose its will on that organization or (2) the potential for the organization to provide specific benefits to, or impose specific financial burdens on the primary government. The blended component units, although legally separate entities are, in substance, part of the City's operations and so data from these units are combined with data of the City. The City has the following component unit:

***Blended Component Unit.*** The Economic Development Authority (EDA) of the City was created pursuant to Minnesota statutes 469.090 through 469.108 to carry out economic and industrial development and redevelopment consistent with policies established by the City Council. The City has the authority to approve and modify the EDA's budget, and the City Council has the ability to veto, overrule, or modify the decisions of the EDA's governing body. The EDA activities are blended and reported as a special revenue fund due to substantively the same governing board and due to the City having operation responsibility. Separate financial statements are not issued for this component unit.

### B. Government-wide and Fund Financial Statements

The government-wide financial statements (i.e., the statement of net position and the statement of activities) report information on all of the nonfiduciary activities of the primary government. *Governmental activities,* which normally are supported by taxes and intergovernmental revenues, are reported separately from *business-type activities,* which rely to a significant extent on fees and charges for support.

The statement of activities demonstrates the degree to which the direct expenses of a given function or segment are offset by program revenues. *Direct expenses* are those that are clearly identifiable with a specific function or segment. Amounts reported as *program revenues* include 1) charges to customers or applicants who purchase, use, or directly benefit from goods, services, or privileges provided by a given function or segment and 2) grants and contributions that are restricted to meeting the operational or capital requirements of a particular function or segment. Taxes and other items not properly included among program revenues are reported instead as *general revenues.*

Separate financial statements are provided for governmental funds and proprietary funds, even though the latter are excluded from the government-wide financial statements. Major individual governmental funds and major individual enterprise funds are reported as separate columns in the fund financial statements.

### C. Measurement Focus, Basis of Accounting and Financial Statement Presentation

The government-wide financial statements are reported using the *economic resources measurement focus* and the *accrual basis of accounting,* as are the proprietary and fiduciary fund financial statements. Revenues are recorded when earned and expenses are recorded when liability is incurred, regardless of the timing of related cash flows. Property taxes are recognized as revenues in the year for which they are levied. Grants and similar items are recognized as revenue as soon as all eligibility requirements imposed by the provider have been met.

## Note 1: Summary of Significant Accounting Policies (Continued)

Governmental fund financial statements are reported using the *current financial resources measurement focus* and the *modified accrual basis of accounting*. Revenues are recognized as soon as they are both measurable and available. Revenues are considered to be *available* when they are collectible within the current period or soon enough thereafter to pay liabilities of the current period. For this purpose, the City considers revenues to be available if they are collected within 60 days of the end of the current fiscal period. Expenditures generally are recorded when a liability is incurred, as under accrual accounting. However, debt service expenditures, as well as expenditures related to compensated absences and claims and judgments, are recorded only when payment is due.

Property taxes, special assessments, franchise taxes, intergovernmental revenues, charges for services and interest associated with the current fiscal period are all considered to be susceptible to accrual and so have been recognized as revenues of the current fiscal period. Only the portion of special assessments receivable due within the current fiscal period is considered to be susceptible to accrual as revenue of the current period. All other revenue items are considered to be measurable and available only when cash is received by the City.

Revenue resulting from exchange transactions, in which each party gives and receives essentially equal value, is recorded on the accrual basis when the exchange takes place. On a modified accrual basis, revenue is recorded in the year in which the resources are measurable and become available.

Non-exchange transactions, in which the City receives value without directly giving equal value in return, include property taxes, grants, entitlement and donations. On an accrual basis, revenue from property taxes is recognized in the year for which the tax is levied. Revenue from grants, entitlements and donations is recognized in the year in which all eligibility requirements have been satisfied. Eligibility requirements include timing requirements, which specify the year when the resources are required to be used or the year when use is first permitted, matching requirements, in which the City must provide local resources to be used for a specified purpose, and expenditure requirements, in which the resources are provided to the City on a reimbursement basis. On a modified accrual basis, revenue from non-exchange transactions must also be available before it can be recognized.

Unearned revenue arises when assets are recognized before revenue recognition criteria have been satisfied. Grants and entitlements received before eligibility requirements are met are also recorded as unearned revenue.

The preparation of financial statements in conformity with accounting principles generally accepted in the United States of America requires management to make estimates and assumptions that affect certain reported amounts and disclosures. Accordingly, actual results could differ from those estimates.

The City reports the following major governmental funds:

The *General fund* is the City's primary operating fund. It accounts for all financial resources of the general government, except those required to be accounted for in another fund.

The *Debt Service fund* is used to account for the accumulation of resources used for the payment of principal, interest, and fiscal agent fees on long-term debt of the governmental funds.

The *Capital Projects fund* is fund is used to account for financial resources to be used for the acquisition and construction of major capital facilities or equipment.

## Note 1: Summary of Significant Accounting Policies (Continued)

The City reports the following major proprietary funds:

The *Sewer fund* accounts for the operating, maintenance, and capital improvement of the City's wastewater collection and treatment facilities.

The *Municipal Liquor fund* accounts for the operation, maintenance, and capital improvements of the City's municipal liquor store.

The *Storm Sewer fund* accounts for the operating, maintenance, and capital improvement of the City's storm sewer system.

The *Water fund* accounts for the operating, maintenance, and capital improvement of the City's customer water services.

The *Generation fund* accounts for the operation of the City's customer electrical services.

As a general rule the effect of interfund activity has been eliminated from government-wide financial statements. Exceptions to this general rule are transactions that would be treated as revenues, expenditures or expenses if they involved external organizations, such as buying goods and services or payment in lieu of taxes, are similarly treated when they involve other funds of the City. Elimination of these charges would distort the direct costs and program revenues reported for the various functions concerned.

Proprietary funds distinguish *operating* revenues and expenses from *nonoperating* items. Operating revenues and expenses generally result from providing services and producing and delivering goods in connection with a proprietary fund's principal ongoing operations. The principal operating revenues of the City's enterprise funds and of the City's internal service funds are charges to customers for sales and services. The City also recognizes as operating revenue the portion of tap fees intended to recover the cost of connecting new customers to the system. All revenues and expenses not meeting this definition are reported as nonoperating revenues and expenses.

### D. Assets, Deferred Outflows of Resources, Liabilities, Deferred Inflows of Resources and Net Position/Fund Balance

***Deposits and Investments***

The City's cash and cash equivalents are considered to be cash on hand, demand deposits and short-term investments with original maturities of three months or less from the date of acquisition. The proprietary funds' portion in the government-wide cash and temporary investments pool is considered to be cash and cash equivalents for purposes of the statements of cash flows.

Cash balances from all funds are pooled and invested, to the extent available, in certificates of deposit and other authorized investments. Earnings from such investments are allocated on the basis of applicable participation by each of the funds.

## Note 1: Summary of Significant Accounting Policies (Continued)

The City may invest idle funds as authorized by Minnesota statutes, as follows:

1. Direct obligations or obligations guaranteed by the United States or its agencies.

2. Shares of investment companies registered under the Federal Investment Company Act of 1940 and received the highest credit rating, rated in one of the two highest rating categories by a statistical rating agency, and have a final maturity of thirteen months or less.

3. General obligations of a state or local government with taxing powers rated “A” or better; revenue obligations rated “AA” or better.

4. General obligations of the Minnesota Housing Finance Agency rated “A” or better.

5. Obligation of a school district with an original maturity not exceeding 13 months and (i) rated in the highest category by a national bond rating service or (ii) enrolled in the credit enhancement program pursuant to statute section 126C.55.

6. Bankers’ acceptances of United States banks eligible for purchase by the Federal Reserve System.

7. Commercial paper issued by United States banks corporations or their Canadian subsidiaries, of highest quality category by at least two nationally recognized rating agencies, and maturing in 270 days or less.

8. Repurchase or reverse repurchase agreements and securities lending agreements with financial institutions qualified as a “depository” by the government entity, with banks that are members of the Federal Reserve System with capitalization exceeding $10,000,000, a primary reporting dealer in U.S. government securities to the Federal Reserve Bank of New York, or certain Minnesota securities broker-dealers.

9. Guaranteed Investment Contracts (GIC's) issued or guaranteed by a United States commercial bank, a domestic branch of a foreign bank, a United States insurance company, or its Canadian subsidiary, whose similar debt obligations were rated in one of the top two rating categories by a nationally recognized rating agency.

Broker money market funds operate in accordance with appropriate state laws and regulations. The reported value of the pool is the same as the fair value of the shares.

The City categorizes its fair value measurements within the fair value hierarchy established by generally accepted accounting principles. The hierarchy is based on the valuation inputs used to measure the fair value of the asset. Level 1 inputs are quoted prices in active markets for identical assets; Level 2 inputs are significant other observable inputs; Level 3 inputs are significant unobservable inputs.

The City has the following recurring fair value measurements as of December 31, 2024:

- Municipal and Government agency securities of $4,849,308 are valued using quoted market prices (Level 1 inputs)

- Negotiable certificates of deposits of $11,017,716 are valued using a matrix pricing model (Level 2 inputs)

## Note 1: Summary of Significant Accounting Policies (Continued)

***Investment Policy***

The City's investment policy incorporates Minnesota statutes as described above which reduces the City's exposure to credit, custodial credit and interest rate risks. Specific risk information for the City is as follows:

- *Credit Risk*. Credit risk is the risk that an issuer or other counterparty to an investment will not fulfill its obligations. Ratings are provided by various credit rating agencies and where applicable, indicate associated credit risk. Minnesota statutes and the City's investment policy limit the City's investments to the list above.

- *Custodial Credit Risk*. Custodial credit risk for investments is the risk that, in the event of the failure of the counterparty to a transaction, a government will not be able to recover the value of investment or collateral securities that are in the possession of an outside party. The City's policy states it will maintain custody of securities and cash holdings outside of authorized depository institutions with an eligible custodian that meets statutory and Investment Policy requirements or with a Federal Reserve Bank.

- *Concentration of Credit Risk.* Concentration of credit risk is the risk of loss attributed to the magnitude of a government's investment in a single issuer. The City's policy states the City will attempt to diversify its investments according to type, maturity, and institution. The policy states the portfolio shall not contain more than 50% of the portfolio value in any one institution and no more than 15% of the overall portfolio will be invested in a single issuer.

- *Interest Rate Risk.* Interest rate risk is the risk that changes in interest rates will adversely affect the fair value of an investment. In accordance with its investment policy, the City's investment policy states the City will structure the portfolio so that securities mature to meet cash requirements for ongoing operations, thereby avoiding the need to sell securities on the open market prior to maturity.

***Property Taxes***

The City Council annually adopts a tax levy and certifies it to the County in December for collection in the following year. The County is responsible for collecting all property taxes for the City. These taxes attach an enforceable lien on taxable property within the City on January 1 and are payable by the property owners in two installments. Property taxes may be paid by taxpayers in two equal installments on May 15 and October 15. Chisago County provides settlement to cities and other taxing districts three times a year.

Delinquent taxes receivable include the past six years' uncollected taxes. Delinquent taxes have been offset by a deferred inflow of resources for taxes not received within 60 days after year-end in the governmental fund financial statements.

***Accounts Receivable***

When necessary, the City utilizes an allowance for uncollectible accounts to value its receivables. However, the City considers all of its current receivables to be collectible. Delinquent utility charges are annually certified to the county for collection. As a result, there is no allowance for uncollectable amounts in the enterprise funds.

***Special Assessments***

Special assessments represent the financing for public improvements paid for by benefiting property owners. These assessments are recorded as receivable upon certification to the County. Special assessments are recognized as revenue when they are received in cash or within 60 days after year end. All governmental special assessments receivable are offset by a deferred inflow of resources in the fund financial statements.

## Note 1: Summary of Significant Accounting Policies (Continued)

***Interfund Receivables and Payables***

Transactions between funds that are representative of lending/borrowing arrangements outstanding at the end of the fiscal year are referred to as either "interfund receivables/payables" (i.e. the current portion of interfund loans) or "advances to/from other funds" (i.e. the non-current portion of interfund loans). All other outstanding balances between funds are reported as "due to/from other funds." Any residual balances outstanding between the governmental activities and business-type activities are reported in the government-wide financial statements as "internal balances."

***Inventories and Prepaid Items***

Inventories of materials and supplies are recorded at cost, which approximates market, using the first-in, first out (FIFO) method. Inventories consist of expendable supplies held for consumption. Inventories of governmental funds are recorded as expenditures when consumed rather than when purchased.

Certain payments to vendors reflect costs applicable to future accounting periods and are recorded as prepaid items. The City uses the consumption method to account for all prepaid items.

***Lease Receivable***

The City's lease receivable is measured at the present value of lease payments expected to be received during the lease term.

A deferred inflow of resources is recorded for the lease. The deferred inflow of resources is recorded at the initiation of the lease in an amount equal to the initial recording of the lease receivable. The deferred inflow of resources is amortized on a straight-line basis over the term of the lease.

***Assets Held for Resale***

Land was acquired by the City and EDA for subsequent resale for redevelopment purposes. Land held for resale is an asset recorded at the lower of cost or realizable value in the fund that acquired it.

***Capital Assets***

Capital assets, which include property, plant, equipment, and infrastructure assets (e.g., roads, bridges, sidewalks, and similar items), are reported in the applicable governmental or business-type activities columns in the government-wide financial statements. This includes infrastructure acquired prior to the implementation of GASB Statement No. 34.

Capital assets, which include property, plant, equipment and infrastructure assets (e.g., roads, bridges, sidewalks, and similar items) are reported in the applicable governmental or business-type activities columns in the government-wide financial statements. Capital assets are defined by the City as assets with an initial, individual cost of more than $15,000 (amount not rounded) and an estimated useful life in excess of one year.

## Note 1: Summary of Significant Accounting Policies (Continued)

In the case of initial capitalization of general infrastructure assets (i.e., those reported by governmental activities) the City chose to include items dating back to June 30, 1980. The City was able to estimate the historical cost for the initial reporting of these assets through back trending (i.e., estimating the current replacement cost of the infrastructure to be capitalized and using an appropriate price-level index to deflate the cost to the acquisition year or estimated acquisition year). As the City constructs or acquires capital assets each period, including infrastructure assets, they are capitalized and reported at historical cost. The reported value excludes normal maintenance and repairs which are essentially amounts spent in relation to capital assets that do not increase the capacity or efficiency of the item or extend its useful life beyond the original estimate. In the case of donations the City values these capital assets at the acquisition value of the item at the date of its donation.

Property, plant and equipment are depreciated using the straight-line method over the following estimated useful lives:

| Assets | Years |
|---|---|
| Building and Improvements | 20 to 40 |
| Machinery and Equipment | 5 to 15 |
| Vehicles | 5 to 15 |
| Infrastructure | 20 to 40 |
| Proprietary Funds: | |
| Buildings and Improvements | 20 to 50 |
| Machinery and Equipment | 5 to 30 |
| Infrastructure | 20 to 50 |

***Deferred Outflows of Resources***

In addition to assets, the statement of net position will sometimes report a separate section for deferred outflows of resources. This separate financial statement element, deferred outflows of resources, represents a consumption of net assets that applies to future periods and so will not be recognized as an outflow of resources (expense/expenditure) until then. The City has two items that qualify for reporting in this category. These items, deferred pension resources and deferred other postemployment benefit resources. These items result from actuarial calculations and current year pension contributions and OPEB contributions made subsequent to the measurement date.

***Compensated Absences***

It is the City's policy to permit employees to accumulate earned but unused vacation and sick pay benefits (PTO). An employee leaving the service of the City in good standing will be compensated for all of their unused PTO. All compensated absences pay is accrued when incurred in the government-wide and proprietary financial statements. A liability for these amounts is reported in governmental funds only if they have matured as a result of employee termination or similar circumstances. The unused PTO of the proprietary funds is included in accrued liabilities of the respective fund.

***Postemployment Benefits other than Pensions***

Under *Minnesota statue* 471.61, subdivision 2b., public employers must allow retirees and their dependents to continue coverage indefinitely in an employer-sponsored health care plan, under the following conditions: 1) Retirees must be receiving (or eligible to receive) an annuity from a Minnesota public pension plan, 2) Coverage must continue in a group plan until age 65, and retirees must pay no more than the group premium, and 3) Retirees may obtain dependent coverage immediately before retirement. All premiums are funded on a pay-as-you-go basis. The liability was actuarially determined, in accordance with GASB 75, at January 1, 2023 valuation date. The measurement date is January 1, 2024. The General fund is typically used to liquidate governmental other postemployment benefits payable.

## Note 1: Summary of Significant Accounting Policies (Continued)

***Long-term Obligations***

In the government-wide financial statements, and proprietary fund types in the fund financial statements, long-term debt and other long-term obligations are reported as liabilities in the applicable governmental activities, business-type activities, or proprietary fund type statement of net position. The recognition of bond premiums and discounts are deferred and amortized over the life of the bonds using the straight line method. Bonds payable are reported net of the applicable bond premium or discount. Bond issuance costs are reported as an expense in the period incurred.

In the fund financial statements, governmental fund types recognized bond premiums and discounts, as well as bond issuance costs, during the current period. The face amount of debt issued is reported as other financing sources. Premiums received on debt issuances are reported as other financing sources while discounts on debt issuances are reported as other financing uses. Issuance costs, whether or not withheld from the actual debt proceeds received, are reported as debt service expenditures. Bond premiums and discounts are deferred and amortized over the life of the bonds using the straight-line method.

***Pensions***

For purposes of measuring the net pension liability, deferred outflows/inflows of resources, and pension expense, information about the fiduciary net position of the Public Employees Retirement Association (PERA) and additions to/deductions from PERA's fiduciary net position have been determined on the same basis as they are reported by PERA except that PERA's fiscal year end is June 30. For this purpose, plan contributions are recognized as of employer payroll paid dates and benefit payments and refunds are recognized when due and payable in accordance with the benefit terms. Investments are reported at fair value. The General fund is typically used to liquidate the governmental net pension liability.

The total pension expense for the GERP, PEPFP, DCP and North Branch Fire Relief Association is as follows:

| | Public Employees Retirement Association of Minnesota (PERA) | | | Fire Relief Association | Total All Plans |
|---|---|---|---|---|---|
| | GERP | PEPFP | PEDCP | | |
| City's proportionate share | $ 238,366 | $ 181,024 | $ 600 | $ 49,947 | $ 469,937 |
| Proportionate share of State's contribution | 865 | 5,912 | - | - | 6,777 |
| Total Pension Expense | $ 239,231 | $ 186,936 | $ 600 | $ 49,947 | $ 476,714 |

***Unearned Revenue***

The City's unearned revenue consists of grant revenues that have not yet met the revenue recognition criteria.

## Note 1: Summary of Significant Accounting Policies (Continued)

***Deferred Inflows of Resources***

In addition to liabilities, the statement of net position and fund financial statements will sometimes report a separate section for deferred inflows of resources. This separate financial statement element, *deferred inflows of resources*, represents an acquisition of net assets that applies to a future period(s) and so will not be recognized as an inflow of resources (revenue) until that time. The City has the following items listed below reported in the statement of net position and governmental funds balance sheet.

- *Unavailable revenues* are presented in the governmental funds from three sources: property taxes, special assessments, and other. These arise only under a modified accrual basis of accounting that qualifies for reporting in this category. These amounts are deferred and recognized as an inflow of resources in the period that the amounts become available.

- *Deferred intergovernmental resources* are reported in the governmental funds balance sheet and were received in advance and apply to future periods. This item is also reported in the statement of net position.

- *Deferred pension resources* are reported only in the statements of net position and results from actuarial calculations.

- *Deferred other postemployment benefit resources* are reported only in the statements of net position and results from actuarial calculations.

- *Deferred lease resources* are reported in the governmental funds balance sheet and are deferred to the period the amounts become available. This item is also reported in the statement of net position.

***Fund Balance***

In the fund financial statements, fund balance is divided into five classifications based primarily on the extent to which the City is bound to observe constraints imposed upon the use of resources reported in the governmental funds. These classifications are defined as follows:

*Nonspendable* - Amounts that cannot be spent because they are not in spendable form, such as prepaid items.

*Restricted* - Amounts related to externally imposed constraints established by creditors, grantors or contributors; or constraints imposed by state statutory provisions.

*Committed* - Amounts constrained for specific purposes that are internally imposed by formal action (resolution) of the City Council, which is the City's highest level of decision-making authority. Committed amounts cannot be used for any other purpose unless the City Council modifies or rescinds the commitment by resolution.

*Assigned* - Amounts constrained for specific purposes that are internally imposed. In governmental funds other than the General fund, assigned fund balance represents all remaining amounts that are not classified as nonspendable and are neither restricted nor committed. In the General fund, assigned amounts represent intended uses established by the City Council itself or by an official to which the governing body delegates the authority. The City Council has adopted a fund balance policy which delegates the authority to assign amounts for specific purposes to the City Administrator.

*Unassigned* - These are residual amounts in the General Fund not reported in any other classification. The General Fund is the only fund that can report a positive unassigned fund balance. Other funds would report a negative unassigned fund balance should the total of nonspendable, restricted and committed fund balances exceed the total net resources of that fund.

The City considers restricted amounts to be spent first when both restricted and unrestricted fund balance is available. Additionally, the City would first use committed, then assigned, and lastly unassigned amounts of unrestricted fund balance when expenditures are made.

## Note 1: Summary of Significant Accounting Policies (Continued)

The City has formally adopted a fund balance policy for the General fund. The City's policy is to maintain a minimum unrestricted (combined committed, assigned and unassigned) fund balance of 45-55 percent of the subsequent year's budgeted operating expenditures of the General Fund. For 2024, the unrestricted fund balance in the General fund has fallen below this range.

***Net Position***

Net position represents the difference between assets and deferred outflows of resources and liabilities and deferred inflows of resources. Net position is displayed in three components:

a. Net investment in capital assets - Consists of capital assets, net of accumulated depreciation reduced by any outstanding debt attributable to acquire capital assets.

b. Restricted net position - Consists of net position balances restricted when there are limitations imposed on their use through external restrictions imposed by creditors, grantors, laws or regulations of other governments.

c. Unrestricted net position - All other net position that do not meet the definition of "restricted" or "net investment in capital assets".

When both restricted and unrestricted resources are available for use, it is the City's policy to use restricted resources first, then unrestricted resources as they are needed.

***Use of Estimates***

The preparation of financial statements in conformity with accounting principles generally accepted in the United States of America requires management to make estimates and assumptions that affect the reported amounts of assets and liabilities and disclosure of contingent assets and liabilities at the date of the financial statements. Estimates also affect the reported amounts of revenue and expenditures/expense during the reporting period. Actual results could differ from those estimates.

## Note 2: Stewardship, Compliance and Accountability

### A. Budgetary Information

Annual budgets are adopted on a basis consistent with accounting principles generally accepted in the United States of America for the General fund. All annual appropriations lapse at year end. The City does not use encumbrance accounting.

In May of each year, all departments of the City submit requests for appropriations to the City Administrator so that a budget may be prepared. Before September 30, the proposed budget is presented to the City Council for review. The City Council holds public hearings and a final budget is prepared and adopted in early December.

The appropriated budget is prepared by fund, function and department. The City's department heads may make transfers of appropriations within a department. Transfers of appropriations between departments require the approval of the City Council. The legal level of budgetary control is the department level. The budget was amended during the year.

## Note 2: Stewardship, Compliance and Accountability (Continued)

### B. Deficit Fund Balance

As of December 31, 2024, the following funds reported deficit fund balances:

| Fund | Amount |
|---|---|
| Primary Government | |
| Major funds | |
| Capital Projects | |
| Road Improvements | $ 125,939 |
| Nonmajor funds | |
| Flashing by Design TIF | 134,571 |

The fund balance deficits are expected to be eliminated with future tax increment, grant revenues, and transfers from other funds.

### C. Excess of Expenditures over Appropriations

The following fund had expenditures in excess of appropriations at December 31, 2024:

| Fund | Final Budget | Actual | Excess of Expenditures Over Appropriations |
|---|---|---|---|
| Primary Government | | | |
| Major | | | |
| General | $ 7,502,975 | $ 7,528,132 | $ 25,157 |

The budget excess was funded by revenues in excess of the budget.

## Note 3: Detailed Notes on All Funds

### A. Deposits and Investments

***Deposits***

Custodial credit risk for deposits and investments is the risk that in the event of a bank failure, the City's deposits and investments may not be returned or the City will not be able to recover collateral securities in the possession of an outside party. In accordance with Minnesota statutes and as authorized by the City Council, the City maintains deposits at those depository banks, all of which are members of the Federal Reserve System.

Minnesota statutes require that all City deposits be protected by insurance, surety bond or collateral. The fair value of collateral pledged must equal 110 percent of the deposits not covered by insurance or bonds, which the exception of irrevocable standby letters of credit issued by Federal Home Loan Banks as this type of collateral only requires collateral pledged equal to 100 percent of the deposits not covered by insurance or bonds.

## Note 3: Detailed Notes on All Funds (Continued)

Authorized collateral in lieu of a corporate surety bond includes:

- United States government Treasury bills, Treasury notes, Treasury bonds;
- Issues of United States government agencies and instrumentalities as quoted by a recognized industry quotation service available to the government entity;
- General obligation securities of any state or local government with taxing powers which is rated "A" or better by a national bond rating service, or revenue obligation securities of any state or local government with taxing powers which is rated "AA" or better by a national bond rating service;
- General obligation securities of a local government with taxing powers may be pledged as collateral against funds deposited by that same local government entity;
- Irrevocable standby letters of credit issued by Federal Home Loan Banks to a municipality accompanied by written evidence that the bank's public debt is rated "AA" or better by Moody's Investors Service, Inc., or Standard & Poor's Corporation; and
- Time deposits that are fully insured by any federal agency.

*Minnesota statutes* require that all collateral shall be placed in safekeeping in a restricted account at a Federal Reserve Bank, or in an account at a trust department of a commercial bank or other financial institution that is not owned or controlled by the financial institution furnishing the collateral. The selection should be approved by the City.

At year end, the City's carrying amount of deposits was $8,568,372 and the bank balance was $8,574,443. Of the bank balance, $2,508,030 was covered by Federal depository insurance. The remaining balance was covered by collateral held by the pledging financial institution's trust department in the City's name.

***Investments***

As of December 31, 2024, the City had the following investments that are insured or registered, or securities held by the City's agent in the City's name:

| Types of Investments | Credit Quality/ Ratings (1) | Segmented Time Distribution (2) | Amount | Fair Value Measurement Using | | |
|---|---|---|---|---|---|---|
| | | | | Level 1 | Level 2 | Level 3 |
| Pooled Investments at Amortized Costs | | | | | | |
| Brokered money market funds | N/A | less than 1 year | $ (139,123) | | | |
| Non-pooled Investments at Amortized Costs | | | | | | |
| Municipal securities | AA- | less than 1 year | 299,265 | $ 299,265 | $ - | $ - |
| Government agency securities | AAA | less than 1 year | 1,835,390 | 1,835,390 | - | - |
| Government agency securities | AAA | 1 to 5 years | 2,711,918 | 2,711,918 | - | - |
| Government agency securities | AAA | more than 5 years | 2,735 | 2,735 | - | - |
| Negotiable certifications of deposits | NA | less than 1 year | 6,360,834 | - | 6,360,834 | - |
| Negotiable certifications of deposits | NA | 1 to 5 years | 4,656,882 | - | 4,656,882 | - |
| Total Investments | | | $ 15,727,901 | $ 4,849,308 | $ 11,017,716 | $ - |

(1) Ratings are provided by various credit rating agencies where applicable to indicate associated credit risk.
(2) Interest rate risk is disclosed using the segmented time distribution method.
N/A Indicates not applicable or available.

## Note 3: Detailed Notes on All Funds (Continued)

A reconciliation of cash and investments as shown on the statement of net position for the City follows:

| | |
|---|---|
| Carrying Amount of Deposits | $ 8,568,372 |
| Investments | 15,727,901 |
| Total | $ 24,296,273 |
| Primary Government | |
| Governmental activities | $ 10,253,978 |
| Business-type activities | 13,055,945 |
| Business-type activities - Restricted cash | 986,350 |
| Total | $ 24,296,273 |

**B. Lease Receivable**

| Description | Issue Date | Maturity Date | Discount Rate | Current Year Inflow of Resources | Balance at Year End |
|---|---|---|---|---|---|
| Verizon | 06/01/10 | 10/01/40 | 1.41 % | $ 25,937 | $ 340,075 |
| T-Mobile | 06/01/10 | 04/01/37 | 1.41 | 47,384 | 178,906 |
| Total | | | | | $ 518,981 |

The City, acting as lessor, leases tower space under long-term, noncancelable lease agreements to operate communications equipment. The leases expire in 2037 and 2040 and bear implicit interest rates of 1.41%. The annual amounts to be recognized split between principal and interest are as follows:

| Year Ending December 31, | Principal | Interest | Total |
|---|---|---|---|
| 2025 | $ 28,196 | $ 7,094 | $ 35,290 |
| 2026 | 28,389 | 6,697 | 35,086 |
| 2027 | 29,565 | 6,288 | 35,853 |
| 2028 | 31,677 | 5,860 | 37,537 |
| 2029 | 32,747 | 5,405 | 38,152 |
| 2030 - 2034 | 180,590 | 19,704 | 200,294 |
| 2035 - 2039 | 165,078 | 6,723 | 171,801 |
| 2040 | 22,739 | 120 | 22,859 |
| Total | $ 518,981 | $ 57,891 | $ 576,872 |

## Note 3: Detailed Notes on All Funds (Continued)

### C. Capital Assets

Capital asset activity for the year ended December 31, 2024 was as follows:

| | Beginning Balance | Increases | Decreases | Ending Balance |
|---|---|---|---|---|
| **Governmental Activities** | | | | |
| Capital Assets not Being Depreciated | | | | |
| Land | $ 2,451,297 | $ - | $ - | $ 2,451,297 |
| Construction in progress | 1,139,793 | 1,721,982 | (1,210,397) | 1,651,378 |
| Total Capital Assets not Being Depreciated | 3,591,090 | 1,721,982 | (1,210,397) | 4,102,675 |
| Capital Assets Being Depreciated | | | | |
| Buildings and Improvements | 3,521,961 | - | - | 3,521,961 |
| Machinery and Equipment | 3,066,662 | 201,989 | - | 3,268,651 |
| Vehicles | 4,069,057 | 743,680 | - | 4,812,737 |
| Infrastructure | 45,608,305 | 2,432,186 | - | 48,040,491 |
| Total Capital Assets Being Depreciated | 56,265,985 | 3,377,855 | - | 59,643,840 |
| Less Accumulated Depreciation for | | | | |
| Buildings and Improvements | (2,005,387) | (89,419) | - | (2,094,806) |
| Machinery and Equipment | (1,581,434) | (123,230) | - | (1,704,664) |
| Vehicles | (2,273,163) | (246,019) | - | (2,519,182) |
| Infrastructure | (15,027,846) | (1,176,447) | - | (16,204,293) |
| Total Accumulated Depreciation | (20,887,830) | (1,635,115) | - | (22,522,945) |
| Total Capital Assets Being Depreciated, Net | 35,378,155 | 1,742,740 | - | 37,120,895 |
| Governmental Activities Capital Assets, Net | $ 38,969,245 | $ 3,464,722 | $ (1,210,397) | $ 41,223,570 |

Depreciation expense was charged to functions/programs of the governmental activities as follows:

| | |
|---|---|
| **Governmental Activities** | |
| General government | $ 98,928 |
| Public safety | 165,475 |
| Public works | 1,241,034 |
| Parks and recreation | 129,678 |
| Total Depreciation Expense - Governmental Activities | $ 1,635,115 |

## Note 3: Detailed Notes on All Funds (Continued)

| | Beginning Balance | Increases | Decreases | Ending Balance |
|---|---|---|---|---|
| **Business-type Activities** | | | | |
| Capital Assets not Being Depreciated | | | | |
| Land | $ 437,379 | $ - | $ - | $ 437,379 |
| Construction in progress | 582,457 | 3,527,434 | (4,109,891) | - |
| Total Capital Assets not Being Depreciated | 1,019,836 | 3,527,434 | (4,109,891) | 437,379 |
| Capital Assets Being Depreciated | | | | |
| Building and Improvements | 14,515,810 | - | - | 14,515,810 |
| Lease building | 728,519 | - | - | 728,519 |
| Machinery and Equipment | 31,242,550 | 484,086 | - | 31,726,636 |
| Infrastructure | 25,700,504 | 4,805,684 | - | 30,506,188 |
| Total Capital Assets Being Depreciated | 72,187,383 | 5,289,770 | - | 77,477,153 |
| Less Accumulated Depreciation/Amortization for | | | | |
| Building and Improvements | (17,658,600) | (1,029,081) | - | (18,687,681) |
| Lease building | (192,935) | (86,851) | - | (279,786) |
| Machinery and Equipment | (2,342,933) | (321,539) | - | (2,664,472) |
| Infrastructure | (11,096,483) | (633,906) | - | (11,730,389) |
| Total Accumulated Depreciation | (31,290,951) | (2,071,377) | - | (33,362,328) |
| Total Capital Assets Being Depreciated, Net | 40,896,432 | 3,218,393 | - | 44,114,825 |
| Business-type Activities Capital Assets, Net | $ 41,916,268 | $ 6,745,827 | $ (4,109,891) | $ 44,552,204 |

Depreciation and amortization expense was charged to functions/programs of the business-type activities as follows:

| | |
|---|---|
| **Business-type Activities** | |
| Sewer | $ 661,531 |
| Municipal Liquor | 124,763 |
| Storm Sewer | 310,676 |
| Water | 759,220 |
| Generation | 215,187 |
| Total Depreciation/Amortization Expense - Business-type Activities | $ 2,071,377 |

## Note 3: Detailed Notes on All Funds (Continued)

***Construction Commitments***

The City has active construction projects as of December 31, 2024. The projects include various street and road improvements and public facilities projects. At year end the City's commitments with contractors are as follows:

| Project | Spent to Date | Remaining Commitment |
|---|---|---|
| Water Town Rehabilitation | $ 579,639 | $ 90,257 |
| 2024 Street Overlay | 1,189,632 | 239,082 |
| Total | $ 1,769,271 | $ 329,339 |

**D. Interfund Receivables, Payables and Transfers**

Due to/from funds represent reclassifications of temporary cash deficits in individual fund and other short-term loans expected to be repaid within one year. At year end, the balances were as follows:

| Receivable Fund | Payable Fund | Amount |
|---|---|---|
| Primary Government | | |
| General | Nonmajor governmental | $ 277,149 |
| General | Nonmajor governmental | 134,571 |
| Total | | $ 411,720 |

The composition of interfund transfers for the year ended December 31, 2024 is as follows:

| | Transfers In | | | | |
|---|---|---|---|---|---|
| Fund | General | Debt Service | Capital Projects | Nonmajor Governmental | Total |
| Transfer Out | | | | | |
| General | $ - | $ 4,270 | $ 523,939 | $ 185,000 | $ 713,209 |
| Capital Projects | 10,654 | - | - | - | 10,654 |
| Nonmajor governmental | 79,324 | 471,579 | - | - | 550,903 |
| Water | 39,263 | - | - | - | 39,263 |
| Municipal Liquor | 80,000 | - | - | - | 80,000 |
| Total Transfers | $ 209,241 | $ 475,849 | $ 523,939 | $ 185,000 | $ 1,394,029 |

The city annually budgets transfers for specific purposes. Annual transfers include transfer designated as a percentage of annual revenues, transfers made to over funds annual operations, transfers for debt service payments, transfers made as part of capital improvement plans and other transfers made for various reasons.

- The City made one-time transfers from the Water fund in the amount of $39,263 to the General fund to close out an internal portion of the general fund for prior year payroll costs related to the prior conversion from North Branch Power and Light.

- The City made one-time transfers from the General fund to the Debt Service fund and to the Capital Project fund to close individual funds.

## Note 3: Detailed Notes on All Funds (Continued)

### E. General Long-term Debt

General Obligation Bonds

The City issues general obligation bonds and equipment certificates to provide funds for improvements, recreational facilities, or projects which benefit the City as a whole and are, therefore, repaid from ad valorem levies. General obligation bonds are direct obligations and pledge the full faith and credit of the government. General obligation bonds currently outstanding are as follows:

| Description | Authorized and Issued | Interest Rate | Dated | Maturity Date | Balance at Year End |
|---|---|---|---|---|---|
| 2020A G.O. Refunding Bonds | $ 352,000 | 1.81 % | 12/31/2020 | 2/1/2029 | $ 205,000 |
| 2022A G.O Equipment Certificates | 990,000 | 2.00 | 3/10/2022 | 2/1/2032 | 870,000 |
| Total General Obligation Bonds | | | | | $ 1,075,000 |

The annual service requirements to maturity for the general obligation bonds are as follows:

| Year Ending December 31, | Governmental Activities | | |
|---|---|---|---|
| | Principal | Interest | Total |
| 2025 | $ 162,000 | $ 19,530 | $ 181,530 |
| 2026 | 160,000 | 16,388 | 176,388 |
| 2027 | 164,000 | 13,223 | 177,223 |
| 2028 | 173,000 | 9,931 | 182,931 |
| 2029 | 131,000 | 6,971 | 137,971 |
| 2030 - 2032 | 285,000 | 8,550 | 293,550 |
| Total | $ 1,075,000 | $ 74,594 | $ 1,149,594 |

General Obligation Improvement Bonds

These Bonds were issued to finance various improvements and will be repaid primarily from special assessments levied on the properties benefiting from the improvements. However, some issues are partly financed by ad valorem levies.

| Description | Authorized and Issued | Interest Rate | Dated | Maturity Date | Balance at Year End |
|---|---|---|---|---|---|
| 2013A G.O. Improvement Refunding Bonds | $ 5,920,000 | 0.55 - 2.00 % | 1/15/2013 | 2/1/2025 | $ 100,000 |
| 2020A G.O Improvement Bonds | 975,000 | 1.81 | 12/31/2020 | 2/1/2029 | 569,000 |
| Total G.O. Improvement Bonds | | | | | $ 669,000 |

## Note 3: Detailed Notes on All Funds (Continued)

The annual service requirements to maturity for the general obligation special assessment improvement bonds are as follows:

| Year Ending December 31, | Governmental Activities Principal | Interest | Total |
|---|---|---|---|
| 2025 | $ 209,000 | $ 10,312 | $ 219,312 |
| 2026 | 112,000 | 7,312 | 119,312 |
| 2027 | 114,000 | 5,267 | 119,267 |
| 2028 | 116,000 | 3,186 | 119,186 |
| 2029 | 118,000 | 1,068 | 119,068 |
| Total | $ 669,000 | $ 27,145 | $ 696,145 |

General Obligation Lease Revenue Bonds

The following bond was issued to finance the acquisition and construction of premises utilized by the EDA. They will be repaid from ad valorem levies and transfers in from other funds.

| Description | Authorized and Issued | Interest Rate | Dated | Maturity Date | Balance at Year End |
|---|---|---|---|---|---|
| 2017 Taxable Refunding Lease Revenue Bonds | $ 3,535,000 | 2.50 - 3.97 % | 12/28/2017 | 4/1/2031 | $ 2,040,000 |

The annual service requirements to maturity for the general obligation lease revenue bonds are as follows:

| Year Ending December 31, | Governmental Activities Principal | Interest | Total |
|---|---|---|---|
| 2025 | $ 270,000 | $ 70,397 | $ 340,397 |
| 2026 | 280,000 | 61,016 | 341,016 |
| 2027 | 290,000 | 50,982 | 340,982 |
| 2028 | 300,000 | 40,300 | 340,300 |
| 2029 | 310,000 | 28,952 | 338,952 |
| 2030 - 2031 | 590,000 | 22,472 | 612,472 |
| Total | $ 2,040,000 | $ 274,117 | $ 2,314,117 |

General Obligation Tax Increment Bonds

The following bonds will be repaid from revenues generated from tax increment financing districts.

| Description | Authorized and Issued | Interest Rate | Issue Date | Maturity Date | Balance at Year End |
|---|---|---|---|---|---|
| 2017B G.O. Tax Increment Refunding Bonds | $ 1,450,000 | 3.00 % | 6/22/2017 | 2/1/2027 | $ 345,000 |
| 2017C G.O. Tax Increment Refunding Crossover Bonds | 3,105,000 | 3.0 - 3.25 | 6/22/2017 | 2/1/2037 | 2,895,000 |
| Total G.O. tax increment bonds | | | | | $ 3,240,000 |

## Note 3: Detailed Notes on All Funds (Continued)

The annual service requirements to maturity for the general obligation tax increment bonds are as follows:

| Year Ending December 31, | Governmental Activities Principal | Interest | Total |
|---|---|---|---|
| 2025 | $ 325,000 | $ 94,488 | $ 419,488 |
| 2026 | 340,000 | 84,513 | 424,513 |
| 2027 | 175,000 | 76,788 | 251,788 |
| 2028 | 185,000 | 71,388 | 256,388 |
| 2029 | 195,000 | 65,688 | 260,688 |
| 2030 - 2034 | 1,155,000 | 230,788 | 1,385,788 |
| 2035 - 2037 | 865,000 | 43,306 | 908,306 |
| Total | $ 3,240,000 | $ 666,956 | $ 3,906,956 |

General Obligation Revenue Bonds

These bonds were issued to finance the cost of improvements to the City's utility system. They will be retired from net revenue of the Sewer, Storm Sewer, and Water Enterprise Funds. Certain revenue bonds require the City establish separate funds for repayment of these obligations. The City has pledged income derived from the acquired or constructed assets to pay debt service as follows:

| | Sewer | Storm Sewer | Water |
|---|---|---|---|
| Operating Revenues | $ 2,323,908 | $ 486,247 | $ 2,128,447 |
| Principal and Interest | 830,130 | 71,048 | 717,053 |
| Percentage of Revenues | 36 % | 15 % | 34 % |

The components of the general obligation revenue bonds are as follows:

| Description | Authorized and Issued | Interest Rate | Dated | Maturity Date | Balance at Year End |
|---|---|---|---|---|---|
| G.O. Revenue 2003 Sewer Bonds (PFA) | $ 11,500,000 | 2.34 - 2.60 % | 8/5/2003 | 8/20/2033 | $ 4,585,000 |
| G.O. Revenue 2017B Refunding Bonds | 710,000 | 3.00 | 6/22/2017 | 2/1/2027 | 155,000 |
| G.O. Revenue 2020A Refunding Bonds | 45,000 | 1.81 | 12/31/2020 | 2/1/2029 | 25,000 |
| G.O. Revenue 2017A Water Bonds | 8,024,000 | 2.80 | 12/31/2017 | 8/1/2033 | 2,771,000 |
| G.O. Revenue 2022A Equipment Certificates | 555,000 | 2.00 | 3/10/2022 | 2/1/2030 | 500,000 |
| Total Business-type Bonds | | | | | $ 8,036,000 |

## Note 3: Detailed Notes on All Funds (Continued)

The annual service requirements to maturity for the general obligation revenue bonds are as follows:

| Year Ending December 31, | Business-type Activities | | |
|---|---|---|---|
| | Principal | Interest | Total |
| 2025 | $ 1,164,000 | $ 210,551 | $ 1,374,551 |
| 2026 | 1,199,000 | 179,219 | 1,378,219 |
| 2027 | 1,219,000 | 147,077 | 1,366,077 |
| 2028 | 706,000 | 115,080 | 821,080 |
| 2029 | 733,000 | 96,776 | 829,776 |
| 2030 - 2033 | 3,015,000 | 194,927 | 3,209,927 |
| Total | $ 8,036,000 | $ 943,630 | $ 8,979,630 |

Financed Purchase Agreement

In May 2019, the City entered into a finance purchase agreement for the acquisition of a fire engine. The components of the agreement are as follows:

| Description | Authorized and Issued | Interest Rate | Issue Date | Maturity Date | Balance at Year End |
|---|---|---|---|---|---|
| Fire Engine Financed Purchase | $ 506,000 | 4.16 % | 5/20/2019 | 5/20/2030 | $ 341,574 |

The annual service requirements to maturity for the financed purchase are as follows:

| Year Ending December 31, | Governmental Activities | | |
|---|---|---|---|
| | Principal | Interest | Total |
| 2025 | $ 51,290 | $ 14,209 | $ 65,499 |
| 2026 | 53,423 | 12,076 | 65,499 |
| 2027 | 55,646 | 9,853 | 65,499 |
| 2028 | 57,960 | 7,539 | 65,499 |
| 2029 | 60,372 | 5,127 | 65,499 |
| 2030 | 62,883 | 2,616 | 65,499 |
| Total | $ 341,574 | $ 51,420 | $ 392,994 |

Loan Payable from Direct Borrowing

In December 2006, the City entered into a loan with the Chisago County HRA and EDA for the acquisition and resale of parcels owned by the HRA and EDA. The City is required to purchase 50% of the land by July 2016, and the remainder by July 2026. In 2011, the payment terms were amended to be dependent on land resold by the City. In 2020, the two parties agreed to a fixed payment schedule. The components of the loan are as follows:

| Description | Authorized and Issued | Interest Rate | Issue Date | Maturity Date | Balance at Year End |
|---|---|---|---|---|---|
| Chisago County HRA/EDA Loan | $ 1,231,509 | 0.00 % | 12/8/2006 | 2/15/2026 | $ 378,256 |

## Note 3: Detailed Notes on All Funds (Continued)

The annual service requirements to maturity for the financed purchase are as follows:

| Year Ending December 31, | Governmental Activities Principal | Interest | Total |
|---|---|---|---|
| 2025 | $ 225,000 | $ - | $ 225,000 |
| 2026 | 153,256 | - | 153,256 |
| Total | $ 378,256 | $ - | $ 378,256 |

Lease Payable

In July 2017, the City entered into a long-term, noncancelable lease agreement for the leasing of property referred to as North Branch Marketplace to be utilized as the Municipal liquor store. The components of the lease agreement are as follows:

| Description | Total Lease Liability | Interest Rate | Issue Date | Payment Terms | Balance at Year End |
|---|---|---|---|---|---|
| North Branch Market Place - Municipal Liquor Store | $ 728,519 | 2.00 % | 07/01/17 | Monthly | $ 461,151 |

The annual service requirements to maturity for the financed purchase are as follows:

| Year Ending December 31, | Business-type Activities Principal | Interest | Total |
|---|---|---|---|
| 2025 | $ 86,574 | $ 6,936 | $ 93,510 |
| 2026 | 87,075 | 6,696 | 93,771 |
| 2027 | 88,832 | 4,939 | 93,771 |
| 2028 | 90,625 | 3,146 | 93,771 |
| 2029 | 92,455 | 1,316 | 93,771 |
| 2030 - 2033 | 15,590 | 39 | 15,629 |
| Total | $ 461,151 | $ 23,072 | $ 484,223 |

## Note 3: Detailed Notes on All Funds (Continued)

Changes in Long-term Liabilities

During the year ended December 31, 2024, the following changes occurred in non-current liabilities reported on the government-wide statements.

| | Beginning Balance | Increases | Decreases | Ending Balance | Due Within One Year |
|---|---|---|---|---|---|
| **Governmental Activities** | | | | | |
| Bonds Payable | | | | | |
| General obligation bonds | $ 1,233,000 | $ - | $ (158,000) | $ 1,075,000 | $ 162,000 |
| General obligation improvement bonds | 905,000 | - | (236,000) | 669,000 | 209,000 |
| General obligation revenue bonds | 2,300,000 | - | (260,000) | 2,040,000 | 270,000 |
| General obligation tax increment bonds | 3,555,000 | - | (315,000) | 3,240,000 | 325,000 |
| Unamortized premium | 83,753 | - | (12,697) | 71,056 | - |
| Total Bonds Payable | 8,076,753 | - | (981,697) | 7,095,056 | 966,000 |
| Financed Purchase Agreement | 390,815 | - | (49,241) | 341,574 | 51,290 |
| Loan Payable from Direct Borrowing | 603,256 | - | (225,000) | 378,256 | 225,000 |
| Compensated Absences Payable* | 297,471 | 18,849 | - | 316,320 | 56,828 |
| Governmental Activity Long-term Liabilities | $ 9,368,295 | $ 18,849 | $ (1,255,938) | $ 8,131,206 | $ 1,299,118 |
| **Business-type Activities** | | | | | |
| Bonds Payable | | | | | |
| General obligation revenue bonds | $ 9,408,000 | $ - | $ (1,372,000) | $ 8,036,000 | $ 1,164,000 |
| Unamortized premium | 20,678 | - | (4,643) | 16,035 | - |
| Total Bonds Payable - Net | 9,428,678 | - | (1,376,643) | 8,052,035 | 1,164,000 |
| Lease Payable | 552,061 | - | (90,910) | 461,151 | 86,574 |
| Compensated Absences Payable* | 120,599 | - | (14,353) | 106,246 | 17,315 |
| Business-type Activity Long-term Liabilities | $ 10,101,338 | $ - | $ (1,481,906) | $ 8,619,432 | $ 1,267,889 |

*The change in compensated absences is presented as a net change.

Conduit Debt Obligations

The City issued the $4,075,000 Health Care and Facilities Refunding Note (North Branch Senior Living Project), Series 2014. The note is secured by the property financed and is payable solely from payments received on the underlying mortgage loan. Neither the City, the state, nor any political subdivision thereof, is obligated in any manner for repayment of the note. Accordingly, the note is not reported as a liability in the accompanying financial statements. The principal balance outstanding at December 31, 2024 was $2,068,179.

The City issued the $1,868,539 Revenue Note, Series 2015A, the $216,600 Taxable Revenue Note, Series 2015B, and the $1,579,518 Revenue Note, Series 2015C to finance the Family Pathways Project. Neither the City, State, nor any political subdivision thereof, is obligated in any manner for repayment of the notes. Accordingly, the notes are not reported as a liability in the accompanying financial statements. The principal balance outstanding at December 31, 2024 was $2,477,754.

As of December 31, 2024 the City was in compliance with the provisions of the revenue bonds which require a 100% debt coverage requirements. The City will continue to monitor rates and expenses to ensure compliance.

## Note 3: Detailed Notes on All Funds (Continued)

### F. Components of Fund Balance

At December 31, 2024, portions of the City's fund balance are not available for appropriation due to not being in spendable form (Nonspendable), legal restrictions (Restricted), City Council action (Committed), policy and/or intent (Assigned). The following is a summary of the components of fund balance:

| | General | Debt Service | Capital Projects | Other Governmental Funds | Total |
|---|---|---|---|---|---|
| Nonspendable for Prepaid Items | | | | | |
| Prepaid items | $ 489,849 | $ - | $ - | $ - | $ 489,849 |
| Restricted for | | | | | |
| Affordable housing | $ 99,858 | $ - | $ - | $ - | $ 99,858 |
| Capital projects | - | - | 66,000 | | 66,000 |
| Debt service | - | 2,592,779 | 2,040,000 | - | 4,632,779 |
| Economic development | - | - | - | 510,747 | 510,747 |
| Fire capital | - | - | - | 193,228 | 193,228 |
| Public safety | 249,846 | - | - | - | 249,846 |
| Total Restricted | $ 349,704 | $ 2,592,779 | $ 2,106,000 | $ 703,975 | $ 5,752,458 |
| Committed for | | | | | |
| County road 30 roundabout | $ 1,000,000 | $ - | $ - | $ - | $ 1,000,000 |
| Communications | - | - | - | 102,462 | 102,462 |
| Economic development | - | - | - | 215,421 | 215,421 |
| Street maintenance | 40,000 | - | 175,000 | - | 215,000 |
| Park maintenance | 100,000 | - | - | - | 100,000 |
| Total Committed | $ 1,140,000 | $ - | $ 175,000 | $ 317,883 | $ 1,632,883 |
| Assigned to | | | | | |
| Future capital improvements | $ - | $ - | $ 7,178,232 | $ - | $ 7,178,232 |

## Note 4: Defined Benefit Pension Plans - Statewide

### A. Plan Description

The City participates in the following cost-sharing multiple-employer defined benefit pension plans administered by the Public Employees Retirement Association of Minnesota (PERA). These plan provisions are established and administered according to Minnesota Statutes chapters 353, 353D, 353E, 353G and 356. Minnesota Statutes chapter 356 defines each plan's financial reporting requirements. PERA's defined benefit pension plans are tax qualified plans under Section 401(a) of the Internal Revenue Code.

General Employees Retirement Plan (General Plan)

Membership in the General Plan includes employees of counties, cities, townships, schools in non-certified positions, and other governmental entities whose revenues are derived from taxation, fees, or assessments. Plan membership is required for any employee who is expected to earn more than $425 in a month, unless the employee meets exclusion criteria.

Public Employees Police and Fire Plan (Police and Fire Plan)

Membership in the Police and Fire Plan includes full-time, licensed police officers and firefighters who meet the membership criteria defined in Minnesota Statutes section 353.64 and who are not earning service credit in any other PERA retirement plan or a local relief association for the same service. Employers can provide Police and Fire Plan coverage for part-time positions and certain other public safety positions by submitting a resolution adopted by the entity's governing body. The resolution must state that the position meets plan requirements.

### B. Benefits Provided

PERA provides retirement, disability, and death benefits. Benefit provisions are established by state statute and can only be modified by the state Legislature. Vested, terminated employees who are entitled to benefits, but are not receiving them yet, are bound by the provisions in effect at the time they last terminated their public service. When a member is "vested," they have earned enough service credit to receive a lifetime monthly benefit after leaving public service and reaching an eligible retirement age. Members who retire at or over their Social Security full retirement age with at least one year of service qualify for a retirement benefit.

General Employee Plan Benefits

General Employees Plan requires three years of service to vest. Benefits are based on a member's highest average salary for any five successive years of allowable service, age, and years of credit at termination of service. Two methods are used to compute benefits for General Plan members. Members hired prior to July 1, 1989, receive the higher of the Step or Level formulas. Only the Level formula is used for members hired after June 30, 1989. Under the Step formula, General Plan members receive 1.2 percent of the highest average salary for each of the first 10 years of service and 1.7 percent for each additional year. Under the Level formula, General Plan members receive 1.7 percent of highest average salary for all years of service. For members hired prior to July 1, 1989 a full retirement benefit is available when age plus years of service equal 90 and normal retirement age is 65. Members can receive a reduced requirement benefit as early as age 55 if they have three or more years of service. Early retirement benefits are reduced by .25 percent for each month under age 65. Members with 30 or more years of service can retire at any age with a reduction of 0.25 percent for each month the member is younger than age 62. The Level formula allows General Plan members to receive a full retirement benefit at age 65 if they were first hired before July 1, 1989 or at age 66 if they were hired on or after July 1, 1989. Early retirement begins at age 55 with an actuarial reduction applied to the benefit.

## Note 4: Defined Benefit Pension Plans - Statewide (Continued)

Benefit increases are provided to benefit recipients each January. The postretirement increase is equal to 50 percent of the cost-of-living adjustment (COLA) announced by the SSA, with a minimum increase of at least 1 percent and a maximum of 1.5 percent. The 2024 annual increase was 1.5 percent. Recipients that have been receiving the annuity or benefit for at least a full year as of the June 30 before the effective date of the increase will receive the full increase. Recipients receiving the annuity or benefit for at least one month but less than a full year as of the June 30 before the effective date of the increase will receive a prorated increase.

Police and Fire Plan Benefits

Benefits for Police and Fire Plan members hired before July 1, 2010, are vested after three years of service. Members hired on or after July 1, 2010, are 50 percent vested after five years of service and 100 percent vested after ten years. After five years, vesting increase by 10 percent each full year of service until members are 100 percent vested after ten years. Police and Fire Plan members receive 3 percent of highest average salary for all years of service. Police and Fire Plan members receive a full retirement benefit when they are age 55 and vested, or when their age plus their years of service equals 90 or greater if they were first hired before July 1, 1989. Early retirement starts at age 50, and early retirement benefits are reduced by 0.417 percent each month members are younger than age 55.

Benefit increases are provided to benefit recipients each January. The postretirement increase is fixed at 1 percent. Recipients that have been receiving the annuity or benefit for at least 36 months as of the June 30 before the effective date of the increase will receive the full increase. Recipients receiving the annuity or benefit for at least 25 months but less than 36 months as of the June 30 before the effective date of the increase will receive a reduced prorated increase.

### C. Contributions

Minnesota Statutes chapters 353, 353E, 353G and 356 set the rates for employer and employee contributions. Contribution rates can only be modified by the state Legislature.

General Employees Fund Contributions

General Plan members were required to contribute 6.50 percent of their annual covered salary in fiscal year 2024 and the City was required to contribute 7.50 percent for Coordinated Plan members. The City's contributions to the General Employees Fund for the years ending December 31, 2024, 2023 and 2022, were $215,952, $213,626 and $200,004, respectively. The City's contributions were equal to the required contributions for each year as set by state statute.

Police and Fire Fund Contributions

Police and Fire Plan members were required to contribute 11.80 percent of their annual covered salary in fiscal year 2024 and the City was required to contribute 17.70 percent for Police and Fire Plan members. The City's contributions to the Police and Fire Fund for the years ending December 31, 2024, 2023 and, 2022 were $264,025, $254,145 and $234,872, respectively. The City's contributions were equal to the required contributions for each year as set by state statute.

### D. Pension Costs

General Employees Fund Pension Costs

At December 31, 2024, the City reported a liability of $1,247,667 for its proportionate share of the General Employees Fund's net pension liability. The City's net pension liability reflected a reduction due to the State of Minnesota's contribution of $16 million. The State of Minnesota is considered a non-employer contributing entity and the state's contribution meets the definition of a special funding situation. The State of Minnesota's proportionate share of the net pension liability associated with the City totaled $32,262.

## Note 4: Defined Benefit Pension Plans - Statewide (Continued)

| | | |
|---|---|---|
| City's Proportionate Share of the Net Pension Liability | $ | 1,247,667 |
| State of Minnesota's Proportionate Share of the Net Pension Liability Associated with the City | | 32,262 |
| Total | $ | 1,279,929 |

The net pension liability was measured as of June 30, 2024, and the total pension liability used to calculate the net pension liability was determined by an actuarial valuation as of that date. The City's proportion of the net pension liability was based on the City's contributions received by PERA during the measurement period for employer payroll paid dates from July 1, 2023 through June 30, 2024, relative to the total employer contributions received from all of PERA's participating employers. The City's proportionate share was 0.0337 percent at the end of the measurement period and 0.0348 percent for the beginning of the period.

For the year ended December 31, 2024, the City recognized pension expense of $238,366 for its proportionate share of the General Employees Plan's pension expense. In addition, the City recognized an additional $865 as pension expense (and grant revenue) for its proportionate share of the State of Minnesota's contribution of $16 million to the General Employees Fund.

During the plan year ended June 30, 2024, the State of Minnesota contributed $170.1 million to the General Employees Fund. The State of Minnesota is not included as a non-employer contributing entity in the General Employees Plan pension allocation schedules for the $170.1 million in direct state aid because this contribution was not considered to meet the definition of a special funding situation. The City recognized $57,404 for the year ended December 31, 2024 as revenue and an offsetting reduction of net pension liability for its proportionate share of the State of Minnesota's on-behalf contributions to the General Employees Fund.

At December 31, 2024, the City reported deferred outflows of resources and deferred inflows of resources related to pensions from the following sources:

| | | Deferred Outflows of Resources | | Deferred Inflows of Resources |
|---|---|---|---|---|
| Differences Between Expected and Actual Economic Experience | $ | 118,259 | $ | - |
| Changes in Actuarial Assumptions | | 6,065 | | 482,963 |
| Net Difference Between Projected and Actual Investment Earnings | | - | | 323,392 |
| Changes in Proportion | | 23,760 | | 29,393 |
| Contributions Paid to PERA Subsequent to the Measurement Date | | 107,945 | | - |
| Total | $ | 256,029 | $ | 835,748 |

The $107,945 reported as deferred outflows of resources related to pensions resulting from the City's contributions subsequent to the measurement date will be recognized as a reduction of the net pension liability in the year ended December 31, 2025. Other amounts reported as deferred outflows and deferred inflows of resources related to pensions will be recognized in pension expense as follows:

| | | |
|---|---|---|
| 2025 | $ | (348,112) |
| 2026 | | (89,784) |
| 2027 | | (154,142) |
| 2028 | | (95,626) |

## Note 4: Defined Benefit Pension Plans - Statewide (Continued)

Police and Fire Fund Pension Costs

At December 31, 2024, the City reported a liability of $1,386,583 for its proportionate share of the Police and Fire Fund's net pension liability. The net pension liability was measured as of June 30, 2024, and the total pension liability used to calculate the net pension liability was determined by an actuarial valuation as of that date. The City's proportionate share of the net pension liability was based on the City's contributions received by PERA during the measurement period for employer payroll paid dates from July 1, 2023 through June 30, 2024, relative to the total employer contributions received from all of PERA's participating employers. The City's proportionate share was 0.1054 percent at the end of the measurement period and 0.1066 percent for the beginning of the period.

The State of Minnesota contributed $37.4 million to the Police and Fire Fund in the plan fiscal year ended June 30, 2024. The contribution consisted of $9 million in direct state aid that meets the definition of a special funding situation, additional one-time direct state aid contribution of $19.4 million, and $9 million in supplemental state aid that does not meet the definition of a special funding situation. Additionally, $9 million supplemental state aid was paid on October 1, 2024. Thereafter, by October 1 of each year, the state will pay $9 million to the Police and Fire Fund until full funding is reached or July 1, 2048, whichever is earlier. The $9 million in supplemental state aid will continue until the fund is 90 percent funded, or until the State Patrol Plan (administered by the Minnesota State Retirement System) is 90 percent funded, whichever occurs later. The State of Minnesota's proportionate share of the net pension liability associated with the City totaled $52,856.

| | |
|---|---|
| City's Proportionate Share of the Net Pension Liability | $ 1,386,583 |
| State of Minnesota's Proportionate Share of the Net Pension Liability Associated with the City | 52,856 |
| Total | $ 1,439,439 |

For the year ended December 31, 2024, the City recognized pension expense of $181,024 for its proportionate share of the Police and Fire Plan's pension expense. In addition, the City recognized an additional $5,912 as pension expense (grant revenue) for its proportionate share of the State of Minnesota's contribution of $9 million to the Police and Fire Fund.

The State of Minnesota is not included as a non-employer contributing entity in the Police and Fire Pension Plan pension allocation schedules for the $28.4 million in supplemental state aid because this contribution was not considered to meet the definition of a special funding situation. The City recognized $29,929 for the year ended December 31, 2024 as revenue and an offsetting reduction of net pension liability for its proportionate share of the State of Minnesota's on-behalf contributions to the Police and Fire Fund.

At December 31, 2024, the City reported deferred outflows of resources and deferred inflows of resources related to pensions from the following sources:

| | Deferred Outflows of Resources | Deferred Inflows of Resources |
|---|---|---|
| Differences Between Expected and Actual Economic Experience | $ 545,664 | $ - |
| Changes in Actuarial Assumptions | 1,559,011 | 2,064,566 |
| Net Difference Between Projected and Actual Investment Earnings | - | 362,855 |
| Changes in Proportion | 125,220 | 15,289 |
| Contributions Paid to PERA Subsequent to the Measurement Date | 130,916 | - |
| Total | $ 2,360,811 | $ 2,442,710 |

## Note 4: Defined Benefit Pension Plans - Statewide (Continued)

The $130,916 reported as deferred outflows of resources related to pensions resulting from City contributions subsequent to the measurement date will be recognized as a reduction of the net pension liability in the year ended December 31, 2025. Other amounts reported as deferred outflows and inflows of resources related to pensions will be recognized in pension expense as follows:

| | |
|---|---|
| 2025 | $ 39,348 |
| 2026 | 417,056 |
| 2027 | (153,816) |
| 2028 | (547,355) |
| 2029 | 31,952 |

**E. Long-term Expected Return on Investment**

The State Board of Investment, which manages the investments of PERA, prepares an analysis of the reasonableness on a regular basis of the long-term expected rate of return using a building-block method in which best-estimate ranges of expected future rates of return are developed for each major asset class. These ranges are combined to produce an expected long-term rate of return by weighting the expected future rates of return by the target asset allocation percentages. The target allocation and best estimates of geometric real rates of return for each major asset class are summarized in the following table:

| Asset Class | Target Allocation | Long-term Expected Return on Investment |
|---|---|---|
| Domestic Equity | 33.5 % | 5.10 % |
| International Equity | 16.5 | 5.30 |
| Fixed Income | 25.0 | 0.75 |
| Private Markets | 25.0 | 5.90 |
| Total | 100.0 % | |

## Note 4: Defined Benefit Pension Plans - Statewide (Continued)

**F. Actuarial Assumptions**

The total pension liability for each of the cost-sharing defined benefit plans was determined by an actuarial valuation as of June 30, 2024, using the entry age normal actuarial cost method. The long-term rate of return on pension plan investments used to determine the total liability is 7.0%. The 7.0% assumption is based on a review of inflation and investment return assumptions from a number of national investment consulting firms. The review provided a range of investment return rates considered reasonable by the actuary. An investment return of 7.0% is within that range.

Inflation is assumed to be 2.25% for the General Employees Plan and Police and Fire Plan.

Benefit increases after retirement are assumed to be 1.25% for the General Employees Plan and 1.0% for the Police and Fire Plan.

Salary growth assumptions in the General Employees Plan range in annual increments from 10.25% after one year of service to 3.0% after 27 years of service. In the Police and Fire Plan, salary growth assumptions range in annual increments from 11.75% after one year of service to 3.0% after 24 years of service.

Mortality rates for the General Employees Plan are based on the Pub-2010 General Employee Mortality Table. Mortality rates for the Police and Fire Plan are based on the Pub-2010 Public Safety Employee Mortality tables. The tables are adjusted slightly to fit PERA's experience.

Actuarial assumptions for the General Employees Plan are reviewed every four years. The General Employees Plan was last reviewed in 2022. The assumption changes were adopted by the board and became effective with the July 1, 2023 actuarial valuation. The Police and Fire Plan were reviewed in 2024. PERA anticipates the experience study will be approved by the Legislative Commission on Pensions and Retirement and become effective with the July 1, 2025

The following changes in actuarial assumptions and plan provisions occurred in 2024:

<u>General Employees Fund</u>

Changes in Actuarial Assumptions

- Rates of merit and seniority were adjusted, resulting in slightly higher rates.
- Assumed rates of retirement were adjusted as follows: increase the rate of assumed unreduced retirements, slight adjustments to Rule of 90 retirement rates, and slight adjustments to early retirement rates for Tier 1 and Tier 2 members.
- Minor increase in assumed withdrawals for males and females.
- Lower rates of disability.
- Continued use of Pub-2010 general mortality table with slight rate adjustments as recommended in the most recent experience study.
- Minor changes to form of payment assumptions for male and female retirees.
- Minor changes to assumptions made with respect to missing participant data.

Changes in Plan Provisions

- The workers' compensation offset for disability benefits was eliminated. The actuarial equivalent factors updated to reflect the changes in assumptions.

## Note 4: Defined Benefit Pension Plans - Statewide (Continued)

Police and Fire Fund

Changes in Actuarial Assumptions

- There were no changes in actuarial assumptions since the previous valuation.

Changes in Plan Provisions

- The State contribution of $9 million per year will continue until the earlier of 1) both the Police and Fire Plan and the State Patrol Retirement Fund attain 90.0 percent funded status for three consecutive years (on an actuarial value of assets basis) or 2) July 1, 2048. The contribution was previously due to expire after attaining a 90.0 percent funded status for one year.
- The additional $9 million contribution will continue until the Police and Fire Plan is fully funded for a minimum of three consecutive years on an actuarial value of assets basis, or July 1, 2048, whichever is earlier. This contribution was previously due to expire upon attainment of fully funded status on an actuarial value of assets basis for one year (or July 1, 2048 if earlier).

**G. Discount Rate**

The discount rate used to measure the total pension liability in 2024 was 7.0 percent. The projection of cash flows used to determine the discount rate assumed that contributions from plan members and employers will be made at rates set in Minnesota Statutes. Based on these assumptions, the fiduciary net position of the General Employees and Police and Fire Plans were projected to be available to make all projected future benefit payments of current plan members. Therefore, the long-term expected rate of return on pension plan investments was applied to all periods of projected benefit payments to determine the total pension liability.

**H. Pension Liability Sensitivity**

The following presents the City's proportionate share of the net pension liability for all plans it participates in, calculated using the discount rate disclosed in the preceding paragraph, as well as what the City's proportionate share of the net pension liability would be if it were calculated using a discount rate one percentage point lower or one percentage point higher than the current discount rate:

| | 1 Percent Decrease (6.0%) | Current (7.0%) | 1 Percent Increase (8.0%) |
|---|---|---|---|
| General Employees Fund | $ 2,725,105 | $ 1,247,667 | $ 32,339 |
| Police and Fire Fund | 3,276,767 | 1,386,583 | (165,653) |

**I. Pension Plan Fiduciary Net Position**

Detailed information about each pension plan's fiduciary net position is available in a separately issued PERA financial report that includes financial statements and required supplementary information. That report may be obtained on the Internet at www.mnpera.org.

## Note 5: Defined Benefit Pension Plans - Volunteer Fire Relief Association

### A. Plan Description

All members of the City's Fire Department (the Department) are covered by a defined benefit plan administered by the North Branch Firefighter's Relief Association (the Association). As of December 31, 2023, the plan covered 33 active firefighters and 45 vested terminated, retirees and beneficiaries fire fighters whose pension benefits are deferred. The plan is a single employer defined benefit retirement plan and is established and administered in accordance with *Minnesota statute*, chapter 69.

The Association maintains a separate Special fund to accumulate assets to fund the retirement benefits earned by the Department's membership. Funding for the Association is derived from an insurance premium tax in accordance with the Volunteer Firefighter's Relief Association Financing Guidelines Act of 1971 (chapter 261 as amended by chapter 509 of Minnesota statutes 1980). Funds are also derived from investment income.

### B. Benefits Provided

Full retirement benefits are payable to member who have reached age 50 and have completed 15 years of service for monthly service pensions, or 10 years of service for lump sum service pensions. Partial benefits are payable to member who have reached age 50 and have completed 10 years of service. Disability benefits and widow and children survivor benefits are also payable to member, or their beneficiaries based upon requirements set forth in the bylaws. These benefit provisions and all other requirements are consistent with enabling State Statutes.

### C. Contributions

*Minnesota statutes*, chapters 424 and 424A authorize pension benefits for volunteer fire relief associations. The plan is funded by fire state aid, investment earnings and, if necessary, employer contributions as specified in *Minnesota statutes* and voluntary City contributions (if applicable). The State of Minnesota contributed $120,734 in fire state aid to the plan on behalf of the City Fire Department for the year ended December 31, 2024, which was recorded as a revenue. Required employer contributions are calculated annually based on statutory provisions. The City's statutorily required contributions to the plan for the year ended December 31, 2024 were equal to the above. In addition, the City made voluntary contributions to the plan in the amount of $1,600.

## Note 5: Defined Benefit Pension Plans - Volunteer Fire Relief Association (Continued)

### D. Pension Costs

At December 31, 2024, the City reported a net pension liability of negative $376,094 for the Volunteer Firefighter Fund. The net pension liability was measured as of December 31, 2023. The total pension liability used to calculate the net pension liability in accordance with GASB 68 was determined by Hildi, Inc. applying an actuarial formula to specific census data certified by the Department. The following table presents the changes in the net pension liability (asset) during the year.

| | Total Pension Liability (a) | Plan Fiduciary Net Position (b) | Net Pension Asset (a-b) |
|---|---|---|---|
| Beginning Balance January 1, 2023 | $ 950,647 | $ 1,316,598 | $ (365,951) |
| Changes for the Year | | | |
| Service cost | 33,544 | - | 33,544 |
| Interest cost | 58,345 | - | 58,345 |
| Plan changes | 176,128 | - | 176,128 |
| Nonemployer contributions | - | 103,201 | (103,201) |
| Projected investment return | - | 81,974 | (81,974) |
| Gain or loss | - | 104,868 | (104,868) |
| Benefit payments | (101,333) | (101,333) | - |
| Administrative expenses | - | (11,883) | 11,883 |
| Total Net Changes | 166,684 | 176,827 | (10,143) |
| Ending Balance December 31, 2023 | $ 1,117,331 | $ 1,493,425 | $ (376,094) |

For the year ended December 31, 2024, the City recognized pension expense of $49,947.

At December 31, 2024, the City reported deferred outflows of resources and its contributions subsequent to the measurement date related to pension from the following sources:

| | Deferred Outflows of Resources | Deferred Inflows of Resources |
|---|---|---|
| Differences Between Expected and Actual Experience | $ - | $ 60,049 |
| Changes in Actuarial Assumptions | 3,253 | 9,167 |
| Net Difference Between Projected and Actual Earnings on Plan Investments | 24,497 | - |
| Contributions to Plan Subsequent to the Measurement Date | 122,334 | - |
| Total | $ 150,084 | $ 69,216 |

## Note 5: Defined Benefit Pension Plans - Volunteer Fire Relief Association (Continued)

Deferred outflows of resources totaling $122,334 related to pensions resulting from the City's contributions to the plan subsequent to the measurement date will be recognized as a reduction of the net pension liability in the year ended December 31, 2025. Other amounts reported as deferred outflows of resources related to the plan will be recognized in pension expense as follows:

| | |
|---|---|
| 2024 | $ (18,736) |
| 2025 | 2,370 |
| 2026 | 24,850 |
| 2027 | (31,028) |
| 2028 | (9,465) |
| Thereafter | (9,457) |

### E. Actuarial Assumptions

The total pension liability at December 31, 2024 was determined using the entry age normal actuarial cost method and the following actuarial assumptions:

The long-term expected rate of return on pension plan investments was determined using a building-block method in which best estimates for expected future real rates of return (expected returns, net of inflation) were developed for each asset class using the plan's target investment allocation along with long-term return expectations by asset class. Inflation expectations were applied to derive the nominal rate of return for the portfolio.

The target allocation and best estimates of geometric real rates of return for each major asset class are summarized in the following table:

| Asset Class | Target Allocation | Long-term Expected Real Rate of Return |
|---|---|---|
| Cash and Equivalents | 11.00 % | 2.00 % |
| Fixed Income | 24.00 | 3.90 |
| Equities | 65.00 | 7.80 |
| Total | 100.00 % | |

### F. Discount Rate

The discount rate used to measure the total pension liability was 6.25 percent. The projection of cash flows used to determine the discount rate assumed that contributions to the plan will be made as specified in statute. Based on that assumption and considering the funding ratio of the plan, the fiduciary net position was projected to be available to make all projected future benefit payments of current active and inactive members. Therefore, the long-term expected rate of return on pension plan investments was applied to all periods of projected benefit payments to determine the total pension liability.

## Note 5: Defined Benefit Pension Plans - Volunteer Fire Relief Association (Continued)

### G. Pension Liability Sensitivity

The following presents the City's net pension liability (asset) for the plan, calculated using the discount rate disclosed in the preceding paragraph, as well as what the City's net pension liability (asset) would be if it were calculated using a discount rate one percent lower or one percent higher than the current discount rate:

| | 1 Percent Decrease (5.25%) | Current (6.25%) | 1 Percent Increase (7.25%) |
|---|---|---|---|
| Defined Benefit Plan | $ (352,544) | $ (376,094) | $ (398,012) |

### H. Pension Plan Fiduciary Net Position

The Association issues a publicly available financial report. The report may be obtained at the North Branch City Hall at 6408 Elm Street, North Branch, Minnesota 55056.

## Note 6: Defined Contribution Plan

The City has City Council members that are covered by the Defined Contribution Plan (DCP), a multiple-employer deferred compensation plan administered by PERA. The DCP is a tax qualified plan under Section 401(a) of the Internal Revenue Code and all contributions by or on behalf of employees are tax deferred until time of withdrawal.

Total contributions made by the City During the fiscal year 2024 were:

| Contribution Amount | | Percentage of Covered Payroll | | |
|---|---|---|---|---|
| Employee | Employer | Employee | Employer | Required Rate |
| $ 600 | $ 600 | 5.00% | 5.00% | 5.00% |

## Note: 7 Post-employment Benefits Other Than Pensions

### A. Plan Description

The City of North Branch administers a single-employer defined benefit healthcare plan (“the Retiree Health Plan”). The plan provides healthcare insurance for eligible retirees and their spouses through the City's group health insurance plan, which covers both active and retired members. Benefit provisions are established through negotiations between the City and the union representing City employees and are renegotiated as changes arise. The Retiree Health Plan does not issue a publicly available report and is not administered through a trust or equivalent arrangement and thus there are no assets accumulated in a GASB-compliant trust.

At December 31, 2024, the following employees were covered by the benefit terms:

| | |
|---|---|
| Inactive Plan Members or Beneficiaries Currently Receiving Benefit Payments | 1 |
| Active Plan Members | 30 |
| Total Plan Members | 31 |

### B. Funding Policy

The City has historically funded these liabilities on a pay-as-you-go basis. Contribution requirements are negotiated between the City and union representatives every three years or as changes arise. The City contributes none of the cost of current-year premiums for eligible retired plan members and their spouses.

For the year ended December 31, 2024, the City's average contribution rate was 7.1 percent of covered-employee payroll. For the fiscal year 2024, the City did not directly contribute to the plan, while implicit contributions totaled $11,564. The General fund is typically used to liquidate the governmental portion of the net OPEB obligation.

### C. Actuarial Methods and Assumptions

The City’s total OPEB liability of $206,142 was measured as of January 1, 2024, and the OPEB liability was determined by an actuarial valuation as of January 1, 2023.

The total OPEB liability in the January 1, 2023 actuarial valuation was determined using the following actuarial assumptions, applied to all periods included in the measurement, unless otherwise specified:

| | |
|---|---|
| Discount Rate | 4.00% |
| Expected Long-Term Investment Return | N/A |
| 20-Year Municipal Bond Yield | 4.00% |
| Inflation Rate | 2.50% |
| Salary Increases | Service graded table, see sample rates |
| Medical Trend Rate | 6.25% as of January 1, 2024 grading to 5.00% over 6 year, and then to 4.00% over the next 48 years. |

## Note: 7 Post-employment Benefits Other Than Pensions (Continued)

Economic assumptions are based on input from a variety of published sources of historical and projected future financial data. Each assumption was reviewed for reasonableness with the source information as well as for consistency with the other economic assumptions.

**D. Changes in the Total OPEB Liability**

| | Total OPEB Liability |
|---|---|
| Balances at December 31, 2023 | $ 189,943 |
| Changes for the Year | |
| Service Cost | 16,415 |
| Interest Cost | 8,090 |
| Benefit Payments | (8,306) |
| Net Changes | 16,199 |
| Balances at December 31, 2024 | $ 206,142 |

Since the prior measurement date, the following assumptions changed:

- None

Since the prior measurement date, the following plan provisions changed:

- None

Since the prior measurement date, the following benefit terms changed:

- None

**E. Sensitivity of the Net OPEB Liability**

The following presents the net OPEB liability of the City, as well as what the City's net OPEB liability would be if it were calculated using a discount rate one percentage point lower or one percentage point higher than the current discount rate:

| 1 Percent Decrease 3% | Discount Rate Current 4% | 1 Percent Increase 5% |
|---|---|---|
| $ 218,741 | $ 206,142 | $ 194,242 |

The following presents the City's net OPEB liability, as well as what the City's net OPEB liability would be if it were calculated using a healthcare cost trend rate one percentage point lower or one percentage point higher than the current healthcare cost trend rate:

| 1 Percent Decrease 5.25% Decreasing to 4.00% then 3.00% | Healthcare Cost Trend Rates 6.25% Decreasing to 5.00% then 4.00% | 1 Percent Increase 7.25% Decreasing to 6.00% then 5.00% |
|---|---|---|
| $ 187,183 | $ 206,142 | $ 228,044 |

## Note: 7 Post-employment Benefits Other Than Pensions (Continued)

### F. OPEB Expense and Deferred Outflows of Resources and Deferred Inflows of Resources Related to OPEB

For the year ended December 31, 2024, the City Recognized OPEB expense of $185,947. At December 31, 2024, the City reported deferred outflows of resources and deferred inflows of resources related to OPEB from the following sources:

| | Deferred Outflows of Resources | Deferred Inflows of Resources |
|---|---|---|
| Differences Between Expected and Actual Economic Experience | $ 18,124 | $ 2,508 |
| Changes in Actuarial Assumptions | 3,503 | 10,490 |
| Contributions Paid to OPEB Subsequent to the Measurement Date | 11,564 | - |
| Total | $ 33,191 | $ 12,998 |

Deferred outflows of resources totaling $11,564 related to pensions resulting from the City's contributions to OPEB subsequent to the measurement date will be recognized as a reduction of the OPEB liability as of December 31, 2025. Other amounts reported as deferred outflows and inflows of resources related to OPEB will be recognized in pension expense as follows:

| | |
|---|---|
| 2025 | $ 2,026 |
| 2026 | 2,023 |
| 2027 | 1,527 |
| 2028 | 1,527 |
| 2029 | 1,526 |

## Note 8: Other Information

### A. Risk Management

The City is exposed to various risks of loss related to torts; theft of, damage to and destruction of assets; errors and omissions; injuries to employees; and natural disasters for which the City carries insurance. The City participates in the League of Minnesota Cities Insurance Trust (LMCIT), a public entity risk pool for its general property and casualty, workers' compensation and other miscellaneous insurance coverage. LMCIT operates as a common risk management and insurance program for member cities. The City pays an annual premium to LMCIT for insurance coverage. The LMCIT agreement provides that LMCIT with be self-sustaining through member premiums and will reinsure through commercial companies for claims in excess of certain limits for each insured event.

The City also carries commercial insurance for certain other risks of loss, including liquor liability and employee health insurance. Settled claims resulting from these risks have not exceeded commercial insurance coverage in any of the past three years. There were no significant reductions in insurance coverage during 2024.

### B. Legal Debt Margin

In accordance with Minnesota statutes, the City may not incur or be subject to net debt in excess of three percent of the estimated market value of taxable property within the City. Net debt is payable solely from ad valorem taxes and, therefore, excludes debt financed partially or entirely by special assessments, enterprise fund revenues, or tax increments. As of December 31, 2024, the City is under the legal debt margin.

REQUIRED SUPPLEMENTARY INFORMATION

CITY OF NORTH BRANCH
NORTH BRANCH, MINNESOTA

FOR THE YEAR ENDED
DECEMBER 31, 2024

**Schedule of Employer's Share of PERA Net Pension Liability - General Employee Retirement Fund**

| Fiscal Year Ending | City's Proportion of the Net Pension Liability | City's Proportionate Share of the Net Pension Liability (a) | State's Proportionate Share of the Net Pension Liability Associated with the City (b) | Total (a+b) | City's Covered Payroll (c) | City's Proportionate Share of the Net Pension Liability as a Percentage of Covered Payroll (a/c) | Plan Fiduciary Net Position as a Percentage of the Total Pension Liability |
|---|---|---|---|---|---|---|---|
| 6/30/2024 | 0.0337 % | $ 1,247,667 | $ 32,262 | $ 1,279,929 | $ 2,864,276 | 43.6 % | 86.7 % |
| 6/30/2023 | 0.0348 | 1,945,978 | 53,705 | 1,999,683 | 2,757,533 | 70.6 | 83.1 |
| 6/30/2022 | 0.0336 | 2,661,131 | 78,050 | 2,739,181 | 2,419,160 | 199.6 | 76.7 |
| 6/30/2021 | 0.0293 | 1,251,241 | 38,217 | 1,289,458 | 2,276,560 | 55.0 | 87.0 |
| 6/30/2020 | 0.0264 | 1,582,801 | 48,783 | 1,631,584 | 1,987,227 | 79.6 | 79.0 |
| 6/30/2019 | 0.0263 | 1,454,068 | 45,165 | 1,499,233 | 1,871,680 | 77.7 | 80.2 |
| 6/30/2018 | 0.0241 | 1,336,969 | 43,872 | 1,380,841 | 1,609,680 | 83.1 | 79.5 |
| 6/30/2017 | 0.0225 | 1,436,385 | 18,083 | 1,454,468 | 1,472,307 | 97.6 | 75.9 |
| 6/30/2016 | 0.0198 | 1,607,662 | 20,997 | 1,628,659 | 1,318,227 | 122.0 | 68.9 |
| 6/30/2015 | 0.0183 | 948,401 | - | 948,401 | 1,145,120 | 82.8 | 78.2 |

**Schedule of Employer's PERA Contributions - General Employee Retirement Fund**

| Year Ending | Statutorily Required Contribution (a) | Contributions in Relation to the Statutorily Required Contribution (b) | Contribution Deficiency (Excess) (a-b) | City's Covered Payroll (c) | Contributions as a Percentage of Covered Payroll (b/c) |
|---|---|---|---|---|---|
| 12/31/2024 | $ 215,952 | $ 215,952 | $ - | $ 2,879,366 | 7.50 % |
| 12/31/2023 | 213,626 | 213,626 | - | 2,848,347 | 7.50 |
| 12/31/2022 | 200,004 | 200,004 | - | 2,666,720 | 7.50 |
| 12/31/2021 | 170,742 | 170,742 | - | 2,276,560 | 7.50 |
| 12/31/2020 | 149,042 | 149,042 | - | 1,987,227 | 7.50 |
| 12/31/2019 | 140,376 | 140,376 | - | 1,871,680 | 7.50 |
| 12/31/2018 | 120,726 | 120,726 | - | 1,609,680 | 7.50 |
| 12/31/2017 | 110,423 | 110,423 | - | 1,472,307 | 7.50 |
| 12/31/2016 | 98,867 | 98,867 | - | 1,318,227 | 7.50 |
| 12/31/2015 | 85,884 | 85,884 | - | 1,145,120 | 7.50 |

**Notes to the Required Supplementary Information - General Employee Retirement Fund**

Changes in Actuarial Assumptions

2024 - The following changes in assumptions are effective with the July 1, 2024 valuation, as recommended in the most recent experience study (dated June 29, 2023): Rates of merit and seniority were adjusted, resulting in slightly higher rates. Assumed rates of retirement were adjusted as follows: increase the rate of assumed unreduced retirements, slight adjustments to Rule of 90 retirement rates, and slight adjustments to early retirement rates for Tier 1 and Tier 2 members. Minor increase in assumed withdrawals for males and females. Lower rates of disability. Continued use of Pub-2010 general mortality table with slight rate adjustments as recommended in the most recent experience study. Minor changes to form of payment assumptions for male and female retirees. Minor changes to assumptions made with respect to missing participant data.

2023 - The investment return and single discount rates were changed from 6.5 percent to 7.0 percent.

2022 - The mortality improvement scale was changed from Scale MP-2020 to Scale MP-2021.

2021 - The investment return and single discount rates were changed from 7.50 percent to 6.50 percent, for financial reporting purposes. The mortality improvement scale was changed from Scale MP-2019 to Scale MP-2020.

2020 - The price inflation assumption was decreased from 2.50% to 2.25%. The payroll growth assumption was decreased from 3.25% to 3.00%. Assumed salary increase rates were changed as recommended in the June 30, 2019 experience study. The net effect is assumed rates that average 0.25% less than previous rates. Assumed rates of retirement were changed as recommended in the June 30, 2019 experience study. The changes result in more unreduced (normal) retirements and slightly fewer Rule of 90 and early retirements. Assumed rates of termination were changed as recommended in the June 30, 2019 experience study. The new rates are based on service and are generally lower than the previous rates for years 2-5 and slightly higher thereafter. Assumed rates of disability were changed as recommended in the June 30, 2019 experience study. The change results in fewer predicted disability retirements for males and females. The base mortality table for healthy annuitants and employees was changed from the RP-2014 table to the Pub-2010 General Mortality table, with adjustments. The base mortality table for disabled annuitants was changed from the RP-2014 disabled annuitant mortality table to the PUB-2010 General/Teacher disabled annuitant mortality table, with adjustments. The mortality improvement scale was changed from Scale MP-2018 to Scale MP-2019. The assumed spouse age difference was changed from two years older for females to one year older. The assumed number of married male new retirees electing the 100% Joint & Survivor option changed from 35% to 45%. The assumed number of married female new retirees electing the 100% Joint & Survivor option changed from 15% to 30%. The corresponding number of married new retirees electing the Life annuity option was adjusted accordingly.

2019 - The mortality projection scale was changed from MP-2017 to MP-2018.

2018 - The mortality projection scale was changed from MP-2015 to MP-2017. The assumed benefit increase was changed from 1.00 percent per year through 2044 and 2.50 percent per year thereafter to 1.25 percent per year.

2017 - The Combined Service Annuity (CSA) loads were changed from 0.8 percent for active members and 60 percent for vested and non-vested deferred members. The revised CSA loads are now 0.0 percent for active member liability, 15.0 percent for vested deferred member liability and 3.0 percent for non-vested deferred member liability. The assumed post-retirement benefit increase rate was changed from 1.0 percent per year for all years to 1.0 percent per year through 2044 and 2.5 percent per year thereafter.

2016 - The assumed post-retirement benefit increase rate was changed from 1.0 percent per year through 2035 and 2.5 percent per year thereafter to 1.0 percent per year for all future years. The assumed investment return was changed from 7.9 percent to 7.5 percent. The single discount rate was changed from 7.9 percent to 7.5 percent. Other assumptions were changed pursuant to the experience study dated June 30, 2015. The assumed future salary increases, payroll growth and inflation were decreased by 0.25 percent to 3.25 percent for payroll growth and 2.50 percent for inflation.

2015 - The assumed post-retirement benefit increase rate was changed from 1.0 percent per year through 2030 and 2.5 percent per year thereafter to 1.0 percent per year through 2035 and 2.5 percent per year thereafter.

**Notes to the Required Supplementary Information - General Employee Retirement Fund (Continued)**

Changes in Plan Provisions

2024 - The workers' compensation offset for disability benefits was eliminated. The actuarial equivalent factors updated to reflect the changes in assumptions.

2023 - An additional one-time direct state aid contribution of $170.1 million will be contributed to the Plan on October 1, 2023. The vesting period of those hired after June 30, 2010, was changed from five years of allowable service to three years of allowable service. The benefit increase delay for early retirements on or after January 1, 2024 was eliminated. A one-time non-compounding benefit increase of 2.5 percent minus the actual 2024 adjustment will be payable in a lump sum for calendar year 2024 by March 31, 2024.

2022 - There were no changes in plan provisions since the previous valuation.

2021 - There were no changes in plan provisions since the previous valuation.

2020 - Augmentation for current privatized members was reduced to 2.0% for the period July 1, 2020 through December 31, 2023 and 0.0% after. Augmentation was eliminated for privatizations occurring after June 30, 2020.

2019 - The employer supplemental contribution was changed prospectively, decreasing from $31.0 million to $21.0 million per year. The state's special funding contribution was changed prospectively, requiring $16.0 million due per year through 2031.

2018 - The augmentation adjustment in early retirement factors is eliminated over a five-year period starting July 1, 2019, resulting in actuarial equivalence after June 30, 2024. Interest credited on member contributions decreased from 4.0 percent to 3.0 percent, beginning July 1, 2018. Deferred augmentation was changed to 0.0 percent, effective January 1, 2019. Augmentation that has already accrued for deferred members will still apply. Contribution stabilizer provisions were repealed. Postretirement benefit increases were changed from 1.0 percent per year with a provision to increase to 2.5 percent upon attainment of 90.0 percent funding ratio to 50.0 percent of the Social Security Cost of Living Adjustment, not less than 1.0 percent and not more than 1.5 percent, beginning January 1, 2019. For retirements on or after January 1, 2024, the first benefit increase is delayed until the retiree reaches normal retirement age; does not apply to Rule of 90 retirees, disability benefit recipients, or survivors. Actuarial equivalent factors were updated to reflect revised mortality and interest assumptions.

2017 - The State's contribution for the Minneapolis Employees Retirement Fund equals $16,000,000 in 2017 and 2018, and $6,000,000 thereafter. The Employer Supplemental Contribution for the Minneapolis Employees Retirement Fund changed from $21,000,000 to $31,000,000 in calendar years 2019 to 2031. The state's contribution changed from $16,000,000 to $6,000,000 in calendar years 2019 to 2031.

2016 - There were no changes in plan provisions since the previous valuation.

2015 - On January 1, 2015, the Minneapolis Employees Retirement Fund was merged into the General Employees Fund, which increased the total pension liability by $1.1 billion and increased the fiduciary plan net position by $892 million. Upon consolidation, state and employer contributions were revised.

**Schedule of Employer's Share of PERA Net Pension Liability - Police and Fire Fund**

| Fiscal Year Ending | City's Proportion of the Net Pension Liability | City's Proportionate Share of the Net Pension Liability (a) | State's Proportionate Share of the Net Pension Liability Associated with the City (b) | Total (a+b) | City's Covered Payroll (c) | City's Proportionate Share of the Net Pension Liability as a Percentage of Covered Payroll (a/c) | Plan Fiduciary Net Position as a Percentage of the Total Pension Liability |
|---|---|---|---|---|---|---|---|
| 6/30/2024 | 0.1054 % | $ 1,386,583 | $ 52,856 | $ 1,439,439 | $ 1,469,950 | 94.3 % | 87.0 % |
| 6/30/2023 | 0.1066 | 1,840,843 | 74,155 | 1,914,998 | 1,381,404 | 133.3 | 86.5 |
| 6/30/2022 | 0.1019 | 4,434,285 | 193,802 | 4,628,087 | 1,224,795 | 668.3 | 70.5 |
| 6/30/2021 | 0.0949 | 732,527 | 32,910 | 765,437 | 1,167,797 | 62.7 | 93.7 |
| 6/30/2020 | 0.0930 | 1,225,840 | 28,881 | 1,254,721 | 1,073,023 | 114.2 | 87.2 |
| 6/30/2019 | 0.0935 | 995,402 | - | 995,402 | 974,226 | 102.2 | 89.3 |
| 6/30/2018 | 0.0829 | 883,629 | - | 883,629 | 799,644 | 110.5 | 88.8 |
| 6/30/2017 | 0.0800 | 1,080,095 | - | 1,080,095 | 760,548 | 142.0 | 85.4 |
| 6/30/2016 | 0.0710 | 2,849,354 | - | 2,849,354 | 693,322 | 411.0 | 63.9 |
| 6/30/2015 | 0.0710 | 818,088 | - | 818,088 | 642,588 | 127.3 | 86.6 |

**Schedule of Employer's PERA Contributions - Police and Fire Fund**

| Year Ending | Statutorily Required Contribution (a) | Contributions in Relation to the Statutorily Required Contribution (b) | Contribution Deficiency (Excess) (a-b) | City's Covered Payroll (c) | Contributions as a Percentage of Covered Payroll (b/c) |
|---|---|---|---|---|---|
| 12/31/2024 | $ 264,025 | $ 264,025 | $ - | $ 1,491,664 | 17.70 % |
| 12/31/2023 | 254,145 | 254,145 | - | 1,435,847 | 17.70 |
| 12/31/2022 | 234,872 | 234,872 | - | 1,326,960 | 17.70 |
| 12/31/2021 | 206,700 | 206,700 | - | 1,167,797 | 17.70 |
| 12/31/2020 | 189,925 | 189,925 | - | 1,073,023 | 17.70 |
| 12/31/2019 | 172,438 | 172,438 | - | 974,226 | 17.70 |
| 12/31/2018 | 141,537 | 141,537 | - | 799,644 | 17.70 |
| 12/31/2017 | 134,617 | 134,617 | - | 760,548 | 17.70 |
| 12/31/2016 | 122,718 | 122,718 | - | 693,322 | 17.70 |
| 12/31/2015 | 113,738 | 113,738 | - | 642,588 | 17.70 |

**Notes to the Required Supplementary Information - Police and Fire Fund**

Changes in Actuarial Assumptions

2024 - There were no changes in actuarial assumptions since the previous valuation.

2023 - The investment return assumption was changed from 6.5 percent to 7.0 percent. The single discount rate changed from 5.4 percent to 7.0 percent.

2022 - The mortality improvement scale was changed from Scale MP-2020 to Scale MP-2021. The single discount rate changed from 6.50 percent to 5.40 percent.

2021 - The investment return and single discount rates were changed from 7.5 percent to 6.5 percent, for financial reporting purposes. The inflation assumption was changed from 2.5 percent to 2.25 percent. The payroll growth assumption was changed from 3.25 percent to 3.0 percent. The base mortality table for healthy annuitants and employees was changed from the RP-2014 table to the Pub-2010 Public Safety Mortality table. The mortality improvement scale was changed from MP-2019 to MN-2020. The base mortality table for disabled annuitants was changed from the RP-2014 healthy annuitant mortality table (with future mortality improvement according to Scale MP-2019) to the Pub-2010 Public Safety disabled annuitant mortality table (with future mortality improvement according to Scale MP-2020). Assumed rates of salary increase were modified as recommended in the July 14, 2020 experience study. The overall impact is a decrease in gross salary increase rates. Assumed rates of retirement were changed as recommended in the July 14, 2020 experience study. The changes result in slightly more unreduced retirements and fewer assumed early retirements. Assumed rates of withdrawal were changed from select and ultimate rates to service-based rates. The changes result in more assumed terminations. Assumed rates of disability were increased for ages 25-44 and decreased for ages over 49. Overall, proposed rates result in more projected disabilities. Assumed percent married for active female members was changed from 60.0 percent to 70.0 percent. Minor changes to form of payment assumptions were applied.

2020 - The mortality projection scale was changed from MP-2018 to MP-2019.

2019 - The mortality projection scale was changed from MP-2017 to MP-2018.

2018 - The mortality projection scale was changed from MP-2016 to MP-2017.

2017 - Assumed salary increases were changed as recommended in the June 30, 2016 experience study. The net effect is proposed rates that average 0.34 percent lower than the previous rates. Assumed rates of retirement were changed, resulting in fewer retirements. The Combined Service Annuity (CSA) load was 30 percent for vested and non-vested deferred members. The CSA has been changed to 33 percent for vested members and 2 percent for non-vested members. The base mortality table for healthy annuitants was changed from the RP-2000 fully generational table to the RP-2014 fully generational table (with a base year of 2006), with male rates adjusted by a factor of 0.96. The mortality improvement scale was changed from Scale AA to Scale MP-2016. The base mortality table for disabled annuitants was changed from the RP-2000 disabled mortality table to the mortality tables assumed for healthy retirees. Assumed termination rates were decreased to 3.0 percent for the first three years of service. Rates beyond the select period of three years were adjusted, resulting in more expected terminations overall. Assumed percentage of married female members was decreased from 65 percent to 60 percent. Assumed age difference was changed from separate assumptions for male members (wives assumed to be three years younger) and female members (husbands assumed to be four years older) to the assumption that males are two years older than females. The assumed percentage of female members electing joint and survivor annuities was increased. The assumed post-retirement benefit increase rate was changed from 1.0 percent for all years to 1.0 percent per year through 2064 and 2.5 percent thereafter. The single discount rate was changed from 5.6 percent to 7.5 percent.

2016 - The assumed post-retirement benefit increase rate was changed from 1.0 percent per year through 2037 and 2.5 percent per year thereafter to 1.0 percent per year for all future years. The assumed investment return was changed from 7.9 percent to 7.5 percent. The single discount rate was changed from 7.9 percent to 5.6 percent. The assumed future salary increases, payroll growth and inflation were decreased by 0.25 percent to 3.25 percent for payroll growth and 2.5 percent for inflation.

2015 - The assumed post-retirement benefit increase rate was changed from 1.0 percent per year through 2030 and 2.5 percent per year

**Notes to the Required Supplementary Information - Police and Fire Fund (Continued)**

Changes in Plan Provisions

2024 - The State contribution of $9.0 million per year will continue until the earlier of 1) both the Police and Fire Plan and the State Patrol Retirement Fund attain 90.0 percent funded status for three consecutive years (on an actuarial value of assets basis) or 2) July 1, 2048. The contribution was previously due to expire after attaining a 90.0 percent funded status for one year. The additional $9.0 million contribution will continue until the Police and Fire Plan is fully funded for a minimum of three consecutive years on an actuarial value of assets basis, or July 1, 2048, whichever is earlier. This contribution was previously due to expire upon attainment of fully funded status on an actuarial value of assets basis for one year (or July 1, 2048 if earlier).

2023 - An additional one-time direct state aid contribution of $19.4 million will be contributed to the Plan on October 1, 2023. The vesting requirement for new hires after June 30, 2014 was changed from a graded 20-year vesting schedule to a graded 10-year vesting schedule, with 50 percent vesting after five years increasing incrementally to 100 percent after 10 years. A one-time non-compounding benefit increase of 3.0 percent will be payable in a lump sum for calendar year 2024 by March 31, 2024. Psychological treatment is required effective July 1, 2023 prior to approval for a duty disability benefit for a psychological condition relating to the member's occupation. The total and permanent duty disability was increased, effective July 1, 2023.

2022 - There were no changes in plan provisions since the previous valuation.

2021 - There were no changes in plan provisions since the previous valuation.

2020 - There were no changes in plan provisions since the previous valuation.

2019 - There were no changes in plan provisions since the previous valuation.

2018 - As set by statute, the assumed post-retirement benefit increase was changed from 1.0 percent per year through 2064 and 2.5 percent per year, thereafter, to 1.0 percent for all years, with no trigger. An end date of July 1, 2048 was added to the existing $9 million state contribution. New annual state aid will equal $4.5 million in fiscal years 2019 and 2020, and $9 million thereafter until the plan reaches 100 percent funding, or July 1, 2048, if earlier. Member contributions were changed from 10.8 percent to 11.3 percent of pay, effective January 1, 2019 and 11.8 percent of pay, effective January 1, 2020. Employer contributions were changed from 16.2 percent to 16.95 percent of pay, effective January 1, 2019 and 17.7 percent of pay, effective January 1, 2020. Interest credited on member contributions decreased from 4.0 percent to 3.0 percent, beginning July 1, 2018. Deferred augmentation was changed to 0.0 percent, effective January 1, 2019. Augmentation that has already accrued for deferred members will still apply. Actuarial equivalent factors were updated to reflect revised mortality and interest assumptions.

2017- Assumed salary increases were changed as recommended in the June 30, 2016 experience study. The net effect is proposed rates that average 0.34 percent lower than the previous rates. Assumed rates of retirement were changed, resulting in fewer retirements. The combined service annuity (CSA) load was 30.0 percent for vested and non-vested, deferred members. The CSA has been changed to 33.0 percent for vested members and 2.0 percent for non-vested members. The base mortality table for healthy annuitants was changed from the RP-2000 fully generational table to the RP-2014 fully generational table (with a base year of 2006), with male rates adjusted by a factor of 0.96. The mortality improvement scale was changed from Scale AA to Scale MP-2016. The base mortality table for disabled annuitants was changed from the RP-2000 disabled mortality table to the mortality tables assumed for healthy retirees. Assumed termination rates were decreased to 3.0 percent for the first three years of service. Rates beyond the select period of three years were adjusted, resulting in more expected terminations overall. Assumed percentage of married female members was decreased from 65.0 percent to 60.0 percent. Assumed age difference was changed from separate assumptions for male members (wives assumed to be three years younger) and female members (husbands assumed to be four years older) to the assumption that males are two years older than females. The assumed percentage of female members electing joint and survivor annuities was increased. The assumed postretirement benefit increase rate was changed from 1.0 percent for all years to 1.0 percent per year through 2064 and 2.5 percent thereafter. The single discount rate was changed from 5.6 percent per annum to 7.5 percent per annum.

2016 - There were no changes in plan provisions since the previous valuation.

2015 - The post-retirement benefit increase to be paid after attainment of the 90 percent funding threshold was changed, from inflation up to 2.5 percent, to a fixed rate of 2.5 percent.

## Schedule of Changes in the Fire Relief Association's Net Pension Liability (Asset) and Related Ratios

| | 2024 (Fire Relief Report Date 2023) | 2023 (Fire Relief Report Date 2022) | 2022 (Fire Relief Report Date 2021) | 2021 (Fire Relief Report Date 2020) | 2020 (Fire Relief Report Date 2019) | 2019 (Fire Relief Report Date 2018) | 2018 (Fire Relief Report Date 2017) | 2017 (Fire Relief Report Date 2016) | 2016 (Fire Relief Report Date 2015) | 2015 (Fire Relief Report Date 2014) |
|---|---|---|---|---|---|---|---|---|---|---|
| **Total Pension Liability** | | | | | | | | | | |
| Service cost | $ 33,544 | $ 46,732 | $ 42,173 | $ 40,079 | $ 39,101 | $ 39,814 | $ 38,843 | $ 33,447 | $ 34,915 | $ 34,064 |
| Interest on pension liability (asset) | 58,345 | 59,986 | 55,451 | 52,280 | 51,518 | 49,243 | 46,413 | 49,669 | 42,682 | 42,383 |
| Changes of benefit terms | - | - | - | - | - | (9,771) | - | 56,154 | - | - |
| Differences between expected and actual experience | - | - | - | - | - | - | - | (61,194) | - | - |
| Plan changes | 176,128 | - | 66,689 | 39,763 | - | - | - | - | - | - |
| Gain (loss) | - | (63,489) | - | (4,777) | - | - | - | - | - | - |
| Changes of assumptions | - | (12,223) | - | - | - | - | - | 29,317 | - | - |
| Benefit payments | (101,333) | (153,734) | (26,272) | (122,300) | (34,375) | (43,654) | (30,353) | - | (22,443) | (121,923) |
| **Net Change in Total Pension Liability** | 166,684 | (122,728) | 138,041 | 5,045 | 56,244 | 35,632 | 54,903 | 107,393 | 55,154 | (45,476) |
| **Total Pension Liability - January 1** | 950,647 | 1,073,375 | 935,334 | 930,289 | 874,045 | 838,413 | 783,510 | 676,117 | 620,963 | 666,439 |
| **Total Pension Liability - December 31 (a)** | $ 1,117,331 | $ 950,647 | $ 1,073,375 | $ 935,334 | $ 930,289 | $ 874,045 | $ 838,413 | $ 783,510 | $ 676,117 | $ 620,963 |
| **Plan Fiduciary Net Position** | | | | | | | | | | |
| Employer contributions | $ 1,600 | $ 5,000 | $ 5,000 | $ 4,000 | $ 2,000 | $ 3,290 | $ 25,938 | $ 26,985 | $ 36,524 | $ 61,125 |
| Nonemployer contributions | 101,601 | 91,767 | 83,703 | 78,372 | 73,602 | 70,555 | 68,299 | 69,347 | 70,145 | 60,989 |
| Projected investment return | 81,974 | 88,941 | 78,453 | 69,389 | 59,043 | (20,085) | 115,141 | 19,860 | 50,516 | 33,721 |
| Gain (loss) | 104,868 | (284,866) | 112,409 | 87,820 | 130,184 | - | - | - | - | - |
| Benefit payments | (101,333) | (153,734) | (26,272) | (122,300) | (34,375) | (43,654) | (30,353) | - | (22,443) | (121,923) |
| Administrative expenses | (11,883) | (11,605) | (10,763) | (10,885) | (9,001) | (9,734) | (8,004) | (7,056) | (10,229) | (6,500) |
| Other | - | - | - | - | - | - | - | - | (78,983) | (1,473) |
| **Net Change in Plan Fiduciary Net Position** | 176,827 | (264,497) | 242,530 | 106,396 | 221,453 | 372 | 171,021 | 109,136 | 45,530 | 25,939 |
| **Plan Fiduciary Net Position - January 1** | 1,316,598 | 1,581,095 | 1,338,565 | 1,232,169 | 1,010,716 | 1,010,344 | 839,323 | 730,187 | 684,657 | 658,718 |
| **Plan Fiduciary Net Position - December 31 (b)** | $ 1,493,425 | $ 1,316,598 | $ 1,581,095 | $ 1,338,565 | $ 1,232,169 | $ 1,010,716 | $ 1,010,344 | $ 839,323 | $ 730,187 | $ 684,657 |
| **Fire Relief's Net Pension Liability (Asset) - December 31 (a-b)** | $ (376,094) | $ (365,951) | $ (507,720) | $ (403,231) | $ (301,880) | $ (136,671) | $ (171,931) | $ (55,813) | $ (54,070) | $ (63,694) |
| **Plan Fiduciary Net Position as a Percentage of the Total Pension Liability (b/a)** | 133.66% | 138.49% | 147.30% | 143.11% | 132.45% | 115.64% | 120.51% | 107.12% | 108.00% | 110.26% |
| **Covered Payroll** | N/A | N/A | N/A | N/A | N/A | N/A | N/A | N/A | N/A | N/A |
| **Fire Relief's Net Pension Liability (Asset) as a Percentage of Covered Payroll** | N/A | N/A | N/A | N/A | N/A | N/A | N/A | N/A | N/A | N/A |

## Notes to the Required Supplementary Information - Fire Relief Association

Changes in Actuarial Assumptions

2024 – None

2023 – The discount rate changed from 5.75% to 6.25%

Changes in Plan Provisions

2024 – The Benefit Level changed from $4,000 to $5,000

2023 – None

Note: Notes to the RSI is intended to show 10-year trend. Additional years will be reported as they become available. Previous year information is not available at the time of the audit.

**Schedule of Employer's Fire Relief Association's Contributions**

| Year Ending | Actuarial Determined Contribution (a) | Actual Contributions Paid (b) | Contribution Deficiency (Excess) (a-b) |
|---|---|---|---|
| 12/31/24 | $ 120,734 | $ 122,334 | $ (1,600) |
| 12/31/23 | 101,601 | 103,201 | (1,600) |
| 12/31/22 | 91,767 | 96,767 | (5,000) |
| 12/31/21 | 83,703 | 88,703 | (5,000) |
| 12/31/20 | 78,372 | 82,372 | (4,000) |
| 12/31/19 | 73,602 | 75,602 | (2,000) |
| 12/31/18 | 70,555 | 73,845 | (3,290) |
| 12/31/17 | 68,299 | 94,237 | (25,938) |
| 12/31/16 | 69,347 | 96,332 | (26,985) |
| 12/31/15 | 70,145 | 106,669 | (36,524) |
| 12/31/14 | 60,989 | 122,114 | (61,125) |

## Schedule of Changes in the City's OPEB Liability and Related Ratios

| | 2024 |
|---|---|
| Total OPEB Liability | |
| Service Cost | $ 16,415 |
| Interest Cost | 8,090 |
| Benefit Payments | (8,306) |
| Net Change in Total OPEB Liability | 16,199 |
| Total OPEB Liability - Beginning | 189,943 |
| Total OPEB Liability - Ending | $ 206,142 |
| Covered - Employee Payroll | $ 2,902,126 |
| City's total OPEB liability as a percentage of covered employee payroll | 7.10 % |

*Changes in assumptions:*

2023
- The health care trend rates and mortality tables were updated.
- The retirement, withdrawal, and salary increase rates for public safety employees were updated.
- The inflation rate was changed from 2.00% to 2.50%.
- The discount rate was changed from 2.00% to 4.00%.

*Changes in Plan Provisions:*

- None

*Changes in benefits:*

- None

# COMBINING AND INDIVIDUAL FUND FINANCIAL STATEMENTS AND SCHEDULES

CITY OF NORTH BRANCH
NORTH BRANCH, MINNESOTA

FOR THE YEAR ENDED
DECEMBER 31, 2024

City of North Branch, Minnesota
Nonmajor Special Revenue Funds
Combining Balance Sheet
December 31, 2024

| | 201 | 208 | 260 | 270 | 276 |
|---|---|---|---|---|---|
| | EDA | Fire Department Equipment Donation | Tax Abatement | Revolving Loan | Cable Franchise |
| Assets | | | | | |
| Cash and investments | $ - | $ 193,228 | $ - | $ 334,840 | $ 102,462 |
| Receivables | | | | | |
| Accrued interest | - | - | - | 5,996 | - |
| Accounts | 18,400 | - | - | - | 11,464 |
| Taxes - current | 11,552 | - | - | - | - |
| Taxes - delinquent | 11,488 | - | - | - | - |
| Assets held for resale | 465,127 | - | - | - | - |
| Total Assets | $ 506,567 | $ 193,228 | $ - | $ 340,836 | $ 113,926 |
| Liabilities | | | | | |
| Accounts payable | $ 1,717 | $ - | $ - | $ - | $ - |
| Accrued salaries and withholdings payable | 792 | - | - | - | - |
| Due to other funds | 277,149 | - | - | - | - |
| Total Liabilities | 279,658 | - | - | - | - |
| Deferred Inflows of Resources | | | | | |
| Unavailable revenue - other | - | - | - | - | 11,464 |
| Unavailable revenue - taxes | 11,488 | - | - | - | - |
| Total Deferred Inflows of Resources | 11,488 | - | - | - | 11,464 |
| Fund Balances | | | | | |
| Restricted for | | | | | |
| Economic development | - | - | - | 340,836 | |
| Fire capital | - | 193,228 | - | - | - |
| Committed for | | | | | |
| Economic development | 215,421 | - | - | - | - |
| Communications | - | - | - | - | 102,462 |
| Unassigned | - | - | - | - | - |
| Total Fund Balances | 215,421 | 193,228 | - | 340,836 | 102,462 |
| Total Liabilities, Deferred Inflows of Resources and Fund Balances | $ 506,567 | $ 193,228 | $ - | $ 340,836 | $ 113,926 |

| 281 | 289 | 290 | 291 | 292 | |
|---|---|---|---|---|---|
| Ecumen TIF District | Flashing by Design TIF | Housing Support | Willow Grove | Everlong TIF | Total |
| $ 30,748 | $ - | $ 54,682 | $ 11,811 | $ 72,670 | $ 800,441 |
| - | - | - | - | - | 5,996 |
| - | - | - | - | - | 29,864 |
| - | - | - | - | - | 11,552 |
| - | - | - | - | - | 11,488 |
| - | - | - | - | - | 465,127 |
| $ 30,748 | $ - | $ 54,682 | $ 11,811 | $ 72,670 | $ 1,324,468 |
| $ - | $ - | $ - | $ - | $ - | $ 1,717 |
| - | - | - | - | - | 792 |
| - | 134,571 | - | - | - | 411,720 |
| - | 134,571 | - | - | - | 414,229 |
| - | - | - | - | - | 11,464 |
| - | - | - | - | - | 11,488 |
| - | - | - | - | - | 22,952 |
| 30,748 | - | 54,682 | 11,811 | 72,670 | 510,747 |
| - | - | - | - | - | 193,228 |
| - | - | - | - | - | 215,421 |
| - | - | - | - | - | 102,462 |
| - | (134,571) | - | - | - | (134,571) |
| 30,748 | (134,571) | 54,682 | 11,811 | 72,670 | 887,287 |
| $ 30,748 | $ - | $ 54,682 | $ 11,811 | $ 72,670 | $ 1,324,468 |

City of North Branch, Minnesota
Nonmajor Special Revenue Funds
Combining Statement of Revenues, Expenditures
and Changes in Fund Balances
For the Year Ended December 31, 2024

| | 201 | 208 | 260 | 270 | 276 |
|---|---|---|---|---|---|
| | EDA | Fire Department Equipment Donation | Tax Abatement | Revolving Loan | Cable Franchise |
| Revenues | | | | | |
| Taxes | | | | | |
| Property | $ 566,767 | $ - | $ 21 | $ - | $ - |
| Tax increments | - | - | - | - | - |
| Intergovernmental | 1,185 | - | - | - | - |
| Charges for services | 3,600 | - | - | - | - |
| Investment earnings | 3,935 | 4,781 | 705 | 13,336 | 3,218 |
| Miscellaneous revenues | | | | | |
| Contributions | - | 77,037 | - | - | - |
| Other | - | - | - | - | 45,855 |
| Total Revenues | 575,487 | 81,818 | 726 | 13,336 | 49,073 |
| Expenditures | | | | | |
| Current | | | | | |
| Economic development | 152,961 | - | - | - | - |
| Public safety | - | 22,297 | - | - | - |
| Total Expenditures | 152,961 | 22,297 | - | - | - |
| Excess (Deficiency) of Revenues Over (Under) Expenditures | 422,526 | 59,521 | 726 | 13,336 | 49,073 |
| Other Financing Sources (Uses) | | | | | |
| Transfers in | 185,000 | - | - | - | - |
| Transfers out | (341,579) | (23,825) | (22,299) | - | (26,000) |
| Total Other Financing Sources (Uses) | (156,579) | (23,825) | (22,299) | - | (26,000) |
| Net Change in Fund Balances | 265,947 | 35,696 | (21,573) | 13,336 | 23,073 |
| Fund Balances, January 1 | (50,526) | 157,532 | 21,573 | 327,500 | 79,389 |
| Fund Balances, December 31 | $ 215,421 | $ 193,228 | $ - | $ 340,836 | $ 102,462 |

| 281 | 289 | 290 | 291 | 292 | |
|---|---|---|---|---|---|
| Ecumen TIF District | Flashing by Design TIF | Housing Support | Willow Grove | Everlong TIF | Total |
| $ - | $ - | $ - | $ - | $ - | $ 566,788 |
| 137,602 | 23,579 | - | 16,286 | 25,970 | 203,437 |
| - | - | - | - | - | 1,185 |
| - | - | - | - | - | 3,600 |
| 1,752 | 1,872 | 1,731 | 54 | 1,943 | 33,327 |
| - | - | - | - | - | 77,037 |
| - | - | - | - | - | 45,855 |
| 139,354 | 25,451 | 1,731 | 16,340 | 27,913 | 931,229 |
| 995 | 1,180 | - | 14,202 | 1,180 | 170,518 |
| - | - | - | - | - | 22,297 |
| 995 | 1,180 | - | 14,202 | 1,180 | 192,815 |
| 138,359 | 24,271 | 1,731 | 2,138 | 26,733 | 738,414 |
| - | - | - | - | - | 185,000 |
| (130,000) | (7,200) | - | - | - | (550,903) |
| (130,000) | (7,200) | - | - | - | (365,903) |
| 8,359 | 17,071 | 1,731 | 2,138 | 26,733 | 372,511 |
| 22,389 | (151,642) | 52,951 | 9,673 | 45,937 | 514,776 |
| $ 30,748 | $ (134,571) | $ 54,682 | $ 11,811 | $ 72,670 | $ 887,287 |

City of North Branch, Minnesota
Capital Projects Funds
Combining Balance Sheet
December 31, 2024

| | 400 Fixed Wireless Capital | 401 Revolving Capital | 403 Park Improvements | 432 Equipment Revolving | 455 Road Improvements |
|---|---|---|---|---|---|
| Assets | | | | | |
| Cash and investments | $ - | $ 878,513 | $ 105,212 | $ - | $ (125,939) |
| Receivables | | | | | |
| Accrued interest | - | 9,422 | - | - | - |
| Accounts | - | - | - | - | - |
| Taxes - current | - | - | - | - | - |
| Taxes - delinquent | | | | | |
| Special assessments - deferred | - | - | - | - | 38,153 |
| Assets held for resale | - | - | - | - | - |
| Total Assets | $ - | $ 887,935 | $ 105,212 | $ - | $ (87,786) |
| Liabilities | | | | | |
| Accounts payable | $ - | $ - | $ - | $ - | $ - |
| Unearned revenue | - | 406,159 | - | - | - |
| Total Liabilities | - | 406,159 | - | - | - |
| Deferred Inflows of Resources | | | | | |
| Unavailable revenue - taxes | - | - | - | - | - |
| Unavailable revenue - special assessments | - | - | - | - | 38,153 |
| Total Deferred Inflows of Resources | - | - | - | - | 38,153 |
| Fund Balances | | | | | |
| Restricted for | | | | | |
| Capital projects | - | - | 66,000 | - | - |
| Debt service | - | - | - | - | - |
| Committed for | | | | | |
| Street maintenance | - | - | - | - | - |
| Assigned for | | | | | |
| Future capital improvements | - | 481,776 | 39,212 | - | - |
| Unassigned | - | - | - | - | (125,939) |
| Total Fund Balances | - | 481,776 | 105,212 | - | (125,939) |
| Total Liabilities, Deferred Inflows of Resources and Fund Balances | $ - | $ 887,935 | $ 105,212 | $ - | $ (87,786) |

| 458 Road Maintenance Franchise Fee | 475 Library/ Community Center | 476 Industrial Park IV | 478 Palletman | 486 Recreation Center | 492 Housing Project | 503 399th Improvement Project | 701 Equipment Replacement | Total |
|---|---|---|---|---|---|---|---|---|
| $ 192,121 | $ 177,822 | $ 535,741 | $ - | $ 214,841 | $ - | $ - | $ 20,320 | $ 1,998,631 |
| - | - | - | | | | | | 9,422 |
| 89,454 | - | - | - | - | - | - | - | 89,454 |
| - | - | 1,808 | | - | - | - | - | 1,808 |
| | | 6,165 | | | | | | 6,165 |
| - | - | - | - | - | - | - | - | 38,153 |
| - | - | 7,791,181 | - | - | - | - | - | 7,791,181 |
| $ 281,575 | $ 177,822 | $ 8,334,895 | $ - | $ 214,841 | $ - | $ - | $ 20,320 | $ 9,934,814 |
| $ 4,058 | $ - | $ - | $ - | $ 727 | $ - | $ - | $ 20,320 | $ 25,105 |
| - | - | - | - | - | - | - | - | 406,159 |
| 4,058 | - | - | - | 727 | - | - | 20,320 | 431,264 |
| - | - | 6,165 | - | - | - | - | - | 6,165 |
| - | - | - | - | - | - | - | - | 38,153 |
| - | - | 6,165 | - | - | - | - | - | 44,318 |
| - | - | - | - | - | - | - | - | 66,000 |
| - | - | 2,040,000 | - | - | - | - | - | 2,040,000 |
| 175,000 | - | - | - | - | - | - | - | 175,000 |
| 102,517 | 177,822 | 6,288,730 | - | 214,114 | - | - | | 7,304,171 |
| - | - | - | - | - | - | - | - | (125,939) |
| 277,517 | 177,822 | 8,328,730 | - | 214,114 | - | - | - | 9,459,232 |
| $ 281,575 | $ 177,822 | $ 8,334,895 | $ - | $ 214,841 | $ - | $ - | $ 20,320 | $ 9,934,814 |

City of North Branch, Minnesota
Capital Projects Funds
Combining Statement of Revenues, Expenditures and
Changes in Fund Balances
For the Year Ended December 31, 2024

| | 400 Fixed Wireless Capital | 401 Revolving Capital | 403 Park Improvements | 432 Equipment Revolving | 455 Road Improvements |
|---|---|---|---|---|---|
| Revenues | | | | | |
| Taxes | | | | | |
| General property | $ - | $ - | $ - | $ - | $ - |
| Franchise | - | - | - | - | - |
| Intergovernmental | - | 1,078,258 | 6,000 | - | - |
| Charges for services | - | - | - | - | - |
| Special assessments | - | - | - | - | 8,220 |
| Investment earnings | - | 20,663 | 3,210 | - | - |
| Miscellaneous | | | | | |
| Refunds and reimbursements | - | - | - | - | - |
| Other | - | 191,972 | 72,310 | - | - |
| Total Revenues | - | 1,290,893 | 81,520 | - | 8,220 |
| Expenditures | | | | | |
| Current | | | | | |
| General government | - | - | - | - | - |
| Culture and recreation | - | - | 3,650 | - | - |
| Capital outlay | | | | | |
| Public works | - | 778,138 | - | - | - |
| Culture and recreation | - | - | 12,735 | - | - |
| Debt service | | | | | |
| Principal | - | - | - | - | - |
| Interest and other charges | - | - | - | - | - |
| Total Expenditures | - | 778,138 | 16,385 | - | - |
| Excess (Deficiency) of Revenues Over (Under) Expenditures | - | 512,755 | 65,135 | - | 8,220 |
| Other Financing Sources (Uses) | | | | | |
| Transfers in | 17,032 | - | - | - | - |
| Transfers out | - | - | - | (2,069) | - |
| Total Other Financing Sources (Uses) | 17,032 | - | - | (2,069) | - |
| Net Changes in Fund Balances | 17,032 | 512,755 | 65,135 | (2,069) | 8,220 |
| Fund Balances, January 1 | (17,032) | (30,979) | 40,077 | 2,069 | (134,159) |
| Fund Balances, December 31 | $ - | $ 481,776 | $ 105,212 | $ - | $ (125,939) |

| 458 Road Maintenance Franchise Fee | 475 Library/ Community Center | 476 Industrial Park IV | 478 Palletman | 486 Recreation Center | 492 Housing Project | 503 399th Improvement Project | 701 Equipment Replacement | Interfund Elimination | Total |
|---|---|---|---|---|---|---|---|---|---|
| $ - | $ - | $ 223,735 | $ - | $ - | $ - | $ - | $ - | $ - | $ 223,735 |
| 355,086 | - | - | - | - | - | - | - | - | 355,086 |
| - | - | - | - | 3,235 | - | - | - | - | 1,087,493 |
| - | - | - | - | 124,606 | - | - | - | - | 124,606 |
| - | - | - | - | - | - | - | - | - | 8,220 |
| 3,707 | 5,628 | 6,155 | - | 9,476 | 272 | 10,875 | 7,449 | - | 67,435 |
| - | - | 6,792 | - | - | - | - | - | - | 6,792 |
| - | - | - | - | - | - | - | - | - | 264,282 |
| 358,793 | 5,628 | 236,682 | - | 137,317 | 272 | 10,875 | 7,449 | - | 2,137,649 |
| - | - | 29,136 | - | - | - | - | - | - | 29,136 |
| - | - | - | - | 58,404 | - | - | - | - | 62,054 |
| 103,284 | - | - | - | - | - | - | 617,094 | - | 1,498,516 |
| - | - | - | - | 300,512 | - | - | - | - | 313,247 |
| - | - | 225,000 | - | - | - | - | - | - | 225,000 |
| - | - | - | - | - | - | - | 301 | - | 301 |
| 103,284 | - | 254,136 | - | 358,916 | - | - | 617,395 | - | 2,128,254 |
| 255,509 | 5,628 | (17,454) | - | (221,599) | 272 | 10,875 | (609,946) | - | 9,395 |
| - | - | 343,589 | 8,007 | - | - | - | 498,900 | (343,589) | 523,939 |
| - | - | - | - | - | (8,585) | (343,589) | - | 343,589 | (10,654) |
| - | - | 343,589 | 8,007 | - | (8,585) | (343,589) | 498,900 | - | 513,285 |
| 255,509 | 5,628 | 326,135 | 8,007 | (221,599) | (8,313) | (332,714) | (111,046) | - | 522,680 |
| 22,008 | 172,194 | 8,002,595 | (8,007) | 435,713 | 8,313 | 332,714 | 111,046 | - | 8,936,552 |
| $ 277,517 | $ 177,822 | $ 8,328,730 | $ - | $ 214,114 | $ - | $ - | $ - | $ - | $ 9,459,232 |

City of North Branch, Minnesota
Debt Service Funds
Combining Balance Sheet
December 31, 2024

| | 315<br>2010B<br>G.O. Refunding<br>Bonds | 316<br>2013<br>G.O. Refunding<br>Bonds | 322<br>Street<br>Reconstruction<br>Bonds of 2009A<br>Refunded by 2020A | 323<br>2017C<br>Tax Increment<br>Refunding<br>Bonds | 387<br>2009<br>EDA Lease<br>Revenue Bonds |
|---|---|---|---|---|---|
| Assets | | | | | |
| Cash and investments | $ - | $ 590,974 | $ 30,656 | $ 273,487 | $ 534,326 |
| Receivables | | | | | |
| Accrued interest | - | 7,703 | - | - | - |
| Taxes - current | - | - | 385 | - | - |
| Taxes - delinquent | - | - | 1,315 | - | 3,156 |
| Special assessments - delinquent | - | - | - | - | - |
| Special assessments - deferred | - | - | - | - | - |
| Total Assets | $ - | $ 598,677 | $ 32,356 | $ 273,487 | $ 537,482 |
| Deferred Inflows of Resources | | | | | |
| Unavailable revenue - taxes | $ - | $ - | $ 1,315 | $ - | $ 3,156 |
| Unavailable revenue - special assessments | - | - | - | - | - |
| Total Deferred Inflows of Resources | - | - | 1,315 | - | 3,156 |
| Fund Balances | | | | | |
| Restricted for debt service | - | 598,677 | 31,041 | 273,487 | 534,326 |
| Total Deferred Inflows of Resources and Fund Balances | $ - | $ 598,677 | $ 32,356 | $ 273,487 | $ 537,482 |

| 393<br>2017B<br>Tax Increment<br>Refunding<br>Bonds | 394<br>2006C<br>G.O. Bonds | 397<br>2007A<br>G.O. Bonds | 398<br>2008A G.O.<br>Bonds Refunded<br>By 2020A | 399<br>2022A<br>Certificates of<br>Indebtedness | Total |
|---|---|---|---|---|---|
| $ 444,797 | $ - | $ - | $ 570,622 | $ 138,329 | $ 2,583,191 |
| - | - | - | - | - | 7,703 |
| 335 | - | - | - | 1,165 | 1,885 |
| - | - | - | - | 3,973 | 8,444 |
| - | - | - | 15,912 | - | 15,912 |
| - | - | - | 372,648 | - | 372,648 |
| $ 445,132 | $ - | $ - | $ 959,182 | $ 143,467 | $ 2,989,783 |
| $ - | $ - | $ - | $ - | $ 3,973 | $ 8,444 |
| - | - | - | 388,560 | - | 388,560 |
| - | - | - | 388,560 | 3,973 | 397,004 |
| 445,132 | - | - | 570,622 | 139,494 | 2,592,779 |
| $ 445,132 | $ - | $ - | $ 959,182 | $ 143,467 | $ 2,989,783 |

City of North Branch, Minnesota
Debt Service Funds
Combining Schedule of Revenues, Expenditures and
Changes in Fund Balances
For the Year Ended December 31, 2024

| | 315<br>2010B<br>G.O. Refunding<br>Bonds | 316<br>2013<br>G.O. Refunding<br>Bonds | 322<br>Street<br>Reconstruction<br>Bonds of 2009A<br>Refunded by 2020A | 323<br>2017C<br>Tax Increment<br>Refunding<br>Bonds | 387<br>2009<br>EDA Lease<br>Revenue Bonds |
|---|---|---|---|---|---|
| Revenues | | | | | |
| Taxes | | | | | |
| Property | $ - | $ - | $ 46,777 | $ - | $ 2,510 |
| Tax increment | - | - | - | 176,500 | - |
| Intergovernmental | - | 115,550 | - | - | - |
| Special assessments | - | 68,649 | - | - | - |
| Investment earnings | - | 14,099 | 277 | 2,259 | 9,143 |
| Total Revenues | - | 198,298 | 47,054 | 178,759 | 11,653 |
| Expenditures | | | | | |
| Debt service | | | | | |
| Principal | - | 130,000 | 38,000 | 150,000 | 260,000 |
| Interest and other charges | - | 3,785 | 7,954 | 92,943 | 81,579 |
| Total Expenditures | - | 133,785 | 45,954 | 242,943 | 341,579 |
| Excess (Deficiency) of Revenues Over (Under) Expenditures | - | 64,513 | 1,100 | (64,184) | (329,926) |
| Other Financing Sources (Uses) | | | | | |
| Transfers in | 4,270 | - | - | 130,000 | 341,579 |
| Transfers out | - | - | - | (15,000) | - |
| Total Other Financing Sources (Uses) | 4,270 | - | - | 115,000 | 341,579 |
| Net Change in Fund Balances | 4,270 | 64,513 | 1,100 | 50,816 | 11,653 |
| Fund Balances, January 1 | (4,270) | 534,164 | 29,941 | 222,671 | 522,673 |
| Fund Balances, December 31 | $ - | $ 598,677 | $ 31,041 | $ 273,487 | $ 534,326 |

| 393<br>2017B<br>Tax Increment<br>Refunding<br>Bonds | 394<br>2006C<br>G.O. Bonds | 397<br>2007A<br>G.O. Bonds | 398<br>2008A G.O.<br>Bonds Refunded<br>By 2020A | 399<br>2022A<br>Certificates of<br>Indebtedness | Interfund<br>Elimination | Total |
|---|---|---|---|---|---|---|
| $ - | $ - | $ - | $ - | $ 141,424 | $ - | $ 190,711 |
| 183,116 | - | - | - | - | - | 359,616 |
| - | - | - | - | - | - | 115,550 |
| - | - | - | 89,252 | - | - | 157,901 |
| 11,576 | 694 | - | 16,420 | 1,492 | - | 55,960 |
| 194,692 | 694 | - | 105,672 | 142,916 | - | 879,738 |
| 165,000 | - | - | 106,000 | 120,000 | - | 969,000 |
| 14,505 | - | - | 11,258 | 18,600 | - | 230,624 |
| 179,505 | - | - | 117,258 | 138,600 | - | 1,199,624 |
| 15,187 | 694 | - | (11,586) | 4,316 | - | (319,886) |
| 15,000 | - | 77,450 | - | - | (92,450) | 475,849 |
| (55,523) | (21,927) | - | - | - | 92,450 | - |
| (40,523) | (21,927) | 77,450 | - | - | - | 475,849 |
| (25,336) | (21,233) | 77,450 | (11,586) | 4,316 | - | 155,963 |
| 470,468 | 21,233 | (77,450) | 582,208 | 135,178 | - | 2,436,816 |
| $ 445,132 | $ - | $ - | $ 570,622 | $ 139,494 | $ - | $ 2,592,779 |

City of North Branch, Minnesota
General Fund
Schedule of Revenues, Expenditures and Changes in Fund Balances
Budget and Actual (Continued)
For the Year Ended December 31, 2024
(With Comparative Actual Amounts for the Year Ended December 31, 2023)

| | 2024 | | | | 2023 |
|---|---|---|---|---|---|
| | Budgeted Amounts | | Actual | Variance with | Actual |
| | Original | Final | Amounts | Final Budget | Amounts |
| Revenues | | | | | |
| Taxes | | | | | |
| General property | $ 5,482,000 | $ 5,482,000 | $ 5,399,996 | $ (82,004) | $ 4,557,456 |
| Other taxes | 24,000 | 24,000 | 26,454 | 2,454 | 20,923 |
| Total taxes | 5,506,000 | 5,506,000 | 5,426,450 | (79,550) | 4,578,379 |
| Licenses and permits | | | | | |
| Business | 24,500 | 24,500 | 25,108 | 608 | 23,977 |
| Non-business | 312,000 | 312,000 | 412,575 | 100,575 | 384,821 |
| Total licenses and permits | 336,500 | 336,500 | 437,683 | 101,183 | 408,798 |
| Intergovernmental | | | | | |
| Federal | | | | | |
| Other federal grants | - | - | 24,000 | 24,000 | - |
| State | | | | | |
| Local government aid | 1,029,202 | 1,029,202 | 1,029,202 | - | 855,681 |
| Property tax credits | 9,000 | 9,000 | 11,275 | 2,275 | 10,281 |
| Street maintenance | 206,000 | 206,000 | 245,270 | 39,270 | 222,240 |
| Fire aid | 85,000 | 85,000 | 122,334 | 37,334 | 102,601 |
| Police aid | 110,000 | 110,000 | 168,158 | 58,158 | 627,051 |
| Other state aid | 10,000 | 10,000 | 91,064 | 81,064 | 82,687 |
| Total intergovernmental | 1,449,202 | 1,449,202 | 1,691,303 | 242,101 | 1,900,541 |
| Charges for services | | | | | |
| General government | 43,700 | 43,700 | 68,239 | 24,539 | 31,031 |
| Public safety | 105,000 | 105,000 | 112,302 | 7,302 | 92,412 |
| Total charges for services | 148,700 | 148,700 | 180,541 | 31,841 | 123,443 |
| Fines and forfeitures | 17,000 | 17,000 | 24,796 | 7,796 | 17,669 |
| Special assessments | 2,000 | 2,000 | 7,834 | 5,834 | 2,270 |
| Investment earnings | 15,000 | 15,000 | 131,527 | 116,527 | 199,701 |
| Miscellaneous revenues | | | | | |
| Contributions and donations | - | - | 1,821 | 1,821 | 7,998 |
| Refunds and reimbursements | 97,500 | 97,500 | 81,529 | (15,971) | 137,975 |
| Other | - | - | 12,234 | 12,234 | 699 |
| Total miscellaneous | 97,500 | 97,500 | 95,584 | (1,916) | 146,672 |
| Total Revenues | 7,571,902 | 7,571,902 | 7,995,718 | 423,816 | 7,377,473 |

City of North Branch, Minnesota
General Fund
Schedule of Revenues, Expenditures and Changes in Fund Balances
Budget and Actual (Continued)
For the Year Ended December 31, 2024
(With Comparative Actual Amounts for the Year Ended December 31, 2023)

| | 2024 | | | | 2023 |
|---|---|---|---|---|---|
| | Budgeted Amounts | | Actual | Variance with | Actual |
| | Original | Final | Amounts | Final Budget | Amounts |
| Expenditures | | | | | |
| Current | | | | | |
| General government | | | | | |
| Mayor and council | | | | | |
| Personnel services | $ 23,319 | $ 23,319 | $ 23,270 | $ 49 | $ 23,276 |
| Supplies | 1,500 | 1,500 | 432 | 1,068 | 1,374 |
| Other services and charges | 9,900 | 9,900 | 17,388 | (7,488) | 3,822 |
| Total mayor and council | 34,719 | 34,719 | 41,090 | (6,371) | 28,472 |
| Administration | | | | | |
| Personnel services | 180,823 | 180,823 | 76,360 | 104,463 | 269,546 |
| Supplies | 250 | 250 | - | 250 | 221 |
| Other services and charges | 8,100 | 8,100 | 24,502 | (16,402) | 5,614 |
| Total administration | 189,173 | 189,173 | 100,862 | 88,311 | 275,381 |
| Elections | | | | | |
| Personnel services | 15,000 | 15,000 | 13,156 | 1,844 | (670) |
| Supplies | 2,500 | 2,500 | 1,627 | 873 | 481 |
| Other services and charges | 500 | 500 | 697 | (197) | 189 |
| Total elections | 18,000 | 18,000 | 15,480 | 2,520 | - |
| General government buildings | | | | | |
| Personnel services | 70,445 | 70,445 | 74,385 | (3,940) | 66,577 |
| Supplies | 61,100 | 61,100 | 64,562 | (3,462) | 70,069 |
| Other services and charges | 127,800 | 127,800 | 69,825 | 57,975 | 116,048 |
| Total general government buildings | 259,345 | 259,345 | 208,772 | 50,573 | 252,694 |
| Finance | | | | | |
| Personnel services | 404,092 | 404,092 | 451,969 | (47,877) | 384,664 |
| Other services and charges | 79,400 | 79,400 | 46,404 | 32,996 | 172,261 |
| Total finance | 483,492 | 483,492 | 498,373 | (14,881) | 556,925 |
| Legal | | | | | |
| Other services and charges | 55,300 | 55,300 | 157,238 | (101,938) | 119,782 |
| Planning and zoning | | | | | |
| Personnel services | 86,490 | 86,490 | 60,445 | 26,045 | 167,066 |
| Supplies | 200 | 200 | - | 200 | - |
| Other services and charges | 98,495 | 98,495 | 133,765 | (35,270) | 17,706 |
| Total planning and zoning | 185,185 | 185,185 | 194,210 | (9,025) | 184,772 |

City of North Branch, Minnesota
General Fund
Schedule of Revenues, Expenditures and Changes in Fund Balances
Budget and Actual (Continued)
For the Year Ended December 31, 2024
(With Comparative Actual Amounts for the Year Ended December 31, 2023)

| | 2024 | | | | 2023 |
|---|---|---|---|---|---|
| | Budgeted Amounts | | Actual | Variance with | Actual |
| | Original | Final | Amounts | Final Budget | Amounts |
| Expenditures (Continued) | | | | | |
| Current (continued) | | | | | |
| General government (continued) | | | | | |
| Miscellaneous | | | | | |
| Personnel services | $ - | $ - | $ 1,042 | (1,042) | $ 27,681 |
| Other services and charges | 157,200 | 157,200 | 154,969 | 2,231 | 112,186 |
| Total miscellaneous | 157,200 | 157,200 | 156,011 | 1,189 | 139,867 |
| Total general government | 1,382,414 | 1,382,414 | 1,372,036 | 10,378 | 1,557,893 |
| Public safety | | | | | |
| Police protection | | | | | |
| Personnel services | 2,295,428 | 2,295,428 | 2,314,701 | (19,273) | 2,308,078 |
| Supplies | 100,458 | 100,458 | 149,510 | (49,052) | 105,482 |
| Other services and charges | 261,425 | 261,425 | 249,208 | 12,217 | 229,204 |
| Total police protection | 2,657,311 | 2,657,311 | 2,713,419 | (56,108) | 2,642,764 |
| Fire protection | | | | | |
| Personnel services | 91,148 | 91,148 | 94,733 | (3,585) | 92,081 |
| Supplies | 114,500 | 114,500 | 121,499 | (6,999) | 66,414 |
| Other services and charges | 251,825 | 251,825 | 253,068 | (1,243) | 249,253 |
| Total fire protection | 457,473 | 457,473 | 469,300 | (11,827) | 407,748 |
| Building inspection | | | | | |
| Personnel services | 358,561 | 358,561 | 342,178 | 16,383 | 326,551 |
| Supplies | 4,000 | 4,000 | 1,603 | 2,397 | 2,758 |
| Other services and charges | 9,450 | 9,450 | 3,982 | 5,468 | 7,153 |
| Total building inspection | 372,011 | 372,011 | 347,763 | 24,248 | 336,462 |
| Other protection | | | | | |
| Supplies | 33,000 | 33,000 | 65,533 | (32,533) | 69,075 |
| Other services and charges | 8,525 | 8,525 | 13,463 | (4,938) | 11,046 |
| Total other protection | 41,525 | 41,525 | 78,996 | (37,471) | 80,121 |
| Total public safety | 3,528,320 | 3,528,320 | 3,609,478 | (81,158) | 3,467,095 |
| Public works | | | | | |
| Highways and streets | | | | | |
| Personnel services | 698,303 | 698,303 | 717,246 | (18,943) | 643,886 |
| Supplies | 380,300 | 380,300 | 378,194 | 2,106 | 419,848 |
| Other services and charges | 768,100 | 768,100 | 733,243 | 34,857 | 352,424 |
| Total highways and streets | 1,846,703 | 1,846,703 | 1,828,683 | 18,020 | 1,416,158 |
| Culture and recreation | | | | | |
| Parks | | | | | |
| Personnel services | 219,537 | 219,537 | 208,893 | 10,644 | 189,158 |
| Supplies | 23,110 | 23,110 | 33,228 | (10,118) | 23,144 |
| Other services and charges | 195,700 | 195,700 | 73,808 | 121,892 | 93,252 |
| Total parks | 438,347 | 438,347 | 315,929 | 122,418 | 305,554 |

City of North Branch, Minnesota
General Fund
Schedule of Revenues, Expenditures and Changes in Fund Balances
Budget and Actual (Continued)
For the Year Ended December 31, 2024
(With Comparative Actual Amounts for the Year Ended December 31, 2023)

| | 2024 | | | | 2023 |
|---|---|---|---|---|---|
| | Budgeted Amounts | | Actual | Variance with | Actual |
| | Original | Final | Amounts | Final Budget | Amounts |
| Expenditures (Continued) | | | | | |
| Current (continued) | | | | | |
| Culture and recreation (continued) | | | | | |
| Library | | | | | |
| Personnel services | $ 39,892 | $ 39,892 | $ 42,481 | $ (2,589) | $ 40,936 |
| Other services and charges | 55,300 | 55,300 | 39,093 | 16,207 | 44,312 |
| Total library | 95,192 | 95,192 | 81,574 | 13,618 | 85,248 |
| Total culture and recreation | 533,539 | 533,539 | 397,503 | 136,036 | 390,802 |
| Debt Service | | | | | |
| Principal | 49,241 | 49,241 | 49,241 | - | 47,275 |
| Interest and other charges | 16,258 | 16,258 | 16,258 | - | 18,225 |
| Total debt service | 65,499 | 65,499 | 65,499 | - | 65,500 |
| Total current | 7,356,475 | 7,356,475 | 7,273,199 | 83,276 | 6,897,448 |
| Capital outlay | | | | | |
| General government | - | - | - | - | 460,283 |
| Public safety | 60,500 | 60,500 | 214,869 | (154,369) | 306,947 |
| Public works | 86,000 | 86,000 | 40,064 | 45,936 | 335,948 |
| Total capital outlay | 146,500 | 146,500 | 254,933 | (108,433) | 1,103,178 |
| Total Expenditures | 7,502,975 | 7,502,975 | 7,528,132 | (25,157) | 8,000,626 |
| Excess (Deficiency) of Revenues Over(Under) Expenditures | 68,927 | 68,927 | 467,586 | 398,659 | (623,153) |
| Other Financing Sources (Uses) | | | | | |
| Sale of capital assets | - | - | - | - | 204,245 |
| Transfers in | 121,800 | 121,800 | 209,241 | 87,441 | 424,154 |
| Transfers out | (185,000) | (560,000) | (713,209) | (153,209) | (50,000) |
| Total Other Financing Sources (Uses) | (63,200) | (438,200) | (503,968) | (65,768) | 578,399 |
| Net Change in Fund Balances | 5,727 | (369,273) | (36,382) | 332,891 | (44,754) |
| Fund Balances, January 1 | 5,369,812 | 5,369,812 | 5,369,812 | - | 5,414,566 |
| Fund Balances, December 31 | $ 5,375,539 | $ 5,000,539 | $ 5,333,430 | $ 332,891 | $ 5,369,812 |

# City of North Branch, Minnesota

Summary Financial Report
Revenues and Expenditures For General Operations
Governmental Funds
For the Years Ended December 31, 2024 and 2023

| | Total 2024 | Total 2023 | Percent Increase (Decrease) |
|---|---|---|---|
| Revenues | | | |
| Taxes | $ 7,325,823 | $ 6,611,593 | 10.80 % |
| Licenses and permits | 437,683 | 408,798 | 7.07 |
| Intergovernmental | 2,895,531 | 2,597,327 | 11.48 |
| Charges for services | 308,747 | 82,894 | 272.46 |
| Fines and forfeits | 24,796 | 17,669 | 40.34 |
| Special assessments | 173,955 | 526,342 | (66.95) |
| Investment earnings (loss) | 288,249 | 386,712 | (25.46) |
| Miscellaneous | 489,550 | 343,067 | 42.70 |
| Total Revenues | $ 11,944,334 | $ 10,974,402 | 8.84 % |
| Per capita | $ 1,007 | $ 934 | 7.90 % |
| Expenditures | | | |
| Current | | | |
| General government | $ 1,401,172 | $ 1,583,590 | (11.52) % |
| Public safety | 3,631,775 | 3,489,371 | 4.08 |
| Public works | 1,828,683 | 1,416,158 | 29.13 |
| Culture and recreation | 459,557 | 390,802 | 17.59 |
| Community development | 170,518 | 196,863 | (13.38) |
| Capital outlay | 2,066,696 | 2,591,220 | (20.24) |
| Debt service | | | |
| Principal | 1,243,241 | 1,250,275 | (0.56) |
| Interest and other charges | 247,183 | 290,929 | (15.04) |
| Total Expenditures | $ 11,048,825 | $ 11,209,208 | (1.43) % |
| Per capita | $ 932 | $ 953 | (2.28) % |
| Total Long-term indebtedness | $ 3,186,056 | $ 3,616,753 | (11.91) % |
| Per capita | 269 | 308 | (12.67) |
| General Fund Balance - December 31 | $ 5,333,430 | $ 5,369,812 | (0.68) % |
| Per capita | 450 | 457 | (1.53) |

The purpose of this report is to provide a summary of financial information concerning the City of North Branch to citizens. The financial statements may be examined at City Hall, 6408 Elm Street, Minnesota 55056. Questions about his report should be directed to Sharon Wright, Finance Director, at (651)-277-5230.

OTHER REQUIRED REPORTS

CITY OF NORTH BRANCH
NORTH BRANCH, MINNESOTA

FOR THE YEAR ENDED
DECEMBER 31, 2024

THIS PAGE IS LEFT

BLANK INTENTIONALLY

**INDEPENDENT AUDITOR'S REPORT**
**ON MINNESOTA LEGAL COMPLIANCE**

Honorable Mayor and City Council
City of North Branch, Minnesota

We have audited, in accordance with auditing standards generally accepted in the United States of America and the standards applicable to financial audits contained in *Government Auditing Standards* issued by the Comptroller General of the United States, the financial statements of governmental activities, the business-type activities, each major fund and the aggregate remaining fund information of City of North Branch as of and for the year ended December 31, 2024, and the related notes to the financial statements, which collectively comprise the City's basic financial statements, and have issued our report thereon dated June 4, 2025.

In connection with our audit, nothing came to our attention that caused us to believe that the City of North Branch failed to comply with the provisions of the contracting and bidding, deposits and investments, conflicts of interest, public indebtedness, claims and disbursements, miscellaneous provisions, and tax increment financing sections of the *Minnesota Legal Compliance Audit Guide for Cities*, promulgated by the State Auditor pursuant to Minn. Stat. § 6.65, except as described in the Schedule of Findings and Responses as item 2024-005. However, our audit was not directed primarily toward obtaining knowledge of such noncompliance. Accordingly, had we performed additional procedures, other matters may have come to our attention regarding the City's noncompliance with the above referenced provisions, insofar as they relate to accounting matters.

*Government Auditing Standards* requires the auditor to perform limited procedures on the City's responses to the findings identified in our audit and described in the accompanying schedule of findings and responses. The City's responses was not subjected to the other auditing procedures applied in the audit of the financial statements and, accordingly, we express no opinion on the responses.

The purpose of this report is solely to describe the scope of our testing of compliance and the results of that testing, and not to provide an opinion on compliance. Accordingly, this communication is not suitable for any other purpose.

**Abdo**
Minneapolis, Minnesota
June 4, 2025

**INDEPENDENT AUDITOR'S REPORT ON INTERNAL CONTROL OVER FINANCIAL REPORTING AND ON COMPLIANCE AND OTHER MATTERS BASED ON AN AUDIT OF FINANCIAL STATEMENTS PERFORMED IN ACCORDANCE WITH *GOVERNMENT AUDITING STANDARDS***

Honorable Mayor and City Council
City of North Branch, Minnesota

We have audited, in accordance with the auditing standards generally accepted in the United States of America and the standards applicable to financial audits contained in *Government Auditing Standards* issued by the Comptroller General of the United States, the financial statements of the governmental activities, the business-type activities, each major fund and the aggregate remaining fund information of the City of North Branch, Minnesota (the City), as of and for the year ended December 31, 2024 and the related notes to the financial statements, which collectively comprise the City's basic financial statements, and have issued our report thereon dated June 4, 2025.

**Report on Internal Control Over Financial Reporting**

In planning and performing our audit of the financial statements, we considered the City's internal control over financial reporting (internal control) as a basis for designing audit procedures that are appropriate in the circumstances for the purpose of expressing our opinions on the financial statements, but not for the purpose of expressing an opinion on the effectiveness of the City's internal control. Accordingly, we do not express an opinion on the effectiveness of the City's internal control.

A *deficiency in internal control* exists when the design or operation of a control does not allow management or employees, in the normal course of performing their assigned functions, to prevent, or detect and correct, misstatements on a timely basis. A *material weakness* is a deficiency, or a combination of deficiencies, in internal control, such that there is a reasonable possibility that a material misstatement of the entity's financial statements will not be prevented, or detected and corrected on a timely basis. A *significant deficiency* is a deficiency, or a combination of deficiencies, in internal control that is less severe than a material weakness, yet important enough to merit attention by those charged with governance.

Our consideration of internal control was for the limited purpose described in the first paragraph of this section and was not designed to identify all deficiencies in internal control that might be material weaknesses or significant deficiencies. Given these limitations, during our audit we identified deficiencies in internal control that we consider to be a material weakness as item 2024-004 and items 2024-001, 2024-002, and 2024-003 that we consider to be significant deficiencies.

**Report on Compliance and Other Matters**

As part of obtaining reasonable assurance about whether the City's financial statements are free from material misstatement, we performed tests of its compliance with certain provisions of laws, regulations, contracts, and grant agreements, noncompliance with which could have a direct and material effect on the financial statements. However, providing an opinion on compliance with those provisions was not an objective of our audit, and accordingly, we do not express such an opinion. The results of our tests disclosed no instances of noncompliance or other matters that are required to be reported under *Government Auditing Standards.*

**Response to Findings**

*Government Auditing Standards* requires the auditor to perform limited procedures on the City's responses to the findings identified in our audit and described in the accompanying schedule of findings, questioned costs and responses. The City's responses was not subjected to the other auditing procedures applied in the audit of the financial statements and, accordingly, we express no opinion on the responses.

**Purpose of this Report**

The purpose of this report is solely to describe the scope of our testing of internal control and compliance and the results of that testing, and not to provide an opinion on the effectiveness of the City's internal control or on compliance. This report is an integral part of an audit performed in accordance with *Government Auditing Standards* in considering the City's internal control and compliance. Accordingly, this communication is not suitable for any other purpose.

**Abdo**
Minneapolis, Minnesota
June 4, 2025

THIS PAGE IS LEFT

BLANK INTENTIONALLY

| Finding | Description |
|---|---|
| **2024-001** | **Financial Statement Preparation** |
| *Condition:* | We were requested to draft the audited financial statements and related footnote disclosures as part of our regular audit services. Auditing standards require auditors to communicate this situation to the Council as an internal control deficiency. Ultimately, it is management's responsibility to provide for the preparation of your statements and footnotes, and the responsibility of the auditor to determine the fairness of presentation of those statements. From a practical standpoint we do both for you at the same time in connection with our audit. This is not unusual for us to do with organizations of your size. However, based on recent auditing standards, it is our responsibility to inform you that this deficiency could result in a material misstatement to the financial statements that could have been prevented or detected by your management. Essentially, the auditors cannot be part of your internal control process. |
| *Criteria:* | Internal controls should be in place to provide reasonable assurance over financial reporting. |
| *Cause:* | From a practical standpoint we do both for you at the same time in connection with our audit. This is not unusual for us to do with organization of your size. |
| *Effect:* | The effectiveness of the internal control system relies on enforcement by management. The effect of deficiencies in internal controls can result in undetected errors in financial reporting. |
| *Recommendation:* | It is your responsibility to make the ultimate decision to accept this degree of risk associated with this condition because of cost or other considerations. As in prior years, we have instructed management to review a draft of the auditor prepared financials in detail for their accuracy; we have answered any questions they might have and have encouraged research of any accounting guidance in connection with the adequacy and appropriateness of classification of disclosure in your statements. We are satisfied that the appropriate steps have been taken to provide you with the completed financial statements. While the City is reviewing the financial statements, we recommend a disclosure checklist is utilized to ensure all required disclosures are presented and the City should agree its financial software to the numbers reported in the financial statements. |

*Management Response:*

For now, the City's management accepts the degree of risk associated with this condition and thoroughly reviews a draft of the financial statements.

| Finding | Description |
|---|---|
| **2024-002** | **Limited Segregation of Duties** |
| *Condition:* | During our audit we reviewed procedures over cash receipts, cash disbursements, payroll, utility billing, financial reporting and capital assets, and found the City to have limited segregation of duties over those transaction cycles. |
| *Criteria:* | There are four general categories of duties: authorization, custody, recording and reconciliation. In an ideal system, different employees perform each of these four major functions. In other words, no one person has control of two or more of these responsibilities. |
| *Cause:* | There are several employees involved in multiple of the general categories in the transactions cycles listed above. |
| *Effect:* | The existence of this limited segregation of duties increases the risk of fraud and error. |
| *Recommendation:* | We recommend that the City evaluate the current procedures and segregate duties where possible and implement any compensating controls. It is important that the City Council is aware of this condition and monitor all financial information. |

*Management Response:*

There is no disagreement with the audit finding. The City will continue to explore the possible further segregation of duties within the City office to minimize the potential risk until it is no longer cost effective for the City.

| | |
|---|---|
| **2024-003** | **I-9 Document Retention** |
| *Condition:* | During our audit, we noted the City was missing several employee I-9's |
| *Criteria:* | I-9's are required to be retained for three years after the date of hire, or one year after employment is terminates, whichever is later. |
| *Cause:* | Due to employee turnover, several I-9's were unable to be located. |
| *Effect:* | The City is out of compliance with retention requirements of employment eligibility verification. |
| *Recommendation:* | We recommend that the City review is policies in place regarding I-9 retention. |

*Management Response:*

There is no disagreement with the audit finding. The City will ensure documentation is kept on file going forward.

| Finding | Description |
|---|---|
| **2024-004** | **Cash Reconciliations** |
| *Condition:* | During our audit, we noted the City does not have a formal process in place to reconcile the cash held in banks to cash reported in the accounting system. |
| *Criteria:* | Proper policies should be in place to ensure accurate financial reporting. |
| *Cause:* | City staff has not reconciled their cash held in banks to their cash reported in the accounting system. |
| *Effect:* | Incomplete cash reconciliations could result in inaccurate financial statements and misappropriation of funds. |
| *Recommendation:* | We recommend that the City establishes a formal process for reconciling cash on a regular basis, including procedures for identifying and resolving discrepancies. |

*Management Response:*

There is no disagreement with the audit finding. The City will continue to explore policies and procedures for cash reconciliations.

| | |
|---|---|
| **2024-005** | **Support for Credit Card Transactions** |
| *Condition:* | During our audit, we noted the City was missing support for several credit card transactions. |
| *Criteria:* | Minnesota statute §15.17, subdivision 1, requires the City to preserve all records necessary for “a full and accurate knowledge of their official activities.” Under Minnesota statute §471.38 all claims presented for payment must be in writing and itemized. |
| *Cause:* | The current process of disbursements to credit card vendors involves payments to those vendors prior to having all invoices and receipts that support the charges. |
| *Effect:* | The City is out of compliance with Minnesota Statutes. |
| *Recommendation:* | We recommend that the City obtain all support of credit card transactions prior to payments of the related purchase. |

*Management Response:*

There is no disagreement with the audit finding. The City will ensure documentation is kept on file going forward.

**City of North Branch**
**Staff Report**

**Prepared By: Sharon Wright, Finance Director**

**Presenter:**

**Date: 05/30/2025**

**Board & Commission: City Council**

**Subject: Claims**

---

Claims Summary

**Voting Requirements:**

**Voting Options** **Simple Majority**

# City of
# North Branch

**ACH Checks**

5814 to 5837 - $189,750.25

*Delta Dental Ck 5821 for 6/5 Pending

**Checks**

91570 to 91634 - $331,912.00

**Payroll**

06/06/2025 - $125,548.38

# Accounts Payable

## Checks by Date - Summary by Check Date

User: TiffaniFolstad
Printed: 6/5/2025 4:04 PM

| Check No | Vendor No | Vendor Name | Check Date | Check Amount |
|---|---|---|---|---|
| 5816 | 1372 | Minnesota State Retirement | 05/27/2023 | 3,294.17 |
| | | | Total for 5/27/2023: | 3,294.17 |
| 5822 | 2170 | Pathpoint Merchant Services LLC | 05/02/2025 | 1,848.59 |
| | | | Total for 5/2/2025: | 1,848.59 |
| 5823 | 1044 | Bank Charges, Miscellaneous | 05/07/2025 | 1.53 |
| 5830 | 2096 | Xpress Solutions Inc | 05/07/2025 | 2,287.65 |
| | | | Total for 5/7/2025: | 2,289.18 |
| 5831 | 1424 | N.B. Fire Relief Association | 05/09/2025 | 690.75 |
| | | | Total for 5/9/2025: | 690.75 |
| 5833 | 1941 | WEX, Inc. | 05/13/2025 | 6,266.01 |
| 5835 | 1941 | WEX, Inc. | 05/13/2025 | 2,666.66 |
| 5836 | 1941 | WEX, Inc. | 05/13/2025 | 1,000.00 |
| | | | Total for 5/13/2025: | 9,932.67 |
| 5829 | 1033 | Associated Bank | 05/14/2025 | 89.20 |
| | | | Total for 5/14/2025: | 89.20 |
| 5827 | 1362 | Minnesota Dept of Revenue | 05/16/2025 | 31,710.00 |
| 5828 | 1362 | Minnesota Dept of Revenue | 05/16/2025 | 1,089.00 |
| | | | Total for 5/16/2025: | 32,799.00 |
| 5820 | 1899 | BlueCross/Blue Shield Minnesota | 05/18/2025 | 46,411.20 |
| | | | Total for 5/18/2025: | 46,411.20 |
| 5837 | 2146 | Bremer Bank | 05/22/2025 | 250.01 |
| | | | Total for 5/22/2025: | 250.01 |
| 5814 | 1585 | United States Treasury | 05/23/2025 | 37,571.44 |
| 5815 | 1431 | Nationwide Retirement Solution | 05/23/2025 | 5.00 |
| 5817 | 1468 | PERA (Payroll W/H) | 05/23/2025 | 35,500.43 |
| 5818 | 1118 | Commissioner Of Revenue (W/H) | 05/23/2025 | 8,560.12 |
| | | | Total for 5/23/2025: | 81,636.99 |

| Check No | Vendor No | Vendor Name | Check Date | Check Amount |
|---|---|---|---|---|
| 5819 | 1630 | XCEL Energy | 05/27/2025 | 501.50 |
| 5824 | 1941 | WEX, Inc. | 05/27/2025 | 121.75 |
| 5825 | 1592 | US Postal Service | 05/27/2025 | 1,108.82 |
| | | | Total for 5/27/2025: | 1,732.07 |
| 5832 | 1424 | N.B. Fire Relief Association | 05/28/2025 | 1,339.88 |
| 5834 | 1941 | WEX, Inc. | 05/28/2025 | 6,227.55 |
| | | | Total for 5/28/2025: | 7,567.43 |
| 5826 | 1592 | US Postal Service | 05/30/2025 | 1,208.98 |
| | | | Total for 5/30/2025: | 1,208.98 |
| | | | Report Total (23 checks): | 189,750.24 |

# Accounts Payable

## Computer Check Proof List by Vendor

User: TiffaniFolstad
Printed: 06/05/2025 - 3:24PM
Batch: 00001.06.2025 - 06052025

| Invoice No | Description | Amount | Pmt Date | Acct Number | Reference |
|---|---|---|---|---|---|
| Vendor: 1005 | ACE SOLID WASTE | | | Check Sequence: 1 | ACH Enabled: False |
| 11633606T067 | TRASH SERVICE | 63.36 | 06/05/2025 | 615-49550-50387 | |
| 11633606T067 | TRASH SERVICE | 149.77 | 06/05/2025 | 609-49750-50387 | |
| 11633606T067 | TRASH SERVICE | 261.52 | 06/05/2025 | 602-49450-50387 | |
| 11633606T067 | TRASH SERVICE | 69.43 | 06/05/2025 | 101-42280-50387 | |
| 11633606T067 | TRASH SERVICE | 111.22 | 06/05/2025 | 101-45500-50387 | |
| 11633606T067 | TRASH SERVICE | 210.45 | 06/05/2025 | 101-41940-50387 | |
| 11633606T067 | TRASH SERVICE | 335.64 | 06/05/2025 | 101-43000-50387 | |
| 11633606T067 | TRASH SERVICE | 107.28 | 06/05/2025 | 615-49550-50387 | |
| | Check Total: | 1,308.67 | | | |
| Vendor: 1662 | AMAZON CAPITAL SERVICES | | | Check Sequence: 2 | ACH Enabled: False |
| 13KT-9VY1-4PCM | OFFICE SUPPLIES | 146.54 | 06/05/2025 | 101-42110-50210 | |
| 1XQ1-WRLC-9G3V | FOLDING SHEARS | 110.30 | 06/05/2025 | 101-42110-50237 | |
| | Check Total: | 256.84 | | | |
| Vendor: 1646 | Ameritas | | | Check Sequence: 3 | ACH Enabled: False |
| 0606 AMER | OTHER RETIRMENT | 90.00 | 06/05/2025 | 101-00000-21705 | |
| | Check Total: | 90.00 | | | |
| Vendor: 1870 | Armand Advertising, LLC | | | Check Sequence: 4 | ACH Enabled: False |
| 1737 | | 658.87 | 06/05/2025 | 851-42280-50210 | |
| | Check Total: | 658.87 | | | |
| Vendor: 1036 | AT & T MOBILITY | | | Check Sequence: 5 | ACH Enabled: False |
| 287294264933X06 | MOBILE SERVICES | 2,386.12 | 06/05/2025 | 101-41420-50321 | |

| Invoice No | Description | Amount | Pmt Date | Acct Number | Reference |
|---|---|---|---|---|---|
| 287294265529X06 | MOBILE SERVICES | 1,508.42 | 06/05/2025 | 101-41420-50321 | |
| | Check Total: | 3,894.54 | | | |
| Vendor: 1974 | BEARING DISTRIBUTORS INC | | | Check Sequence: 6 | ACH Enabled: False |
| 9504373442 | WASTE WATER SEALANT | 1,064.90 | 06/05/2025 | 602-49450-50404 | |
| | Check Total: | 1,064.90 | | | |
| Vendor: 1049 | BELLBOY CORPORATION | | | Check Sequence: 7 | ACH Enabled: False |
| 0109857000 | N/A SALES | 73.02 | 06/05/2025 | 609-49750-50250 | |
| 0109857000 | OPERATING SUPPLIES | 243.73 | 06/05/2025 | 609-49750-50210 | |
| 0207782400 | LIQUOR | 849.10 | 06/05/2025 | 609-48000-50251 | |
| 0207782500 | THC | 91.65 | 06/05/2025 | 609-48000-50254 | |
| 0207851000 | LIQUOR | 1,964.80 | 06/05/2025 | 609-49750-50251 | |
| 0207851000 | WINE | 287.30 | 06/05/2025 | 609-49750-50253 | |
| 0207851100 | WINE | 113.65 | 06/05/2025 | 609-48000-50253 | |
| 0207851100 | LIQUOR | 969.15 | 06/05/2025 | 609-48000-50251 | |
| | Check Total: | 4,592.40 | | | |
| Vendor: 1052 | BERNICKS | | | Check Sequence: 8 | ACH Enabled: False |
| 10359362 | N/A SALES | 29.00 | 06/05/2025 | 609-48000-50250 | |
| 10359362 | BEER | 1,954.25 | 06/05/2025 | 609-48000-50252 | |
| 10359363 | THC | 85.00 | 06/05/2025 | 609-49750-50254 | |
| 10359364 | N/A SALES | 336.30 | 06/05/2025 | 609-49750-50250 | |
| 10359364 | BEER | 6,835.85 | 06/05/2025 | 609-49750-50252 | |
| 10359365 | N/A SALES | 138.18 | 06/05/2025 | 609-49750-50250 | |
| 10359366 | BEER CREDIT | -18.95 | 06/05/2025 | 609-49750-50252 | |
| 10361676 | BEER | 2,567.45 | 06/05/2025 | 609-48000-50252 | |
| 10361676 | N/A SALES | 28.80 | 06/05/2025 | 609-48000-50250 | |
| 10361677 | N/A SALES | 24.90 | 06/05/2025 | 609-48000-50250 | |
| 10361678 | BEER CREDIT | -52.04 | 06/05/2025 | 609-48000-50252 | |
| 10361679 | BEER | 5,995.90 | 06/05/2025 | 609-49750-50252 | |
| 10361679 | N/A SALES | 57.80 | 06/05/2025 | 609-49750-50250 | |
| 10361680 | BEER CREDIT | -26.98 | 06/05/2025 | 609-49750-50252 | |

| Invoice No | Description | Amount | Pmt Date | Acct Number | Reference |
|---|---|---|---|---|---|
| | Check Total: | 17,955.46 | | | |
| Vendor: 1066 | Breakthru Beverage MN | | | Check Sequence: 9 | ACH Enabled: False |
| 121561841 | LIQUOR | 383.89 | 06/05/2025 | 609-48000-50251 | |
| 121562042 | BEER | 292.50 | 06/05/2025 | 609-48000-50252 | |
| 121562057 | BEER | 1,620.00 | 06/05/2025 | 609-49750-50252 | |
| 121562264 | LIQUOR | 2,370.68 | 06/05/2025 | 609-49750-50251 | |
| 121562265 | WINE | 115.30 | 06/05/2025 | 609-49750-50253 | |
| 121562266 | N/A SALES | 25.45 | 06/05/2025 | 609-49750-50250 | |
| 121664012 | LIQUOR | 4,548.57 | 06/05/2025 | 609-48000-50251 | |
| 121664151 | LIQUOR | 63.00 | 06/05/2025 | 609-48000-50251 | |
| 121665133 | LIQUOR | 9,709.32 | 06/05/2025 | 609-49750-50251 | |
| | Check Total: | 19,128.71 | | | |
| Vendor: 1076 | Business Essentials | | | Check Sequence: 10 | ACH Enabled: False |
| FR-FQ-1540-1 | 4 DRAWER FIRE FILE | 1,715.00 | 06/05/2025 | 101-41940-50210 | |
| | Check Total: | 1,715.00 | | | |
| Vendor: 1082 | Capitol Beverage Sales LP | | | Check Sequence: 11 | ACH Enabled: False |
| 3139230 | N/A SALES | 100.68 | 06/05/2025 | 609-48000-50250 | |
| 3139230 | BEER | 509.30 | 06/05/2025 | 609-48000-50252 | |
| 3139230 | THC | 147.00 | 06/05/2025 | 609-48000-50254 | |
| 3139244 | BEER | 1,279.60 | 06/05/2025 | 609-49750-50252 | |
| 3139244 | N/A | 42.00 | 06/05/2025 | 609-49750-50250 | |
| 3139254 | THC CREDIT | -292.00 | 06/05/2025 | 609-48000-50254 | |
| 3139254 | N/A SALES CREDIT | -117.36 | 06/05/2025 | 609-48000-50250 | |
| | Check Total: | 1,669.22 | | | |
| Vendor: 1085 | Carlson Fire Extinguisher S&S | | | Check Sequence: 12 | ACH Enabled: False |
| 450551 | NEW SQUAD EQUIPMENT | 294.20 | 06/05/2025 | 701-70100-50550 | |
| 450552 | EXT RECHARGE | 45.00 | 06/05/2025 | 101-42110-50404 | |
| | Check Total: | 339.20 | | | |
| Vendor: 1905 | Cemstone Products Co., Inc. | | | Check Sequence: 13 | ACH Enabled: False |

| Invoice No | Description | Amount | Pmt Date | Acct Number | Reference |
|---|---|---|---|---|---|
| 7748768 | ASPHALT PRODUCT | 609.93 | 06/05/2025 | 101-43000-50224 | |
| | Check Total: | 609.93 | | | |
| Vendor: 2260 | CENTRA HOMES | | | Check Sequence: 14 | ACH Enabled: False |
| BP 13092 | TEMP CO DEPOSIT REFUND | 2,500.00 | 06/05/2025 | 101-00000-22000 | |
| BP 13095 | TEMP CO DEPOSIT REFUND | 2,500.00 | 06/05/2025 | 101-00000-22000 | |
| BP 13357 | TEMP CO DEPOSIT REFUND | 2,500.00 | 06/05/2025 | 101-00000-22000 | |
| BP 13363 | TEMP CO DEPOSIT REFUND | 2,500.00 | 06/05/2025 | 101-00000-22000 | |
| | Check Total: | 10,000.00 | | | |
| Vendor: 1103 | Chisago County Recorder | | | Check Sequence: 15 | ACH Enabled: False |
| 202500000036 | A 681769 and A 681921 | 46.00 | 06/05/2025 | 101-41400-50443 | |
| 202500000036 | A 681769 and A 681921 MEMBERS CU | 46.00 | 06/05/2025 | 101-00000-21172 | |
| | Check Total: | 92.00 | | | |
| Vendor: 1122 | Crystal Springs Ice | | | Check Sequence: 16 | ACH Enabled: False |
| 04-500071 | N/A SALES | 81.44 | 06/05/2025 | 609-49750-50250 | |
| 04-500134 | N/A SALES | 66.80 | 06/05/2025 | 609-48000-50250 | |
| 04-500138 | N/A SALES | 206.46 | 06/05/2025 | 609-49750-50250 | |
| | Check Total: | 354.70 | | | |
| Vendor: 1129 | DAHLHEIMER DISTRIBUTING | | | Check Sequence: 17 | ACH Enabled: False |
| 2475206 | LIQUOR CREDIT | -5,400.00 | 06/05/2025 | 609-49750-50251 | |
| 2476635 | THC | 145.50 | 06/05/2025 | 609-48000-50254 | |
| 2476636 | LIQUOR | 49.50 | 06/05/2025 | 609-48000-50251 | |
| 2476637 | N/A SALES | 33.85 | 06/05/2025 | 609-48000-50250 | |
| 2476638 | BEER | 4,105.10 | 06/05/2025 | 609-48000-50252 | |
| 2476798 | THC | 34.50 | 06/05/2025 | 609-49750-50254 | |
| 2476799 | LIQUOR | 1,932.60 | 06/05/2025 | 609-49750-50251 | |
| 2476800 | N/A SALES | 395.25 | 06/05/2025 | 609-49750-50250 | |
| 2476800 | KEG DEPOSIT | 30.00 | 06/05/2025 | 609-00000-11560 | |
| 2476801 | BEER | 17,644.95 | 06/05/2025 | 609-49750-50252 | |
| 2476808 | BEER CREDIT | -266.10 | 06/05/2025 | 609-49750-50252 | |
| 2476824 | BEER CREDIT | -48.80 | 06/05/2025 | 609-48000-50252 | |

| Invoice No | Description | Amount | Pmt Date | Acct Number | Reference |
|---|---|---|---|---|---|
| 2482041 | LIQUOR | 94.00 | 06/05/2025 | 609-49750-50251 | |
| 2482042 | THC | 276.00 | 06/05/2025 | 609-49750-50254 | |
| 2482043 | BEER | 6,469.50 | 06/05/2025 | 609-49750-50252 | |
| 2482044 | N/A SALES | 240.10 | 06/05/2025 | 609-49750-50250 | |
| 2482183 | N/A SALES | 33.85 | 06/05/2025 | 609-48000-50250 | |
| 2482185 | LIQUOR | 146.00 | 06/05/2025 | 609-48000-50251 | |
| 2482186 | BEER | 2,473.70 | 06/05/2025 | 609-48000-50252 | |
| | Check Total: | 28,389.50 | | | |
| Vendor: 2132 | Data-Smart Computers, Inc. | | | Check Sequence: 18 | ACH Enabled: False |
| 92532 | SONIC WALL PROTECTION | 5,642.56 | 06/05/2025 | 101-41420-50244 | |
| 92754 | SONIC WALL PROTECTION | 762.63 | 06/05/2025 | 101-41420-50244 | |
| CM1611 | SALES TAX REFUND | -57.31 | 06/05/2025 | 101-41420-50244 | |
| | Check Total: | 6,347.88 | | | |
| Vendor: 1134 | Demars Signs Inc. | | | Check Sequence: 19 | ACH Enabled: False |
| 7321 | TROUBLESHOOT SIGN | 250.00 | 06/05/2025 | 101-41940-50300 | |
| | Check Total: | 250.00 | | | |
| Vendor: 1143 | Dr Pepper Snapple Group | | | Check Sequence: 20 | ACH Enabled: False |
| 4849204351 | N/A SALES | 223.50 | 06/05/2025 | 609-49750-50250 | |
| | Check Total: | 223.50 | | | |
| Vendor: 1146 | Earl F. Andersen | | | Check Sequence: 21 | ACH Enabled: False |
| 138532 | STREET SIGNS | 5,459.00 | 06/05/2025 | 612-49700-50407 | |
| 138533 | STREET SIGNS | 496.10 | 06/05/2025 | 101-43000-50226 | |
| 138534 | STREET SIGNS | 284.50 | 06/05/2025 | 101-43000-50226 | |
| | Check Total: | 6,239.60 | | | |
| Vendor: 1173 | Evergreen Recycling, LLC | | | Check Sequence: 22 | ACH Enabled: False |
| 3714 | ANNUAL CLEAN UP EXPENSE | 1,542.00 | 06/05/2025 | 101-43000-50387 | |
| | Check Total: | 1,542.00 | | | |
| Vendor: 1981 | EXPRESS SERVICES INC | | | Check Sequence: 23 | ACH Enabled: False |

| Invoice No | Description | Amount | Pmt Date | Acct Number | Reference |
|---|---|---|---|---|---|
| 32347272 | 25 HOURS TEMP EMP | 725.00 | 06/05/2025 | 101-41400-50300 | |
| 32389412 | 25 HOURS TEMP EMP | 725.00 | 06/05/2025 | 101-41400-50300 | |
| | Check Total: | 1,450.00 | | | |
| Vendor: 2205 | FES, Inc. | | | Check Sequence: 24 | ACH Enabled: False |
| 21509 | BOOTS | 299.99 | 06/05/2025 | 101-42280-50201 | |
| | Check Total: | 299.99 | | | |
| Vendor: 1706 | Flaherty & Hood, P.A. | | | Check Sequence: 25 | ACH Enabled: False |
| 22994 | GENERAL MUNICIPAL MATTERS | 461.94 | 06/05/2025 | 101-41610-50304 | |
| 22994 | GENERAL MUNICIPAL MATTERS | 430.00 | 06/05/2025 | 609-48000-50304 | |
| 22994 | GENERAL MUNICIPAL MATTERS | 3,918.75 | 06/05/2025 | 201-46500-50304 | |
| | Check Total: | 4,810.69 | | | |
| Vendor: 1198 | Frontier Precision, Inc. | | | Check Sequence: 26 | ACH Enabled: False |
| 326590 | ANNUAL SOFTWARE MAINTENANCE | 663.73 | 06/05/2025 | 101-41940-50300 | |
| | Check Total: | 663.73 | | | |
| Vendor: 1222 | Granite Electronics | | | Check Sequence: 27 | ACH Enabled: False |
| 2500323 | RADIO REPAIR SHIPPING | 20.00 | 06/05/2025 | 101-42280-50320 | |
| | Check Total: | 20.00 | | | |
| Vendor: 1239 | Hawkins, Inc. | | | Check Sequence: 28 | ACH Enabled: False |
| 7082539 | WASTE WATER CHEMICALS | 1,316.58 | 06/05/2025 | 602-49450-50210 | |
| | Check Total: | 1,316.58 | | | |
| Vendor: 2142 | INSIGHT BREWING COMPANY, LLC | | | Check Sequence: 29 | ACH Enabled: False |
| 23637 | BEER | 50.00 | 06/05/2025 | 609-49750-50252 | |
| 244118 | THC | 60.00 | 06/05/2025 | 609-49750-50254 | |
| 244118 | BEER | 59.95 | 06/05/2025 | 609-49750-50252 | |
| | Check Total: | 169.95 | | | |
| Vendor: 1279 | JOHNSON BROTHERS LIQUOR CO | | | Check Sequence: 30 | ACH Enabled: False |
| 2795089 | LIQUOR | 1,797.32 | 06/05/2025 | 609-49750-50251 | |

| Invoice No | Description | Amount | Pmt Date | Acct Number | Reference |
|---|---|---|---|---|---|
| 2795090 | LIQUOR | 421.97 | 06/05/2025 | 609-49750-50251 | |
| 2795091 | LIQUOR | 10,484.97 | 06/05/2025 | 609-49750-50251 | |
| 2795092 | LIQUOR | 4,035.24 | 06/05/2025 | 609-48000-50251 | |
| 2800426 | LIQUOR | 1,676.90 | 06/05/2025 | 609-49750-50251 | |
| 2800427 | WINE | 93.78 | 06/05/2025 | 609-49750-50253 | |
| 2800428 | LIQUOR | 2,676.50 | 06/05/2025 | 609-49750-50251 | |
| 2800429 | WINE | 746.40 | 06/05/2025 | 609-49750-50253 | |
| 2800430 | LIQUOR | 345.68 | 06/05/2025 | 609-49750-50251 | |
| 2800431 | LIQUOR | 150.34 | 06/05/2025 | 609-48000-50251 | |
| 2800432 | LIQUOR | 1,371.67 | 06/05/2025 | 609-48000-50251 | |
| | Check Total: | 23,800.77 | | | |
| Vendor: 2259 | KODEX, INC. | | | Check Sequence: 31 | ACH Enabled: False |
| CS8V7JHN-0001 | Invoice for 24010628 | 245.00 | 06/05/2025 | 101-42110-50300 | |
| | Check Total: | 245.00 | | | |
| Vendor: 1685 | Lakes Brewing Company | | | Check Sequence: 32 | ACH Enabled: False |
| 002257 | BEER | 98.00 | 06/05/2025 | 609-49750-50252 | |
| | Check Total: | 98.00 | | | |
| Vendor: 1302 | Law Enforcement Labor Services | | | Check Sequence: 33 | ACH Enabled: False |
| FOR JUNE 2025 | PD UNION DUES | 1,022.00 | 06/05/2025 | 101-00000-21708 | |
| | Check Total: | 1,022.00 | | | |
| Vendor: 1305 | c/o Berkley Risk Administrators Company League Of MN Cities Ins. Trust-WC | | | Check Sequence: 34 | ACH Enabled: False |
| 517617 | DED WC CLAIM 517617-PD 4/19/2025 | 1,000.00 | 06/05/2025 | 101-42110-50151 | |
| | Check Total: | 1,000.00 | | | |
| Vendor: 1804 | LGI Homes, Inc. | | | Check Sequence: 35 | ACH Enabled: False |
| BP12681 | TEMP CO REFUND BP 12681 | 2,500.00 | 06/05/2025 | 101-00000-22000 | |
| BP12684 | TEMP CO REFUND BP 12684 | 2,500.00 | 06/05/2025 | 101-00000-22000 | |
| BP12811 | TEMP CO REFUND BP 12811 | 2,500.00 | 06/05/2025 | 101-00000-22000 | |
| BP12814 | TEMP CO REFUND BP 12814 | 2,500.00 | 06/05/2025 | 101-00000-22000 | |

| Invoice No | Description | Amount | Pmt Date | Acct Number | Reference |
|---|---|---|---|---|---|
| | Check Total: | 10,000.00 | | | |
| Vendor: 1176 | M Health Fairview | | | Check Sequence: 36 | ACH Enabled: False |
| 15008154536 | VISIT 15008154536 ON 5/6/2025 | 151.00 | 06/05/2025 | 101-42110-50314 | |
| 15008289648 | VISIT 15008289648 ON 4/21/2025 | 603.04 | 06/05/2025 | 101-42110-50314 | |
| 15008358430 | VISIT 15008358430 ON 5/13/2025 | 507.04 | 06/05/2025 | 101-42280-50314 | |
| 15008374463 | VISIT 15008374463 ON 5/12/2025 | 507.04 | 06/05/2025 | 101-42280-50314 | |
| | Check Total: | 1,768.12 | | | |
| Vendor: 1327 | MACQUEEN EQUIPMENT INC. | | | Check Sequence: 37 | ACH Enabled: False |
| W16491 | VAC TRUCK REMOTE REPLACEMENT | 4,701.23 | 06/05/2025 | 602-49450-50407 | |
| | Check Total: | 4,701.23 | | | |
| Vendor: 1643 | McDonald Distributing | | | Check Sequence: 38 | ACH Enabled: False |
| 807719 | LIQUOR | 152.90 | 06/05/2025 | 609-49750-50251 | |
| 807720 | N/A SALES | 195.45 | 06/05/2025 | 609-49750-50250 | |
| 807720 | LIQUOR | 33.60 | 06/05/2025 | 609-49750-50251 | |
| 807720 | THC | 143.52 | 06/05/2025 | 609-49750-50254 | |
| 807720 | BEER | 6,057.90 | 06/05/2025 | 609-49750-50252 | |
| 807734 | BEER | 5,250.55 | 06/05/2025 | 609-48000-50252 | |
| 807734 | LIQUOR | 106.60 | 06/05/2025 | 609-48000-50251 | |
| 808122 | BEER CREDIT | -2,038.60 | 06/05/2025 | 609-48000-50252 | |
| 808124 | KEG DEPOSIT CREDIT | -60.00 | 06/05/2025 | 609-00000-11560 | |
| 808124 | BEER CREDIT | -512.75 | 06/05/2025 | 609-49750-50252 | |
| 808922 | BEER CREDIT | -85.60 | 06/05/2025 | 609-49750-50252 | |
| 809052 | LIQUOR | 60.30 | 06/05/2025 | 609-49750-50251 | |
| 809053 | BEER | 6,901.20 | 06/05/2025 | 609-49750-50252 | |
| 809053 | N/A SALES | 216.85 | 06/05/2025 | 609-49750-50250 | |
| 809058 | BEER | 262.10 | 06/05/2025 | 609-48000-50252 | |
| 809128 | BEER CREDIT | -79.65 | 06/05/2025 | 609-49750-50252 | |
| | Check Total: | 16,604.37 | | | |
| Vendor: 1348 | Metro Sales Inc. | | | Check Sequence: 39 | ACH Enabled: False |
| 2803341 | COPY MACHINE LEASE | 259.00 | 06/05/2025 | 101-41420-50219 | |

| Invoice No | Description | Amount | Pmt Date | Acct Number | Reference |
|---|---|---|---|---|---|
| | Check Total: | 259.00 | | | |
| Vendor: 1353 | MIDCONTINENT | | | Check Sequence: 40 | ACH Enabled: False |
| 16640100114749 | INTERNET 5/25 TO 6/24 | 920.39 | 06/05/2025 | 101-41420-50243 | |
| | Check Total: | 920.39 | | | |
| Vendor: 1364 | Minnesota Elevator, Inc. | | | Check Sequence: 41 | ACH Enabled: False |
| 1131516 | MONTHLY ELEVATOR INSPECTION | 140.00 | 06/05/2025 | 101-41940-50300 | |
| | Check Total: | 140.00 | | | |
| Vendor: 1404 | MN TEAMSTERS #320 | | | Check Sequence: 42 | ACH Enabled: False |
| FOR JUNE 2025 | UNIION DUES | 1,804.00 | 06/05/2025 | 101-00000-21708 | |
| | Check Total: | 1,804.00 | | | |
| Vendor: 1411 | Moose Lake Brewing Co. LLC | | | Check Sequence: 43 | ACH Enabled: False |
| SB22-003 | BEER | 66.00 | 06/05/2025 | 609-48000-50252 | |
| SB22-004 | BEER | 90.00 | 06/05/2025 | 609-49750-50252 | |
| | Check Total: | 156.00 | | | |
| Vendor: 2203 | Morris Electronics, Inc. | | | Check Sequence: 44 | ACH Enabled: False |
| 12626 | PD IT SUPPORT 3/3/2025 | 62.50 | 06/05/2025 | 101-41420-50300 | |
| 13751 | PD IT SUPPORT 5/7/2025 | 62.50 | 06/05/2025 | 101-41420-50300 | |
| 13760 | COUNCIL IT SUPPORT 5/07/2025 | 125.00 | 06/05/2025 | 101-41420-50300 | |
| 13762 | CLERK IT SUPPORT 5/8/2025 | 62.50 | 06/05/2025 | 101-41420-50300 | |
| 13841 | PD IT SUPPORT 5/22/2025 | 687.50 | 06/05/2025 | 101-41420-50300 | |
| 13864 | PD IT SUPPORT 5/12/2025 | 187.50 | 06/05/2025 | 101-41420-50300 | |
| 13885 | PD & PW IT SUPPORT 5/12/2025 | 218.75 | 06/05/2025 | 101-41420-50300 | |
| 13893 | FIN IT SUPPORT 5/13/2025 | 62.50 | 06/05/2025 | 101-41420-50300 | |
| 13903 | PD IT SUPPORT 5/14/2025 | 93.75 | 06/05/2025 | 101-41420-50300 | |
| 13936 | ON SITE SERVICE 5/19/2025 | 3,029.50 | 06/05/2025 | 101-41420-50300 | |
| 13949 | LS IT SUPPORT 5/21/2025 | 93.75 | 06/05/2025 | 101-41420-50300 | |
| 13961 | PD IT SUPPORT 5/21/2025 | 250.00 | 06/05/2025 | 101-41420-50300 | |
| | Check Total: | 4,935.75 | | | |

| Invoice No | Description | Amount | Pmt Date | Acct Number | Reference |
|---|---|---|---|---|---|
| Vendor: 1423 | N.B. Area Public Schools-Fuel | | | Check Sequence: 45 | ACH Enabled: False |
| 2025-148 | MOTOR FUELS-APR-FD | 163.00 | 06/05/2025 | 101-42280-50212 | |
| | Check Total: | 163.00 | | | |
| Vendor: 2047 | NEONLINK LLC | | | Check Sequence: 46 | ACH Enabled: False |
| 3115 | WEB PORTAL SUBSCRIPTION | 84.20 | 06/05/2025 | 602-49450-50300 | |
| 3115 | WEB PORTAL SUBSCRIPTION | 84.20 | 06/05/2025 | 615-49550-50300 | |
| 3115 | WEB PORTAL SUBSCRIPTION | 84.20 | 06/05/2025 | 612-49700-50300 | |
| | Check Total: | 252.60 | | | |
| Vendor: 1453 | Olson Power & Equipment | | | Check Sequence: 47 | ACH Enabled: False |
| E02669 | NEW MOWER | 35,382.00 | 06/05/2025 | 701-70100-50580 | |
| | Check Total: | 35,382.00 | | | |
| Vendor: 1955 | Sara Paul | | | Check Sequence: 48 | ACH Enabled: False |
| Q2 2023 | Q2 2023 COMM ATT REISSUE CK | 75.00 | 06/05/2025 | 101-41110-50331 | |
| | Check Total: | 75.00 | | | |
| Vendor: 1474 | PHILLIPS WINE & SPIRITS, INC | | | Check Sequence: 49 | ACH Enabled: False |
| 6981536 | LIQUOR | 971.54 | 06/05/2025 | 609-49750-50251 | |
| 6981537 | N/A SALES | 275.04 | 06/05/2025 | 609-49750-50250 | |
| 6981538 | LIQUOR | 100.99 | 06/05/2025 | 609-48000-50251 | |
| 6981539 | WINE | 76.24 | 06/05/2025 | 609-48000-50253 | |
| 6985544 | LIQUOR | 612.48 | 06/05/2025 | 609-49750-50251 | |
| 6985545 | WINE | 662.12 | 06/05/2025 | 609-49750-50253 | |
| 6985546 | LIQUOR | 154.68 | 06/05/2025 | 609-49750-50251 | |
| 6985547 | WINE | 253.44 | 06/05/2025 | 609-48000-50253 | |
| | Check Total: | 3,106.53 | | | |
| Vendor: 1884 | SUSO 4 North Branch, LP Pine Tree Commercial Realty | | | Check Sequence: 50 | ACH Enabled: False |
| FOR JUNE 2025 | STORE 2 RENT | 2,507.22 | 06/05/2025 | 609-48000-50412 | |
| | Check Total: | 2,507.22 | | | |
| Vendor: 2232 | Pryes Brewing Company LLC | | | Check Sequence: 51 | ACH Enabled: False |

| Invoice No | Description | Amount | Pmt Date | Acct Number | Reference |
|---|---|---|---|---|---|
| W-98425 | BEER | 107.00 | 06/05/2025 | 609-49750-50252 | |
| | Check Total: | 107.00 | | | |
| Vendor: 1494 | Red Bull Distribution Company | | | Check Sequence: 52 | ACH Enabled: False |
| 2025859909 | N/A SALES | 84.00 | 06/05/2025 | 609-49750-50250 | |
| | Check Total: | 84.00 | | | |
| Vendor: 2066 | RMB Environmental Laboratories, Inc. | | | Check Sequence: 53 | ACH Enabled: False |
| B017482 | WASTEWATER LAB SAMPLES | 142.10 | 06/05/2025 | 602-49450-50315 | |
| B017483 | WATER PLANT SAMPLES | 105.00 | 06/05/2025 | 615-49550-50315 | |
| | Check Total: | 247.10 | | | |
| Vendor: 2257 | Row Sewer Service | | | Check Sequence: 54 | ACH Enabled: False |
| 10 | PARK TOILET RENTALS | 1,950.00 | 06/05/2025 | 101-45000-50415 | |
| 11 | PARK TOILET RENTALS | 420.00 | 06/05/2025 | 101-45000-50415 | |
| 12 | PARK TOILET RENTALS | 420.00 | 06/05/2025 | 101-45000-50415 | |
| 13 | PARK TOILET RENTALS 5/29-6/25 | 1,950.00 | 06/05/2025 | 101-45000-50415 | |
| 8 | PARK TOILET RENTALS | 1,950.00 | 06/05/2025 | 101-45000-50415 | |
| | Check Total: | 6,690.00 | | | |
| Vendor: 2116 | Amy Schweigert | | | Check Sequence: 55 | ACH Enabled: False |
| 1173 | NBPD Therapy APRIL 2025 | 1,260.00 | 06/05/2025 | 101-42110-50300 | |
| | Check Total: | 1,260.00 | | | |
| Vendor: 1520 | Sealtech, Inc | | | Check Sequence: 56 | ACH Enabled: False |
| 1523 | FOX RUN/BIRCH-WATER MAIN BREAK | 3,011.00 | 06/05/2025 | 615-49550-50407 | |
| 1524 | ELM ST REPAIR-WATER MAIN BREAK | 9,744.00 | 06/05/2025 | 615-49550-50407 | |
| 1525 | 2025 CRACK REPAIR VARIOUS ROADS | 70,907.40 | 06/05/2025 | 101-43000-50307 | |
| | Check Total: | 83,662.40 | | | |
| Vendor: 1534 | SOUTHERN GLAZERS WINE & SPIRITS OF MINNESOTA | | | Check Sequence: 57 | ACH Enabled: False |
| 2626450 | WINE | 45.96 | 06/05/2025 | 609-48000-50253 | |
| 2626450 | LIQUOR | 1,918.30 | 06/05/2025 | 609-48000-50251 | |
| 2626954 | LIQUOR | 2,612.57 | 06/05/2025 | 609-49750-50251 | |

| Invoice No | Description | Amount | Pmt Date | Acct Number | Reference |
|---|---|---|---|---|---|
| 2626955 | WINE | 116.94 | 06/05/2025 | 609-49750-50253 | |
| 2629093 | LIQUOR | 298.55 | 06/05/2025 | 609-48000-50251 | |
| 2629093 | WINE | 159.98 | 06/05/2025 | 609-48000-50253 | |
| 2629599 | LIQUOR | 508.97 | 06/05/2025 | 609-49750-50251 | |
| 2629600 | WINE | 505.70 | 06/05/2025 | 609-49750-50253 | |
| | Check Total: | 6,166.97 | | | |
| Vendor: 2237 | STANDARD INSURANC COMPANY - RC | | | Check Sequence: 58 | ACH Enabled: False |
| ER 6/2025 | BASIC LIFE/STD - 06/2025 | 958.27 | 06/05/2025 | 101-00000-21715 | |
| ER 6/2025 | BASIC LIFE/STD - 06/2025 | 293.25 | 06/05/2025 | 101-00000-21714 | |
| FOR 6/2025 | VOL LIFE/LTD - 06/2025 | 937.99 | 06/05/2025 | 101-00000-21715 | |
| FOR 6/2025 | VOL LIFE/LTD - 06/2025 | 482.68 | 06/05/2025 | 101-00000-21714 | |
| | Check Total: | 2,672.19 | | | |
| Vendor: 1542 | Staples | | | Check Sequence: 59 | ACH Enabled: False |
| 7005437763 | PENS, FILE CABINET, BATTERIES | 176.56 | 06/05/2025 | 101-41940-50210 | |
| | Check Total: | 176.56 | | | |
| Vendor: 1597 | Vessco, Inc. | | | Check Sequence: 60 | ACH Enabled: False |
| 97715 | SCREENS FOR WASTE WATER | 3,745.59 | 06/05/2025 | 602-49450-50404 | |
| | Check Total: | 3,745.59 | | | |
| Vendor: 1598 | Viking Coca-Cola Bottling Co. | | | Check Sequence: 61 | ACH Enabled: False |
| 3673894 | N/A SALES | 202.20 | 06/05/2025 | 609-49750-50250 | |
| | Check Total: | 202.20 | | | |
| Vendor: 1611 | WATSON COMPANY | | | Check Sequence: 62 | ACH Enabled: False |
| 149762 | N/A SALES | 1,592.09 | 06/05/2025 | 609-49750-50250 | |
| | Check Total: | 1,592.09 | | | |
| Vendor: 1621 | Windstream | | | Check Sequence: 63 | ACH Enabled: False |
| FOR JUNE | ACCT 11734875 FOR JUNE 2025 | 319.26 | 06/05/2025 | 101-41420-50321 | |
| | Check Total: | 319.26 | | | |

| Invoice No | Description | Amount | Pmt Date | Acct Number | Reference |
|---|---|---|---|---|---|
| Vendor: 1904 | Sharon Wright | | | Check Sequence: 64 | ACH Enabled: False |
| MN GFOA | NB TO MAPLEWOOD & RETURN | 51.80 | 06/05/2025 | 101-41500-50331 | |
| | Check Total: | 51.80 | | | |
| Vendor: 1635 | Zarnoth Brush Works, Inc. | | | Check Sequence: 65 | ACH Enabled: False |
| 202259 | STREET SWEEPER BROOMS | 540.00 | 06/05/2025 | 612-49700-50404 | |
| | Check Total: | 540.00 | | | |
| | Total for Check Run: | 331,912.00 | | | |
| | Total of Number of Checks: | 65 | | | |

City of North Branch
Special Council Meeting 6:30pm
Minutes
May 20, 2025

1. **Call to Order**
   Mayor Schieber called the meeting to order at 6:00 pm

2. **Pledge of Allegiance**
   Mayor Schieber led the Pledge of Allegiance

3. **Roll Call**
   Council Members Goulet, Canada, Ibinger, Meacham, Mayor Schieber.

4. **Agenda Approval**
   **a.** Motion by Member Ibinger, seconded by Member Canada, all aye, motion carried unanimously.

5. Public comment - None

6. Consent Agenda - None

7. Staff Reports
   a. Consider approval of the partial release and authorization to execute documents relating to the Purchase agreement with Sunrise River Commons LLC. CDD Nate Sondrol led the discussion on the closing of City owned properties. EDA was in full support of the release. Motion by Member Goulet to approve the partial release and authorize staff to execute documents as presented. Seconded by Member Canada. All aye, passed unanimously.
   b. Evaluation of performance of City Administrator under Minn Statute 13D.05, Sub 3.a. The mayor asked if Administrator Hill requests to have the meeting open or closed. Hill requests that it be closed. Meacham made a motion to close the meeting, seconded by Ibinger. All Aye passed unanimously. The meeting is closed at 6:04pm.

      Mayor Schieber motioned to come out of closed session at 9:48pm, seconded by Canada, All aye, passed unanimously.

8. Mayor/Council reports - None

9. Adjournment - Mayor Schieber made a motion to adjourn at 9:49pm, seconded by Member Canada, all aye, passed unanimously.

_____

Kevin Schieber, Mayor

ATTEST:

_____

Matthew Hill, City Administrator

City of North Branch
Special Council Meeting - Joint workshop with Planning Commission 6:00pm
Minutes
May 27, 2025

1. **Call to Order**
   Mayor Schieber called the meeting to order at 6:00 pm

2. **Pledge of Allegiance**
   Mayor Schieber led the Pledge of Allegiance

3. **Roll Call**
   Council Members Goulet, Canada, Ibinger, Meacham, Mayor Schieber. Planning Commissioners Ehalt, Otto, Schaefer, Chairman Cich

4. **Agenda Approval**
   **a.** Motion by Member Ibinger, seconded by Member Canada, all aye, motion carried unanimously.

5. **Staff Reports**
   a. Workshop with City Council and Planning Commission to discuss City Code 66.6 regarding single family dwellings in the R-3 zoning district. City Planner Ryan Saltis sets the background, May 6th Planning Commission heard the Cedar Ridge request to have single family dwellings in the R-3 zoning district. There is a discrepancy between the zoning ordinance and the dimensional designs standards. Hearing brought thought on allowing single family housing while still meeting density requirements in the R-3. Perhaps create a new zoning ordinance just for apartments. Surrounding communities, Isanti does have separate zoning for apartments with the highest density in single family zoning 6 units per acre, and Cambridge does allow single family in R-3. Nate Sondrol says that 265 acres of R-3 zoned properties. Big question is should we allow single family in R-3. Staff wants to create clarity between the zoning ordinance and dimensional designs standards. Cedar Ridge Owner expressed that they would be providing apartments and meeting the density standards. Discussion extended with Planning Commission members and Council Members. Direction requested by Nate Sondrol for the Council action on June 10 Council Meeting. Agree with the layout, but if it is ok there, is it ok for all R-3. Any additional comments are to be directed to Nate and Ryan.

6. Adjournment - Mayor Schieber made a motion to adjourn at 6:52pm, seconded by Member Canada, all aye, passed unanimously.

_____
Kevin Schieber, Mayor

ATTEST:

_____

Matthew Hill, City Administrator

North Branch City Council Minutes

TUESDAY, MAY 27, 2025, 7:00 PM

City Hall, 6408 Elm St., North Branch, MN 55056

Members present:

Robert Canada, Jeff Goulet, Mayor Kevin Schieber, Patrick Meacham, Jim Ibinger and staff.

1. CALL TO ORDER
    a. Mayor Schieber called the meeting to order at 7:00 pm and led the Pledge of Allegiance.
2. PLEDGE OF ALLEGIANCE
3. ROLL CALL – Robert Canada, Jeff Goulet, Mayor Kevin Schieber, Patrick Meacham, Jim Ibinger and various staff.
4. AGENDA APPROVAL – Member Ibinger made a motion to accept agenda as presented, seconded by Member Meacham, All Aye, passed unanimously.
5. PRESENTATION & PROCLAMATION -
    a. Police Chief Dan Meyer led the oath of office and swearing in of Officer Kendra Rock. Officer Rock's family and fellow officers were present to congratulate her.
6. PUBLIC COMMENT –
    a. None
7. CONSENT AGENDA – motion by Member Meacham, second by Member Canada, All Aye, passed unanimously.
    a. Claims
    b. Approval of Minutes - Regular Meeting - May 13, 2025, 7:00 PM
    c. Approval of Resolution R-195-2025 Approving Plans and Specifications and authorize staff to advertise for bids for the Flink Ave Phase II Trail
    d. Approval of Resolution R-194-2025 approving the concrete sidewalk and bench pad quote for the Northwood Park DNR Outdoor Recreation Grant Project.

e. Approval of Resolution R-189-2025 approving the Final Plat for Preserve at Spring Hill 2nd Addition.

f. Approval of Resolution R-193-2025 approving Co. Rd. 30 Pay Request #1.

8. PUBLIC HEARINGS

   a. None

9. STAFF REPORTS

   a. April Finance Report - Finance Director Sharon Wright presented the finance report for the month of April. She walked through the funds and discussed YTD balances and comparisons to previous years. All funds are projected out to show a net profit.

   b. Preliminary 2026 General fund Budget discussion - Finance Director Sharon Wright presented the preliminary budget for 2026 which included staff recommendations for their departments.

   c. Human Resources Update - HR Generalist Travis Miles gave his report on the activities of the Human Resources department.

10. MAYOR/CITY COUNCIL

   a. Recind Conclusion of Evaluation of the Performance of the City Administrator under Minn. Statute 13D.05, Subd. 3(a) on May 20, 2025 and continue and reconvene evaluation of the performance of City Administrator under Minn. Statute 13D.05, Subd. 3(a). Mayor asked Administrator Hill if he would like the meeting to be open or closed, Hill requested the meeting be closed. Mayor Scheiber made a motion to go into closed session, seconded by Member Canada, All Aye, passed unanimously. Council moved into closed session.

   Mayor Schieber made a motion to open the meeting at 9:33pm, seconded by Member Canada, all aye, passed unanimously.

11. ADJOURNMENT

a. Motion by Mayor Schieber to adjourn the meeting at 9:34 PM, seconded by Member Canada, all aye, passed unanimously.

_____

Kevin Schieber, Mayor

ATTEST:

_____

Matthew Hill, City Administrator

**City of North Branch**
**Staff Report**

**Prepared By: Matthew Hill, City Administrator**

**Presenter: Matthew Hill, City Administrator**

**Date: 06/03/2025**

**Board & Commission: City Council**

**Subject: Approval of LG214 & LG215 gambling permits for American Legion Post 85**

---

The City of North Branch has received a LG214 & LG215 Premises Permit Application for the American Legion to host their gambling enterprise at the Muddy Cow North Branch LLC.

**Voting Requirements:**

| | |
|---|---|
| **Voting Options** | **Simple Majority** |

# LG214 Premises Permit Application

**Annual Fee $150 (NON-REFUNDABLE)**

## REQUIRED ATTACHMENTS TO LG214

1. If the premises is leased, attach a copy of your lease. Use **LG215 Lease for Lawful Gambling Activity.**
2. $150 annual premises permit fee, for each permit (non-refundable). Make check payable to "**State of Minnesota**."

**Mail the application and required attachments to:**
Minnesota Gambling Control Board
1711 West County Road B, Suite 300 South
Roseville, MN 55113

**Questions?** Call 651-539-1900 and ask for Licensing.

## ORGANIZATION INFORMATION

Organization Name: American Legion Post 85 North Branch License Number: 00140

Chief Executive Officer (CEO) Keith R. Hals Daytime Phone: (612) 719-8651

Gambling Manager: Michael Johnson Daytime Phone: (651) 528-1969

## GAMBLING PREMISES INFORMATION

Current name of site where gambling will be conducted: Muddy Cow North Branch LLC

List any previous names for this location:

N/A

Street address where premises is located: 5896 Old Main St.
(Do not use a P.O. box number or mailing address.)

| City: **OR** Township: | County: | Zip Code: |
|---|---|---|
| North Branch | Chisago | 55056 |

Does your organization own the building where the gambling will be conducted?

☐ **Yes** ☒ **No** **If no,** attach LG215 Lease for Lawful Gambling Activity.

A lease is not required if only a raffle will be conducted.

Is any other organization conducting gambling at this site? ☒ Yes ☐ No ☐ Don't know

Note: Bar bingo can only be conducted at a site where another form of lawful gambling is being conducted by the applying organization or another permitted organization. Electronic games can only be conducted at a site where paper pull-tabs are played.

Has your organization previously conducted gambling at this site? ☐ Yes ☒ No ☐ Don't know

## GAMBLING BANK ACCOUNT INFORMATION; MUST BE IN MINNESOTA

Bank Name: Associated Bank Bank Account Number: 2280487683

Bank Street Address: 38860 10th Ave. City: North Branch State: **MN** Zip Code: 55056

## ALL TEMPORARY AND PERMANENT OFF-SITE STORAGE SPACES

| Address (Do not use a P.O. box number): | City: | State: | Zip Code: |
|---|---|---|---|
| 6028 410th St. | North Branch | MN | 55056 |
| | | MN | |
| | | MN | |

## ACKNOWLEDGMENT BY LOCAL UNIT OF GOVERNMENT: APPROVAL BY RESOLUTION

**CITY APPROVAL**
**for a gambling premises**
**located within city limits**

City Name: North Branch

Date Approved by City Council: _____

Resolution Number: _____
(If none, attach meeting minutes.)

Signature of City Personnel:

_____

Title: _____ Date Signed: _____

**Local unit of government must sign.**

**COUNTY APPROVAL**
**for a gambling premises**
**located in a township**

County Name: _____

Date Approved by County Board: _____

Resolution Number: _____
(If none, attach meeting minutes.)

Signature of County Personnel:

_____

Title: _____ Date Signed: _____

TOWNSHIP NAME: _____

**Complete below only if required by the county.**
On behalf of the township, I acknowledge that the organization is applying to conduct gambling activity within the township limits. (A township has no statutory authority to approve or deny an application, per Minnesota Statutes 349.213, Subd. 2.)

Print Township Name: _____

Signature of Township Officer: _____

Title: _____ Date Signed: _____

## ACKNOWLEDGMENT AND OATH

1. I hereby consent that local law enforcement officers, the Board or its agents, and the commissioners of revenue or public safety and their agents may enter and inspect the premises.
2. The Board and its agents, and the commissioners of revenue and public safety and their agents, are authorized to inspect the bank records of the gambling account whenever necessary to fulfill requirements of current gambling rules and law.
3. I have read this application and all information submitted to the Board is true, accurate, and complete.
4. All required information has been fully disclosed.
5. I am the chief executive officer of the organization.
6. I assume full responsibility for the fair and lawful operation of all activities to be conducted.
7. I will familiarize myself with the laws of Minnesota governing lawful gambling and rules of the Board and agree, if licensed, to abide by those laws and rules, including amendments to them.
8. Any changes in application information will be submitted to the Board no later than ten days after the change has taken effect.
9. I understand that failure to provide required information or providing false or misleading information may result in the denial or revocation of the license.
10. I understand the fee is non-refundable regardless of license approval/denial.

Keith R Hall
**Signature of Chief Executive Officer (designee may not sign)**

5/31/2025
Date

Data privacy notice: The information requested on this form (and any attachments) will be used by the Gambling Control Board (Board) to determine your organization's qualifications to be involved in lawful gambling activities in Minnesota. Your organization has the right to refuse to supply the information; however, if your organization refuses to supply this information, the Board may not be able to determine your organization's qualifications and, as a consequence, may refuse to issue a permit. If your organization supplies the information requested, the Board will be able to process your organization's application. Your organization's name and address will be public information when received by the Board. All other information provided will be private data about your organization until the Board issues the permit. When the Board issues the permit, all information provided will become public. If the Board does not issue a permit, all information provided remains private, with the exception of your organization's name and address which will remain public. Private data about your organization are available to: Board members, Board staff whose work requires access to the information; Minnesota's Department of Public Safety, Attorney General, Commissioners of Administration, Minnesota Management & Budget, and Revenue; Legislative Auditor, national and international gambling regulatory agencies; anyone pursuant to court order; other individuals and agencies specifically authorized by state or federal law to have access to the information; individuals and agencies for which law or legal order authorizes a new use or sharing of information after this notice was given; and anyone with your written consent.

This form will be made available in alternative format, i.e. large print, braille, upon request.

*An equal opportunity employer*

MINNESOTA LAWFUL GAMBLING

# LG215 Lease for Lawful Gambling Activity



## LEASE INFORMATION

| | | |
|---|---|---|
| Organization: American Legion Post 85 North Branch | License/Site Number: 00140 | Daytime Phone: 651-674-4810 |
| Address: 6439 Elm St. | City: North Branch | State: MN Zip: 55056 |
| Name of Leased Premises: Muddy Cow North Branch LLC | Street Address: 5896 Old Main St. | |
| City: North Branch | State: MN Zip: 55056 | Daytime Phone: 651-243-5445 |
| Name of Legal Owner: Patrick Conroy | Business/Street Address: 12354 Hilo Ct. N. | |
| City: Hugo | State: MN Zip: 55038 | Daytime Phone: 612-594-0305 |
| Name of Lessor **(if same as legal owner, write "SAME")**: SAME | Address: | |
| City: | State: Zip: | Daytime Phone: |

Check applicable item:

- [x] **New or amended lease.** Effective date: 7/1/2025. Submit changes at least ten days **before** the effective date of the change.
- [ ] **New owher.** Effective date: _____. Submit new lease **within** ten days after new lessor assumes ownership.

## CHECK ALL ACTIVITY THAT WILL BE CONDUCTED (no lease required for raffles)

- [x] Pull-Tabs (paper)
- [ ] Pull-Tabs (paper) with dispensing device
- [x] Bar Bingo
- [x] Bingo
- [x] Tipboards
- [x] Paddlewheel
- [ ] Paddlewheel with table
- [x] Electronic Pull-Tabs
- [x] Electronic Linked Bingo

Electronic games may only be conducted:

1. at a premises licensed for the on-sale of intoxicating liquor or the on-sale of 3.2% malt beverages; or
2. at a premises where bingo is conducted as the primary business and has a seating capacity of at least 100.

## PULL-TAB, TIPBOARD, AND PADDLEWHEEL RENT (separate rent for booth and bar ops)

**BOOTH OPERATION**: Some or all sales of gambling equipment are conducted by an employee/volunteer of a licensed organization at the leased premises.

**ALL GAMES, including electronic games**: Monthly rent to be paid: N/A%, not to exceed **10%** of gross profits for that month.

- Total rent paid from all organizations for only booth operations at the leased premises **may not exceed $1,750.**
- The rent cap does not include BAR OPERATION rent for electronic games conducted by the lessor.

**BAR OPERATION**: All sales of gambling equipment conducted by the lessor or lessor's employee.

**ELECTRONIC GAMES**: Monthly rent to be paid: 15 %, not to exceed **15%** of the gross profits for that month from electronic pull-tab games and electronic linked bingo games.

**ALL OTHER GAMES**: Monthly rent to be paid: 20 %, not to exceed **20%** of gross profits from all other forms of lawful gambling.

- If any booth sales conducted by a licensed organization at the premises, rent may not exceed **10%** of gross profits for that month and is subject to booth operation **$1,750** cap.

## BINGO RENT (for leased premises where bingo is the primary business conducted, such as bingo hall)

Bingo rent is limited to one of the following:

- Rent to be paid: N/A %, not to exceed **10%** of the monthly gross profit from all lawful gambling activities held during bingo occasions, excluding bar bingo.

  **- OR -**
- Rate to be paid: $ N/A per square foot, not to exceed 110% of a comparable cost per square foot for leased space, as approved by the director of the Gambling Control Board. The lessor must attach documentation, verified by the organization, to confirm the comparable rate and all applicable costs to be paid by the organization to the lessor.
  - ⇒ **Rent may not be paid for bar bingo.**
  - ⇒ Bar bingo does not include bingo games linked to other permitted premises.

## LEASE TERMINATION CLAUSE (must be completed)

The lease may be terminated by either party with a written 30 day notice. Other terms:

# LG215 Lease for Lawful Gambling Activity



**Lease Term**: The term of this agreement will be concurrent with the premises permit issued by the Gambling Control Board (Board).

**Management**: The owner of the premises or the lessor will not manage the conduct of lawful gambling at the premises. The organization may not conduct any activity on behalf of the lessor on the leased premises.

**Participation as Players Prohibited**: The lessor will not participate directly or indirectly as a player in any lawful gambling conducted on the premises. The lessor's immediate family and any agents or gambling employees of the lessor will not participate as players in the conduct of lawful gambling on the premises, except as authorized by Minnesota Statutes, Section 349.181.

**Illegal Gambling**: The lessor is aware of the prohibition against illegal gambling in Minnesota Statutes 609.75, and the penalties for illegal gambling violations in Minnesota Rules 7865.0220, Subpart 3. In addition, the Board may authorize the organization to withhold rent for a period of up to 90 days if the Board determines that illegal gambling occurred on the premises or that the lessor or its employees participated in the illegal gambling or knew of the gambling and did not take prompt action to stop the gambling. Continued tenancy of the organization is authorized without payment of rent during the time period determined by the Board for violations of this provision, as authorized by Minnesota Statutes, Section 349.18, Subd. 1(a).

To the best of the lessor's knowledge, the lessor affirms that any and all games or devices located on the premises are not being used, and are not capable of being used, in a manner that violates the prohibitions against illegal gambling in Minnesota Statutes, Section 609.75.

Notwithstanding Minnesota Rules 7865.0220, Subpart 3, an organization must continue making rent payments under the terms of this lease, if the organization or its agents are found to be solely responsible for any illegal gambling, conducted at this site, that is prohibited by Minnesota Rules 7861.0260, Subpart 1, item H, or Minnesota Statutes, Section 609.75, unless the organization's agents responsible for the illegal gambling activity are also agents or employees of the lessor.

The lessor must not modify or terminate the lease in whole or in part because the organization reported, to a state or local law enforcement authority or to the Board, the conduct of illegal gambling activity at this site in which the organization did not participate.

**Other Prohibitions**: The lessor will not impose restrictions on the organization with respect to providers (distributor or linked bingo game provider) of gambling-related equipment and services or in the use of net profits for lawful purposes.

The lessor, the lessor's immediate family, any person residing in the same residence as the lessor, and any agents or employees of the lessor will not require the organization to perform any action that would violate statute or rule. The lessor must not modify or terminate this lease in whole or in part due to the lessor's violation of this provision. If there is a dispute as to whether a violation occurred, the lease will remain in effect pending a final determination by the Compliance Review Group (CRG) of the Board. The lessor agrees to arbitration when a violation of this provision is alleged. The arbitrator shall be the CRG.

**Access to Permitted Premises**: Consent is given to the Board and its agents, the commissioners of revenue and public safety and their agents, and law enforcement personnel to enter and inspect the permitted premises at any reasonable time during the business hours of the lessor. The organization has access to the premises during any time reasonable and when necessary for the conduct of lawful gambling.

**Lessor Records**: The lessor must maintain a record of all money received from the organization, and make the record available to the Board and its agents, and the commissioners of revenue and public safety and their agents upon demand. The record must be maintained for 3-1/2 years.

**Rent All-Inclusive**: Amounts paid as rent by the organization to the lessor are all-inclusive. No other services or expenses provided or contracted by the lessor may be paid by the organization, including but not limited to:

- trash removal
- electricity, heat
- snow removal
- storage
- janitorial and cleaning services
- other utilities or services
- lawn services
- security, security monitoring
- cost of any communication network or service required to conduct electronic pull-tabs games or electronic bingo
- in the case of bar operations, cash shortages.

Any other expenditures made by an organization that is related to a leased premises must be approved by the director of the Board. Rent payments may not be made to an individual.

## ACKNOWLEDGMENT OF LEASE TERMS

I affirm that this lease is the total and only agreement between the lessor and the organization, and that all obligations and agreements are contained in or attached to this lease and are subject to the approval of the director of the Gambling Control Board.

**Other terms of the lease:**

N/A

| Signature of Lessor: | Date: | Signature of Organization Official (Lessee): | Date: |
|---|---|---|---|
| [signature] | 5-31-25 | [signature] | 5/31/2025 |
| Print Name and Title of Lessor: Patrick Conroy Operator | | Print Name and Title of Lessee: Keith R. Hals Chief Executive Officer | |

**Questions?** Contact the Licensing Section, Gambling Control Board, at 651-539-1900. This publication will be made available in alternative format (i.e. large print, braille) upon request. **Data privacy notice:** The information requested on this form and any attachments will become public information when received by the Board, and will be used to determine your compliance with Minnesota statutes and rules governing lawful gambling activities.

**Mail or fax lease to:**
Minnesota Gambling Control Board
1711 W. County Road B, Suite 300 South
Roseville, MN 55113
Fax: 651-639-4032

**City of North Branch**
**Staff Report**

**Prepared By: Tonya Kostuch, City Clerk**

**Presenter: Tonya Kostuch, City Clerk**

**Date: 06/03/2025**

**Board & Commission: City Council**

**Subject: Approval of 30 day Transient Merchant License Group Sale for Southwestern Advantage**

---

Southwestern Advantage has completed an application for a 30-day Transient Merchant License Group Sale.
Group members include the following:
Sandra Elisee Juhkam

Recommended Action:
Motion and second to approve the application for a 30-day Transient Merchant License Group Sale for Southwestern Advantage.

**Voting Requirements:**

**Voting Options** **Simple Majority**

# CITY OF NORTH BRANCH
# Application for Transient Merchant License
# Group Sale

## SECTION 1 - INFORMATION ON SPONSOR, PROMOTER OR ORGANIZER

APPLICANT'S FULL LEGAL NAME (LAST, FIRST, MIDDLE)
SANDRA ELISEE JUHKAM

APPLICANT'S ADDRESS (STREET ADDRESS, CITY, STATE, ZIP)
1039 greenhaven dr saint paul MN 55127

| APPLICANT'S PHONE NUMBER | APPLICANT'S DRIVER'S LICENSE NUMBER |
|---|---|
| +16128039757 | EV904043 |
| **APPLICANT'S DATE OF BIRTH** | **APPLICANT'S SOCIAL SECURITY NUMBER** |
| 01/06/2004 | 736864126 |

HAS APPLICANT EVER BEEN CONVICTED OF A VIOLATION OF ANY FEDERAL STATE OR CITY ORDINANCES OR LAWS?
NO
IF SO LIST NATURE OF VIOLATION, DATE OF CONVICTION, AND NAME OF JURISDICTION INVOLVED.

## SECTION 2 - INFORMATION ON COMPANY

COMPANY NAME (PERSON, FIRM, ASSOCIATION OR CORPORATION WHOSE MERCHANDISE IS BEING SOLD)
Southwestern Advantage

COMPANY ADDRESS (STREET ADDRESS, CITY, STATE, ZIP) A PO BOX NUMBER IS NOT AN ACCEPTABLE ADDRESS
2451 Atrium Way #1868, Nashville, TN 37214

| COMPANY PHONE NUMBER<br>+1 (888) 551-5901 | MINNESOTA ID NUMBER | FEDERAL ID NUMBER |
|---|---|---|

## SECTION 3 - INFORMATION ON GOODS TO BE OFFERED

DESCRIPTION OF GOODS, WARES, MERCHANDISE, OR SERVICES BEING OFFERED BY TRANSIENT MERCHANTS
Educational resources: books, apps, websites.

| DATES GOODS ARE BEING OFFERED<br>04.06.2025-22.06.2025 | AREA WHERE GOODS ARE BEING OFFERED<br>North Branch City |
|---|---|

## SECTION 4 - INFORMATION ON TRANSIENT MERCHANTS

NAME AND ADDRESS OF ALL TRANSIENT MERCHANTS PARTICIPATING IN GROUP SALE. ATTACH A SEPARATE SHEET IF MORE SPACE IS NEEDED ****NOTE BACKGROUND CONSENT FORM MUST BE COMPLETED BY EACH TRANSIENT MERCHANT.***

*F:\NB STAFF\BRIDGITTE S\WP\LICENSES\APPLICATION FORMS\TRANSIENT MERCHANT- GROUP SALE 2015.DOC*

I certify that the information given herein is true and complete to the best of my knowledge. I authorize the City of North Branch to do a criminal background investigation as may be necessary in issuance of a Transient Merchant License.

_____ _____

SIGNATURE OF APPLICANT DATE

## FOR OFFICE USE ONLY

BACKGROUND CHECK COMPLETED BY _____

DATE OF INVESTIGATION_____

RECOMMEND ■ APPROVAL OR ■ DENIAL

■ APPROVED OR ■ DENIED BY CITY COUNCIL

DATE OF COUNCIL ACTION _____

FLAHERTY | HOOD P.A.

# MEMORANDUM

To: The Honorable Kevin Schieber
City of North Branch City Council

**VIA EMAIL ONLY**

cc: Matthew Hill, City Administrator

From: Christopher M. Hood

Date: June 4, 2025

Re: Legal Staff Report for June 10, 2025 City Council Meeting

- - - - - - - - - - - - - - - - - - - - - - - - - - - - - - - - - - - -

We are submitting this memorandum to update the City of North Branch City Council on the work we performed as City Attorney during May 2025. The matters listed below are discussed in a general manner only for sake of brevity and to maintain any attorney-client privileged and/or confidential information/data.

**Summary of City Matters**

1. Personnel and Labor Matters
   Attorneys researched, reviewed, analyzed, and drafted documents and correspondence and attended Council meetings for the City Administrator's performance evaluation. Attorneys advised and responded to various other questions and prepared correspondence regarding labor and employment matters.

2. Municipal Matters
   Attorneys researched, reviewed, analyzed, and advised on questions related surplus equipment.

3. Land Use and Real Estate Matters
   Attorneys researched, reviewed, advised and drafted documents related to a real estate transaction closing. Attorneys researched, reviewed, advised on questions related to platting and zoning issues. Attorneys researched, reviewed, advised on questions related to the liquor store lease.

4. Staff Communications
   Attorneys also make occasional day-to-day communications with the City Administrator, City Engineer and City staff regarding the above-referenced matters, among others.

CMH/sc

**City of North Branch**
**Staff Report**

**Prepared By: Nathan Sondrol, Community Development Director**

**Presenter: Nathan Sondrol, Community Development Director**

**Date: 06/05/2025**

**Board & Commission: City Council**

**Subject: Approval of Resolution R-196-2025 approving the Preserve at Spring Hill 2nd Addition Development Agreement**

---

## Overview / Background

Windward Development LLC (Developer) received previous City Council approvals for the Final Plat for Preserve at Spring Hill 2nd Addition (Development) on May 27, 2025.

One of the conditions of the Final Plat approval is contingent on the City and developer entering into a development agreement for the Preserve at Spring Hill 2nd Addition. The development agreement is attached.

## Staff Recommendation

City staff recommend approval of the agreement.

**Requested Action**
Motion to approve Resolution R-196-2025 approving the Preserve at Spring Hill 2nd Addition Development Agreement

**Voting Requirements:**

**Voting Options** **Simple Majority**

**STATE OF MINNESOTA**

**COUNTY OF CHISAGO**

**CITY OF NORTH BRANCH**

**CITY COUNCIL RESOLUTION NO. R-196-2025**

**A RESOLUTION APPROVING THE DEVELOPMENT AGREEMENT BETWEEN THE CITY OF NORTH BRANCH AND WINDWARD DEVELOPMENT LLC, FOR THE PRESERVE AT SPRING HILL 2ND ADDITION**

WHEREAS, Windward Development, LLC, received Final Plat approval on May 27, 2025 for Preserve at Spring Hill 2nd Addition, and the approval of the final plat is contingent on the City and developer entering into a development agreement, temporary turnaround agreements and a wetland management agreement; and,

WHEREAS, the City Council has reviewed the terms and conditions of a proposed agreements that details the obligations of the developer with regard to the development and construction of the planned public improvements.

NOW THEREFORE, BE IT RESOLVED BY THE CITY OF NORTH BRANCH CITY COUNCIL:

That the City Council approves the Planned Unit Development and Subdivision Agreement with Windward Development LLC in substantially the form attached hereto as Exhibit A.

That, provided further, the City Council authorizes staff to make non-substantive changes, if necessary, without further City Council approval.

Ex. A – Preserve at Spring Hill 2nd Addition Development Agreement

**DEVELOPMENT AGREEMENT**

**PRESERVE AT SPRING HILL 2ND ADDITION**

**THIS AGREEMENT** (the "Agreement") is entered into on this the ___ day of _____, 2025 by and between Windward Development, LLC a limited liability corporation under the laws of the State of Minnesota, with its principal office located at 38490 Jewel Ave, North Branch, Minnesota (the "Developer"), and the City of North Branch, a Minnesota municipal corporation, located at 6408 Elm Street, North Branch, Minnesota 55056 ("City"); (collectively the "parties").

**RECITALS**

A. Developer is the fee owner of real property located in the City of North Branch, Minnesota, identified with the Parcel Identification (PID) No. 11.00326.05, as legally described on the attached Exhibit A (the "Subject Property"), and which Subject Property shall be referred to hereafter as Preserve at Spring Hill 2nd Addition (the "Development").

B. This Agreement applies to the Development, which consists of 58 gross acres, according to the recorded plat thereof and as legally described in Exhibit A.

C. The proposed Development of the Subject Property shall consist of 35 residential lots and associated pubic improvements, including but not limited to: street improvements, stormwater management facilities, trails, grading and erosion control facilities as required for the proposed Development pursuant to the Approved Plans, as attached hereto and incorporated herein by reference as set forth in Exhibit C, and pursuant to the terms and conditions contained this Agreement and the City of North Branch City Code (the "City Code"), as applicable.

D. The Preliminary Plat for the Development was approved by the City Council on October 8, 2024, pursuant to Resolution No. R-98-2024, and the Final Plat was approved by the City Council on May 27, 2025 pursuant to Resolution No. R-189-2025 collectively referred to hereafter as "City Approvals."

E. The terms and conditions of the City Approvals are incorporated into this Agreement by reference. The proposed Development of the Subject Property shall be in conformance with the City Code, City Approvals, and this Agreement. Developer agrees to comply with the requirements as set forth by this Agreement and City Approvals, and shall be obligated to complete all development-related improvements, as further described and secured herein below.

F. The City and the Developer now desire to enter into this Agreement setting forth certain requirements and obligations relating to the Development of the Subject Property, including but not limited to, the execution and recording of certain instruments. This Agreement shall replace and supersede all previous oral agreements and understandings, previous development and early start agreements and related amendments thereto, and previous negotiations between the parties in relation to the Subject Property.

G. The City requires the Developer perform work and install certain on and off-site improvements within the Subject Property, as stated in the Approved Plans and this Agreement, as described in Section 1.01, and which work and improvements typically consist of the following: streets; street lighting; trails; public utilities, including but not limited to storm water management facilities; grading and erosion control. Said improvements to the Subject Property shall be referred to herein as the "Improvements."

## AGREEMENT

**NOW. THEREFORE**, in consideration of each party's promises as set forth in this Agreement, each party does mutually agree as follows:

## ARTICLE ONE
## CONSTRUCTION OF IMPROVEMENTS; EASEMENTS AND RIGHTS OF ENTRY

1.01 Right to Proceed. Unless separate written approval has been given by the City for the Development, the Developer may not grade or otherwise disturb the earth, remove trees or structures, construct public or private utilities, streets, buildings and/or any other public or private improvements until all of the following conditions have been satisfied:

a. This Agreement has been fully executed by the City and Developer and recorded with Chisago County;
b. The Plat has been recorded with Chisago County;
c. The City has received the required Escrow and Security for the Development and Improvements as provided in Exhibit B, which is attached hereto and incorporated herein by reference;
d. The site plan and construction plans for the Development on the Subject Property have been reviewed for compliance with City standards and are approved by the City Engineer;
e. A certificate of liability and property damage has been provided to the City; and
f. The City Engineer has issued a letter that all conditions have been satisfied and that the Developer

may proceed.

g. If required, Developer has provided all documents as required for the Development and/or as stated herein, including but not limited to: general warranty deed for park land dedication, easement agreements, declarations of restrictive covenants, etc.

1.02 Developer Responsibility. Before commencing construction of the Improvements, the Developer shall submit all required plans and specifications to the City for review and approval, with such approval being provided in writing to the Developer. Developer agrees to construct and fully pay for the Improvements required for Development of the Subject Property, as described in plans and specifications approved by of the City Engineer (the "Approved Plans"). For the purpose of this Agreement, the Approved Plans shall include: Grading, Erosion Control, Storm Water/SWPPP, and Street and Utility dated July 28, 2020, with a final revision date of May 6, 2025, and approved by the City Engineer on May 20, 2025, all as attached hereto and incorporated herein by reference as Exhibit C. The Improvements shall be constructed in accordance with City specifications, including all relevant City Code regulations, the zoning ordinance, subdivisions regulations, utility and street construction standards, this Agreement, and the Approved Plans.

a. Prior to beginning construction, the Developer or the Developer's engineer shall submit a copy of the Approved Plans to the City Engineer and shall schedule a preconstruction meeting with all concerned parties, including City staff and engineers to review the program for construction work. The foregoing plans and specifications shall be prepared by a competent registered professional engineer engaged by the Developer and shall be subject to the City's review and approval. No work shall commence on the Development of the Subject Property or the required Improvements until the Developer obtains a building permit(s) for the Development and the Improvements and pays all costs and fees required in connection with the procurement of the building permit(s) or such other permits as are required by City Code.

b. All labor and work will be in strict conformance with the Approved Plans, must comply with the policies, rules, regulations, standards, and ordinances of the City, and performed in the best and most worker-like manner. Any deviation from the Approved Plans must be pre-approved in writing by the City Engineer, which shall not be unreasonably withheld, conditioned or delayed.

c. Developer shall be solely responsible for all costs of constructing the required Improvements, and all costs incurred by it and City in conjunction with this Agreement, which costs are estimated and listed for the required Security in the attached Exhibit B. The costs of constructing the Improvements shall include the actual construction costs, the actual engineering, administration and any legal costs related thereto, and all other costs and fees relating to the construction of the Improvements and the Development as required by City Code, including but not limited to sanitary sewer availability charges, water availability charges, instillation of street and traffic control signs, etc. The engineering, administration and legal costs shall include the actual outside construction engineering assistance costs and the legal costs.

1.03 Staking, Surveying and Inspections. Developer must provide all required staking and

surveying for the Improvements in order to ensure that the completed Improvements conform to the Approved Plans. The City will provide for construction inspection and material testing for the Improvements. Developer must notify the City Engineer at least 48 hours in advance, not including weekend days or holidays, for inspection service or scheduling of tests to be performed. Costs incurred by the City for the inspection activities will be recovered through the escrow described in Article Two.

1.04 Unsatisfactory Labor or Material. The City Engineer shall not reject as defective and/or unsuitable any material or labor delivered consistent with the Approved Plans. In the event that the City Engineer reasonably rejects as defective or unsuitable any material, then such material must be removed and replaced with approved material at the sole cost and expense of the Developer. In the event that the City Engineer reasonably rejects as defective or unsuitable any labor supplied by the Developer, then the labor must be completed again to the specifications and with the approval of the City Engineer at the sole cost and expense of the Developer.

1.05 Records and Data. Upon request by the City Engineer, Developer will provide requested copies of bids, change orders, suppliers, subcontractors, or related matters, relating to the Improvements and to the work to be performed by the Developer. The parties acknowledge that this Agreement and related documents are subject to the Requirements of the Minnesota Government Data Practices Act, Minnesota Statutes, Chapter 13.

1.06 Final Inspection/Acceptance. Upon completion of the Improvements and all work required following inspections by the City Engineer, the City Engineer and representatives of the Developer's contractor and/or engineer will promptly make a final inspection of the Improvements to determine that the Improvements were installed pursuant to the Approved Plans. The Developer, its contractors and subcontractors, shall follow all instructions received from the City's inspectors and City Engineer, to the extent applicable, to comply with the Approved Plans, or applicable City Code or statutes for which the City inspectors have jurisdiction. The Developer's engineer shall provide for on-site project management. The Developer's engineer is responsible for design changes and contract administration between the Developer and the Developer's contractor(s). Before final payment is made to the contractor by the Developer, the City Engineer shall be satisfied that all work is satisfactorily completed in accordance with the Approved Plans, and the Developer's engineer shall submit a written statement attesting to the same. Final approval and acceptance of the development and Improvements shall be in writing from the City (the "Final Approvals"). The City will not unreasonably delay action on such resolution. The written approval and acceptance will also accept any Improvements, which are to be transferred to the City upon proper completion.

1.07 As-built Plans. Upon completion of the Improvements, the Developer shall provide the City with: (i) a full set of as-built plans in a digital PDF format, and (ii) an as-built survey in a CADD format, for City records.

1.08 Warranty/Maintenance Bond. The Developer warrants all Improvements required to be constructed by it pursuant to this Agreement against poor material and faulty workmanship. The Developer and/or its contractor shall be required to furnish the City a one (1) year warranty guaranteeing all Improvements that are transferred to the City. The maintenance bond shall be

provided to the City upon final inspection and acceptance of said Improvements. The Developer shall post a security in the form of either a) a warranty/maintenance bond for 100% of the cost of the Improvements, or b) a letter of credit or cash escrow for 25% of the amount of the original cost of the Improvements as warranty for the Improvements. The retainage from the Security identified in this Agreement may also be used to pay for warranty work.

1.01 Landscaping Maintenance Bond. The Developer warrants all Landscaping as required for this Development and is required to furnish to the City security, guaranteeing the landscaping work in the amount of the landscaping improvements associated with the Development. The Developer security for the Landscaping shall be for 25% of the amount of the original landscaping costs. Security for the Landscaping work may be included with the Offer of Dedication, with funds held as part of the retainage from the original Security identified in this Agreement, or may be provided as a separate letter of credit or cash deposit. Security for landscaping may only be released after one (1) full growing season and upon establishment of the all required landscaping items.
1.09

1.10 Maintenance of Public Property. Developer agrees to assume full financial responsibility for any damage which may occur to public property with the Development of Subject Property, including, but not limited to: streets, street sub-base, base, bituminous surface, curb, utility system including, but not limited to water main, sanitary sewer or storm sewer when said damage occurs as a result of the activity which takes place during the Development of the Subject Property by the Developer, its contractors or subcontractors, employees, or assigns. The Developer further agrees to pay all costs required to repair the streets or utility systems, or both, damaged or cluttered with debris when occurring as a direct or indirect result of the construction that takes place by said Developer, its contractors or subcontractors, employees, or assigns. In the event the Developer fails to timely maintain or repair the damaged public property referred to aforesaid, after first receiving 72 hours written notice of the nature of the default or damage, the City may undertake making or causing it to be repaired or maintained. The City may in such event(s) draw down on the security, escrow, Letter of Credit, or any other cash deposits or security made by Developer to pay such costs, if the Developer fails to timely complete the repairs or does not complete the repairs to the City's satisfaction.

1.11 Maintenance of Improvements. Developer shall be responsible for all maintenance, upkeep and repair, at Developer's expense, including, but not limited to snow plowing, mowing, weed control, and grading of the Improvements until such Improvements are completed and accepted by the City, and issuance of the Final Approvals by the City. Developer, at Developer's expense, shall remain responsible for all maintenance and upkeep of Improvements that are not transferred to the City. Developer hereby agrees to indemnify and hold the City harmless from any and all claims for damages of any nature whatsoever arising out of Developer's acts or omissions in performing the obligations imposed upon Developer by this paragraph.

1.12 Demolition. If required of the Development, the Developer shall obtain all required permits and approvals and thereafter remove any existing structures on the Subject Property identified for removal/demolition prior to commencement of the Improvements.

1.13 License to Developer. The City hereby grants to the Developer a temporary license (the

"License") over, under and across the rights-of-way dedicated to the public in the Preserve at Spring Hill 2nd Addition Final Plat for purpose of construction of the Improvements. The License will commence with the filing of the Preserve at Spring Hill 2nd Addition Final Plat with Chisago County, and shall terminate upon acceptance of the Improvements and issuance of Final Approvals.

1.14 Access License to the City. The Developer grants to the City, its agents, representatives, employees, officers, and contractors, a right of entry to access all areas of the Subject Property to perform any and all work and inspections necessary or deemed appropriate by the City or to take any corrective actions deemed necessary by the City in conjunction with this Agreement. The right of entry conveyed by the Developer to the City shall continue until the City accepts the Improvements and issues the Final Approvals. The City will provide the Developer with reasonable notice prior to exercising its rights hereunder, except in the case of an emergency. The City shall following expiration of the license have the right to enter the Subject Property to perform inspections as authorized by City Code.

1.15 Time of Performance. Except as otherwise provided in this Agreement, the Developer shall install all on-site improvements including installation of paved streets, curb and gutter, boulevards, sidewalks and trails, street signs, traffic signs, yard top soil, and temporary seeding in all yards, grading control per lot, drainage swales, berming, street cleanup during project development, and erosion control, and other work required by this Agreement by June 10, 2027, with the exception of the final wear course of asphalt on streets. The final wear course on streets shall be installed between May 15th and October 1st the first summer after the base layer of asphalt has been in place one freeze thaw cycle. Any deficiencies in the base, asphalt, curb or other improvements in the judgment of the City Engineer must be repaired by the Developer at its own cost prior to final paving. The Developer may, however, request an extension of time from the City. If an extension is granted, it shall be conditioned upon updating the security posted by the Developer to reflect cost increases and the extended completion date. Final wear course placement outside of this time frame must have the written approval of the City Engineer.

1.16 Grading Plan. The Development Property shall be graded in accordance with the approved grading development and erosion control plan. The plan shall conform to the Approved Plans, City Code and applicable law. Within thirty (30) days after completion of the grading, the Developer shall provide the City with a certificate of survey/"record" grading plan certified by a registered land surveyor or engineer that all ponds, swales, and ditches have been constructed on public easements or land owned by the City. The certificate of survey/"record" plan shall include field verified elevations of the following: a) cross sections of ponds; b) location and elevations along all swales, wetlands, wetland mitigation areas if any, ditches, locations and dimensions of borrow areas/stockpiles; c) lot corner elevations and building/house pads, d) top and bottom of retaining walls, and e) all lots with house footings placed on fill have been monitored and constructed to meet or exceed FHA/HUD 79G specifications. The Developer shall furnish the City Engineer satisfactory proof of payment for the site grading work and shall submit a certificate of survey (as constructed survey) of the Development Property after site grading is complete. Final lot grades shall be shown on the as constructed survey. Final grading shall substantially comply with the approved grading plan.

## ARTICLE TWO
## DEVELOPMENT STANDARDS AND REQUIREMENTS

2.01 Development Phasing. The Developer plans to construct the Development in 2 phase(s). This Agreement shall remain in full effect for the phase of the Development of the Subject Property hereby approved. Subsequent phases shall require additional development agreements for each phase as determined by the City commensurate with final plat approval for each phase. If the plat provided is a phase of a multi-phased preliminary plat, the preliminary plat approval for all phases not final platted shall lapse and be void unless final platted into lots and blocks, not outlots, within five (5) years after preliminary plat approval.

2.02 Development Standards. The Approved Plans reflect the City Approvals of the proposed Development under the applicable City Code and planning requirements. Development standards, including, but not limited to, setbacks, lot dimensions, architecture guidelines when necessary, must be satisfied by the Developer and/or assigned to a qualified subcontractor, and must be completed in a satisfaction according to the applicable Zoning District or Planned Unit Development regulations of the City Code, as applicable. The Developer and/or assigned may build no more or less than the number of units as shown on the Approved Plans, unless the Approved Plans are amended following review and approval by the City.

2.03 Changes in Official Controls. For two (2) years from the date of this Agreement, no amendments to the City's Comprehensive Plan or official controls shall apply to or affect the use, development density, lot size, lot layout or dedications of the approved final plat and Approved Plans, unless required by state or federal law or agreed to in writing by the City and the Developer. Thereafter, notwithstanding anything in this Agreement to the contrary, to the full extent permitted by state law, the City may require that any future development of the Subject Property comply with any amendments to the City's Comprehensive Plan, official controls, platting or dedication requirements enacted after the date of this Agreement.

2.04 Public Sidewalks, Trails & Trail Connections. The Developer shall be responsible for constructing all public and private sidewalks and trails along new and existing public and private streets, as shown on the Approved Plans, and connecting those sidewalks and trails to the existing adjacent system of public trails and sidewalks where applicable. All constructed sidewalks and trails must comply with the requirements of the City Code.

2.05 Park/Public Land Dedication. To meet the Park / Public Land Dedication requirements, the Developer may be required and/or agree to provide a land dedication, cash payment in lieu of land dedication, and/or combination of both. If land dedication, the Developer shall provide to the City a general Warranty Deed, naming the City of North Branch as the owner of said property. The developer shall deed Outlot B, totaling 7.79 acres, and as depicted on the Final Plat of Preserve at Spring Hill 2nd Addition to the City by general Warranty Deed within 60 days of Final Approvals or commensurate with recording the plat, whichever occurs first. The dedication shall be made at no cost to the City and is made in satisfaction of the City's Planned Unit Development Open Space requirements. The signed Warranty Deed shall be accompanied by a mortgagee's consent in the event the Subject Property is encumbered by a mortgage. If cash payment in lieu of land dedication, the Developer shall pay a cash contribution in the amount as stated in Exhibit B; payment shall be

made in lieu of land dedication in satisfaction of the City's Park/Public Land Dedication requirements.

2.06 Development Signage. The Developer shall submit detailed sign plans to City staff for all signage proposed for the Development, including the development entrance monument signs prior to making application for a building permit.

2.07 Required Permits. The Developer shall obtain or require its contractors and subcontractors to obtain all necessary and required permits for the Development, including but not limited to the Minnesota Pollution Control Agency (MPCA), Minnesota Department of Health (MDOH), and all other agencies and governmental authorities with jurisdiction over the Development and the Improvements before proceeding with construction of the Development and the Improvements. Copies of these permits shall be provided to the City Engineer, and may include but are not limited to the following: Minnesota Department of Health for Watermains, MN/DOT for State Highway Access, County Road Access and Work in County Road Right-of-Way, NPDES Permit for Stormwater Management, MPCA for Sanitary Sewer Extensions/Connections and Hazardous Material Removal and Disposal, Wetlands permits as applicable, DNR for Dewatering, and City of North Branch Building Permits, as applicable.

2.08 Covenants and Recording of Agreement. Before the commencement of construction of the Private Infrastructure Improvements, and as a condition to the City's issuance of a building permit or notice to proceed with respect to such construction, Developer shall have provided the City and its attorney with copies of any proposed Restrictive Covenants and any proposed articles and/or bylaws of the homeowner's association (the "Association") to be created by the Developer and binding upon the owners of lots within the Subdivision (the "Association Documents") and related documents relating to the use of the Development Property or portions thereof and Developer shall have received approval of all such Association Documents from the City. Without limiting any other provisions of this Agreement, the Restrictive Covenants shall include and describe the obligations of the owners of parcels of the Development Property and/or a duly formed association of such owners regarding continued compliance with this Agreement, the ownership of any commonly owned property, the repair and/or maintenance of such commonly owned or maintained property including permanent or monument signage, the obligations to repair and/or maintain the sewer and water infrastructure serving each residential unit, certain snow removal obligations and the indemnification of the City from claims for damages or personal injury resulting from the variations in lot size, setbacks and other City requirements as allowed by this Agreement. The Association Documents in the form approved by the City shall be in recordable form as a separate document and shall also be identified in Exhibit F to this Agreement. The Restrictive Covenants shall run with the lots in the Subdivision, and bind successors and assigns of all or any part thereof. Developer is responsible, in addition to the notice provided by recording this Agreement, to notify potential buyers of any of the foregoing lots in writing of the foregoing matters and to provide the City with written evidence that such notice was provided to such buyers.

## ARTICLE THREE
## FINANCIAL GUARANTY AND REQUIRED PAYMENTS

3.01 Development Fees. All fees as further set out in Exhibit B must be paid in full to the City prior to the City execution and delivery of the Final Plat to Developer for recording.

3.02 Financial Guaranty, Improvements. Prior to commencement of construction of the Improvements, the Developer will furnish the City an irrevocable Letter of Credit, cash escrow agreement, or combination thereof (the "Security"), approved by the City and in the form attached hereto as Exhibit F and Exhibit G, as applicable, from a bank, in the amount of 125% of the estimated project costs for the Improvements as set forth in Exhibit B. If by Letter of Credit, the Security must contain a provision that prohibits the issuer or surety from terminating the Security without first giving 30 days' written notice to the City of the proposed termination or expiration of the Security. Failure of the Developer to post a substitute Security within five (5) days after notice by the City shall constitute a default that shall be grounds for drawing on the letter of credit. The City Administrator may grant a reduction in the Security upon written request by the Developer based upon the value of the completed work at the time of the requested reduction. The Security may not be reduced to less than 10% of the original amount until all work required of the Developer by this Agreement has been completed and accepted by the City. The Security shall be released upon the City's issuance of the Final Approvals. Upon failure of the Developer to complete the Improvements in accordance with this Agreement or otherwise perform under this Agreement, the City may, after providing five (5) days written notice to the Developer, declare the Developer to be in default and the amount of the Security shall be paid over to the City. From the proceeds of the Security, the City shall be reimbursed for any attorneys' fees, engineering fees or other technical or professional assistance, including the work of the City staff and employees, and the remainder thereof shall be used by the City to complete the Improvements. The Developer shall be liable to the City to the extent that the Security is inadequate to reimburse the City its costs and pay for the completion of the work.

3.03 Escrow. In addition to the required Security, the Developer shall also submit a cash escrow ("Escrow") to the City in an amount as required by Exhibit B. This Escrow is to be used by the City staff to charge costs of services or materials incurred by the City in connection activities required under this Agreement as set forth on the attached Exhibit B, including but not limited to engineering fees, administration, construction observation, consultant fees, and attorney's fees. The City will bill costs incurred related to the Development against and reimburse itself from the deposited escrow no more often than monthly. The City shall provide notice of the funds drawn down from the deposited escrow to Developer containing the itemized costs incurred by the City. The City will provide written notice to the Developer if the Escrow is insufficient to cover ongoing and projected City expenses associated with the Development. Developer shall pay additional escrow as determined by the City within ten (10) days of written notice. Failure to make payment of the additional escrow amount will permit the City to supplement those amounts from the Security, pursuant to this Article or to issue the Developer a stop work order. The City shall return any unused Escrow balance to the Developer no sooner than six (6) months after the acceptance of the Improvements and issuance of the Final Approvals by the City. If the City requires an escrow agreement for this purpose, Developer shall enter into and execute such an escrow agreement with the City in the form required by the City. The Developer shall deposit the full escrow with the City prior to the final plat being recorded or building permit issuance. No construction of Improvements will be authorized until the Escrow has been paid to the City.

## ARTICLE FOUR
## OTHER REQUIREMENTS

4.01 Indemnification. Notwithstanding anything to the contrary in this Agreement, the City, its officials, agents and employees shall not be personally liable or responsible in any manner to the Developer, the Developer's contractor or subcontractor, material suppliers, laborers or to any other person or persons for any claim, demand, damages, actions or causes of action of any kind or character arising out of or by reason of the execution of this Agreement or the performance and completion of the work required by this Agreement to be performed by the Developer. The Developer will hold the City, its officials, agents and employees harmless from all such claims, demands, damages, or causes of action and the costs, disbursements, and expenses of defending the same, including but not limited to, attorneys' fees, consulting engineering services, and other technical or professional assistance arising from or related to this Agreement, Developer's performance or non-performance under this Agreement, or the completion of or failure to complete the work required by this Agreement, including the work of City staff and employees. The Developer further agrees that it will indemnify, defend, and hold harmless the City and its governing body members, officers, and employees, from any claims or actions arising out of the presence, if any, of hazardous wastes or pollutants on the Subject Property and/or Development. Nothing in this section will be construed to limit or affect any limitations on liability of the City under State or federal law, including without limitation Minnesota Statutes, Sections § 466.04 and § 604.02. All indemnification obligations shall survive termination, expiration or cancellation of this Agreement.

4.02 Insurance. Developer shall take out and maintain or cause to be taken out and maintained until six (6) months after the Final Approvals and the City has accepted the Improvements, liability and property damage insurance covering bodily injury, including death, and claims for property damage which may arise out of Developer's work or the work of its subcontractors or by one directly or indirectly employed by any of them. The Developer must keep the insurance in force at all times that construction on the Development is in progress. The insurance must name the City as an additional insured. The Developer shall furnish proof of insurance acceptable to the City, covering any public liability or property damage by reason of the operation of the Developer's equipment, laborers, and hazard caused by the Improvements, and include at least the following:

a. Commercial general liability insurance, including operations, contingent liability, operations of subcontractors, competed operations and contractual liability insurance, together with an Owner's Contractor's Policy with limits against bodily injury, including death, and property damage to include, but not be limited to damages caused by erosion or flooding, which may arise out of Developer's work or the work of any of its subcontractors. The exclusion for underground collapse shall be removed.

b. Limits for bodily injury or death shall not be less than $500,000.00 for one person and $1,500,000.00 for each occurrence; limits for property damage shall not be less than $2,000,000.00 for each occurrence.

c. Worker's compensation insurance, with statutory coverage, if applicable.

d. Developer shall file a Certificate of Insurance with the City Clerk prior to commencing site grading. Developer shall be responsible for insuring that the Certificate bear the following wording:

"Should any of the above policies be canceled or terminated before the expiration date thereof, the issuing company shall give thirty (30) days written notice of cancellation or termination to the Certificate Holder."

4.03 Building Permits and Occupancy. Except as otherwise provided for in this Agreement, building permits shall only be issued upon execution of this Agreement by the City and Developer and all amounts due and the Security and Escrow required under this Agreement are timely paid to the City, and the Final Plat is recorded and a receipt of said recording is provided to the City Clerk. Prior to recording of the Final Plat, permits for grading and erosion control may be issued in conjunction with an approved Early Grading Agreement and grading permit, and payment of the required Security and Escrow by Developer to the City as identified in Exhibit B. The City's approval of the final plat or this Agreement does not include approval of building permits for any structures to be constructed within the Subject Property. The Developer must submit and the City approve building plans prior to the issuance of building permits for structures within the Subject Property

4.04 Model Home. If a residential development, the Developer may apply for building permit(s) to construct three (3) model single-family home prior to the completion of the public improvements serving the development. Model home sites must be approved by the Community Development Director and may be no greater 350 feet from a paved bituminous road. Developer shall maintain access for vehicle traffic and parking during construction of the model homes and access for emergency personnel and equipment, as determined by the City. No occupancy of any model home or newly constructed building shall occur until the base course of bituminous is in place and a Certificate of Occupancy has been issued by the City Building Official. The Developer shall use the model home only for real estate sales purposes and no other purposes. The Developer or Developer's owner's representative shall maintain reasonable access to any occupied building within said Development, including necessary street maintenance such as grading and graveling and snow removal prior to permanent street surfacing and acceptance of the streets by the City.

No additional model homes may be constructed or utilized until all necessary public improvements (those set forth in Section 1.15 except the second lift of bituminous) and utilities have been installed and the utilities have been successfully tested. Prior to this, model homes may only be used by Developer's staff or realtors for purposes of showing the models to potential buyers. No model home may be used until landscaping conforming to City Ordinance has been installed, or required escrow has been posted within the City.

4.05 Private Easements. Developer shall provide to the City evidence of all executed private easements between the Developer and adjacent property owner(s). Private easements shall be recorded with Chisago County; a copy of said recording shall be provided to the City Clerk with a copy of the private easement.

4.06 Underground Utilities. The Developer shall contact the electric, telephone, gas and cable

companies that are authorized to provide service to the Subject Property for the purpose of ascertaining whether any of those utility providers intend to install underground lines within the Development. The placement of private underground utilities shall be designed and constructed according to City Code, City standards and specifications, and coordinated with the placement of public underground utilities. Underground utility plans shall be reviewed and approved by the City Engineer. Any costs associated with the installation of underground utilities required by the utility companies shall be completed at the sole expense of the Developer. Private utilities shall not be installed until the curb and gutter are completed and backfilled, as applicable. All utilities shall be installed underground or as otherwise approved in writing by the City Engineer. The City Engineer must approve of the final location for all private utilities. Joint trenching of the utilities is strongly encouraged. All utilities must be located in public rights-of-way or within drainage and utility easements. The Developer agrees to comply with applicable requirements of franchise ordinances in effect in the City, copies of which are available from the City Clerk. If any conditions set forth in this Agreement conflict with the City's utility franchise agreements, the franchise agreements shall in all cases prevail.

4.07 Construction Management of Project Area. During construction of the Improvements and the Development, the Developer and its contractors and subcontractors shall minimize the impacts from construction on the surrounding public and private properties. Developer shall provide a map of the Construction Area, defining the limits of the project area and shall erect any construction fencing as necessary to demarcate the project area limits. All parking of the Developer and its contractors and subcontractors, and storage of construction materials, shall occur wholly within the project area, unless otherwise approved by the City. No fill, excavated material or construction materials shall be stored in any public rights-of-way

4.08 Construction Hours; Noise; Dust. Developer will comply with all requirements of the City pertaining to the hours and days during which construction activities may take place, unless otherwise approved by the City Administrator. The Developer shall provide dust control to the satisfaction of the City Engineer.

4.09 Street Cleaning. The Developer shall clean dirt and debris from streets that has resulted from construction work by the Developer, its contractors, subcontractors, agents or assigns. The City will inspect the Subject Property not less than on a weekly basis to determine whether it is necessary to take additional measures to clean dirt and debris from the streets. After 72-hours verbal notice to the Developer or Developer's owner's representative, the City may complete or contract to complete the clean-up at the Developer's expense. The City may draw down on the Escrow, Security and/or any other cash deposit to pay such costs.

4.10 Street Signs, Lighting, and Mailboxes. The Developer shall be financially responsible for the cost of street identification signs and street lighting for the Development. The City shall provide and install street identification signs, and has the sole discretion to determine the number and location of said signs and street lights. The street lighting plan shall be designed and constructed according to City standards and specifications. The Developer shall submit a final lighting plan for review and approval to the City Engineer prior to commencing construction. The Developer is required to supply and install cluster mailboxes as approved by the City and for which such placement must be approved by the USPS Postmaster.

4.11 Erosion Control. Prior to initiating site grading, the erosion control plan shall be implemented by the Developer and inspected and approved by the City Engineer. All weekly erosion inspections, per the requirement of the SWPPP, must be completed by a SWPPP certified inspector, and emailed to the Public Works Director weekly. The City will also perform weekly SWPPP Inspections as a requirement of the city's MS4 permit. The developer/owner will be emailed copies of said inspection. The city will provide thee (3) notices of non-conformance of weekly SWPPP inspections to developer/owner, if corrections are not made by the third notification, all SWPPP inspections going forward will be contracted to the City's Engineer and billed back to the developer/owner's escrow account. The Erosion Control Plan and Storm Water Pollution Prevention Plan (the "SWPPP") shall be implemented by the Developer and inspected and approved by the City Engineer. Erosion and sediment control practices must comply with the Minnesota Pollution Control Agency's (the "MPCA") Best Management Practices and applicable MPCA NPDES permit requirements for construction activities and the Developer's SWPPP. The Developer shall be responsible for compliance with the erosion control plan, pursuant to the Approved Plans. The Developer will be given a telephone notice when an unsatisfactory condition exists that is determined to be a Developer's responsibility. Work to correct said unsatisfactory condition shall commence within 72 hours from the time of the telephone notice to the Developer or Developer's owner's representative. If work is not commenced within 72 hours of said telephone notice, City will proceed to do the required work at the expense of the Developer. If it is determined that the unsatisfactory condition could result in degradation of downstream water quality, Developer shall, upon telephone notice, immediately proceed to correct said unsatisfactory condition. If Developer does not, within the stated time period, respond to said unsatisfactory condition, City has the right to enter upon the Subject Property and correct said condition. City shall be entitled to reimbursement of all of its costs and expenses including, but not limited to legal, fiscal and engineering, and may draw on Developer's Escrow and Security. No development, utility or street construction will be allowed and no building permits will be issued unless the final plat and Approved Plans for the Development, as applicable, are in full compliance with the approved erosion control plan.

4.12 Covenants and Agreement for Maintenance of Stormwater Facilities. In order to provide stormwater management and control to meet the City's stormwater permitting requirements, City Code and law and regulations of the State of Minnesota, as applicable, and to promote water quality and volume control to the City's stormwater systems and water bodies, the Developer and City agree that it is reasonable for the City to require the Developer and all subsequent owners of the Development and Subject Property to construct, inspect, operate, repair, maintain and replace, City required stormwater facilities, at the sole cost and expense of the Developer. The Developer and City shall enter into a Stormwater Maintenance Agreement that shall contain the terms and conditions, as required by the City, and covenants and declarations specific to the Development for the installation of and ongoing operation, repair, maintenance and replacement of such stormwater facilities at the sole cost and expense of the Developer and the Developer's successors and assigns.

4.13 Ownership of Improvements. Upon completion of the work and construction of the Improvements as required by this Agreement, and acceptance of Improvements by the City, the

Improvements lying within public easements and public rights-of-way shall become the property of the City of North Branch without further notice or action upon City acceptance thereof. Upon receipt of affidavits of completion by the Developer and Developer's owner's representative(s), the City Engineer shall accept the completed Improvements and the City shall issue a Certificate of Acceptance/Certificate of Completion.

4.14 Other Approvals. In addition to the City Approvals, other governmental agencies have reviewed and approved components of the Development plans, if required. It is the responsibility of the Developer to ensure that all permits from appropriate governmental agencies are received prior to beginning construction of any Improvements.

4.15 Final Plat. The Developer shall record the Final Plat for Preserve at Spring Hill 2nd Addition in the land records for Chisago County, Minnesota within 30 days of its release by the City to the Developer. Developer shall provide a copy of said recorded Final Plat to the City Clerk.

4.16 Further Subdivision. If the plat is a phase of a multi-phased preliminary plat, the City may refuse to approve final plats of subsequent phases if the Developer has breached this Agreement and the breach has not been remedied to the City's reasonable satisfaction. Development of subsequent phases may not proceed until Development Agreements for such phases are approved by the City and executed by the parties. Sanitary sewer and water area charges referred to in this Agreement are not being imposed on outlots, if any, in the plat that are designated in an approved preliminary plat for future subdivision into lots and blocks. Such charges will be calculated and imposed when the outlots are final platted into lots and blocks.

4.17 Wetland Mitigation. Wetland mitigation is the replacement, restoration, creation, or enhancement of wetlands caused by the unavoidable impacts to wetland areas as a result of development. If impacts are identified with this Development, the Developer shall submit and the City shall approve a Wetland Replacement Plan addressing these impacts. Before the City releases the Final Plat for recording, the Developer shall post security for wetland mitigation or provide proof of purchase of wetland credits, if approved and authorized by the Wetland Replacement Plan. Security may be in the form of a Letter of Credit or in the form of a cash deposit in a non-interest bearing cash escrow with the City. The security amount provided for wetland mitigation shall be for the amount as stated in Exhibit B, but shall be provided separate from the primary development security as is required by this Agreement. If the mitigation area is found to be unsuccessful after the mandatory five (5) year warranty period, the City may elect to keep the security to be used for this mitigation project or for wetland mitigation/restoration elsewhere within the City. In addition, the City may draw down the security at any time during the warranty period if the Developer fails to take corrective measures as directed by the City to perform the work recommended. If no wetland impact and resulting wetland mitigation is planned or required for the Development, the Developer shall remain responsible for any undisclosed mitigation on the land, and will be required to submit any necessary security should subsequent wetlands be identified.

4.18 Additional Work or Materials Costs. All Improvements that Developer is required to complete pursuant to this Agreement shall be designed and constructed according to City Code, City standards and specifications, and completed at no expense to the City, including, without limitation, any reimbursement by the City for work paid for by the Developer. The Developer

agrees that it will make no claim for compensation for work or materials so done or furnished.

4.19 Development Costs. Except as otherwise specified herein, the Developer shall pay all costs incurred by it and the City in conjunction with this Agreement, the approval of the Plat, the grading and development of the Subject Property, and the construction of the Improvements required by this Agreement, including but not limited to, all costs of persons and entities doing work or furnishing skills, tools, machinery, equipment and materials; insurance premiums; legal, planning and engineering fees; the preparation and recording of this Agreement and all easements and other documents relating to the Final Plat and the Subject Property, as applicable; all Response Action Plans, traffic studies, environmental assessments and/or engineering and other studies and reports; all permits and approvals; and all City's costs incurred pertaining to the inspection and monitoring of the work performed in connection with approval and acceptance of the final plat, the Development, the Approved Plans, the City Approvals, the Final Plans, and the construction of the Improvements and the other work done and improvements constructed on the Subject Property or otherwise related to the Development. The City shall not be obligated to pay Developer or any of its agents or contractors or subcontractors for any costs incurred in connection with the construction of the Improvements or the development of the Subject Property. Developer agrees to defend, indemnify, and hold the City and its mayor, council members, employees, agents and contractors harmless from any and all claims of whatever kind or nature and for all costs, damages or expenses which the City may pay or incur in consequence of such claims, including reasonable attorneys' fees, which may arise as a result of final plat approval, the Development, this Agreement, the construction of the Improvements (except for the negligence or intentional misconduct of the City with respect to the construction of the Improvements), the development of the Subject Property or the acts of Developer, and its employees, agents, contractors or subcontractors, in relationship thereto. The Developer hereby covenants and agrees that Developer will not permit or allow any mechanic's or materialman's liens to be placed on the City's interest in any property that is the subject of the Development or this Agreement during the term hereof. Notwithstanding the previous sentence, however, in the event any such lien shall be so placed on the City's interest, the Developer shall take all steps necessary to see that it is removed within thirty (30) business days of its being filed; provided, however, that the Developer may contest any such lien provided the Developer first posts a surety bond, in favor of and insuring the City, in an amount equal to 125% of the amount of any such lien.

4.20 Taxes, Assessments and Other Charges. The Developer shall pay, or cause to be paid when due, and in any event before any penalty is attached, all property taxes and special assessments for the Subject Property and any others referred to in this Agreement. This is a personal obligation of the Developer and shall continue in full force and effect even if the Developer sells one or more lots, the entire plat, or any part of the Subject Property. In addition to the charges and special assessments referred to herein, other charges and special assessments may be imposed such as but not limited to sewer availability charges ("SAC"), City water connection ("WAC") charges, City sewer connection charges, City storm water connection charges, building permit fees and plat review fees, which shall be paid by Developer.

4.21 PUD Ordinance Compliance. By executing this Agreement as to the Development, the City hereby acknowledges that the Developer as complied with the PUD Ordinance requirements of the City and this Agreement relating to the preliminary and final submissions and actions

to be taken by the Developer as of the date hereof and subject to such further submissions and actions as shall be reasonably required to update the Developers confirmed compliance with the PUD Ordinance and this Agreement to the extent that any plans referred to and incorporate into the Agreement are inconsistent with the requirements of the underlying zoning classification, pursuant to the PUD Ordinance, the City hereby consents to such inconsistency to the fullest extent allowed by the PUD Ordinance and/or the applicable zoning ordinance without limiting the generality of the foregoing, variances are hereby granted from the City's zoning ordinances as shown on the Preliminary and Final Plat, subject to the terms and conditions of approval as set forth on Exhibit E. Upon grant of this Variance, such lots are hereby deemed conforming lots under the City's zoning ordinance and shall be granted all rights and privileges as conforming lots.

## ARTICLE FIVE
## DEFAULT AND REMEDIES

5.01 Default by Developer. In the event of default by the Developer as to any of the work to be performed hereunder by the Developer, its successors or assigns, the City may, at its option, perform the work and the Developer shall promptly reimburse the City for any expense incurred by the City, provided the Developer is first given notice of the work in default, not less than 72 hours in advance, and does not, within that 72-hour period, diligently proceed to remedy such default to the City's reasonable satisfaction. The City is granted the right to declare any sums provided by this Agreement due and payable in full, and the City may immediately bring legal action against the Developer to collect the sums covered by this Agreement and/or draw upon the financial guaranty posted in conformance with Article Three of this Agreement. In the event the City draws from the financial guaranty sums that exceed the costs or damage to the City, the City will return such excess amounts. In addition to its other remedies provided herein, the City may levy the cost in whole or in part as a special assessment against the Subject Property. Developer waives its rights to notice of hearing and hearing on such assessments and its right to appeal such assessments pursuant to Minnesota Statutes, Section § 429.081. Notwithstanding any provision contained in this Article, the City may exercise any remedies which may be available to it at law or in equity in the event of a default by Developer under this Agreement.

5.02 Complete Improvements – Right of Entry. In addition to the City's other remedies under this Agreement, if the Developer's breach involves failure to complete the Improvements, the City is hereby authorized, at its option, to enter on to all portions of the Subject Property it deems necessary to complete the installation of any or all of the Improvements to which the default relates and draw upon the Security as provided in Article Three to reimburse itself for such costs incurred to remedy such default and invoice the Developer for any costs incurred in excess of the Security, with payment of such invoiced amounts required by the Developer within 30 days of the date of the City's invoice.

5.03 Denial of Permits. Breach of any term of this Agreement by the Developer and/or failure to comply with City Code shall be grounds for denial of any permits, including but not limited to:

grading permits, building permits, occupancy permits, etc., within the Development until such breach is corrected by the Developer to the City's reasonable satisfaction.

5.04 Rights Cumulative. No remedy conferred in this Agreement is intended to be exclusive and each shall be cumulative and shall be in addition to every other remedy. The election of any one or more remedies shall not constitute a waiver of any other remedy.

5.05 Attorney Fees. The Developer will pay the City's costs and expenses, including but not limited to engineering and attorneys' fees, in the event a suit or action is brought to enforce the terms of this Agreement or in the event an action is brought upon a bond or Letter of Credit or other Security furnished by the Developer as provided herein.

5.06 Termination. If Developer fails to: a) acquire fee simple title to all of the subject Property, and b) record this Agreement and the final plat in the office of the Chisago County Recorder, as applicable and as provided herein, within one (1) year after approval of the final plat or this Agreement, as applicable, by the City Council, this Agreement shall terminate and the approval of the final plat shall be null and void, subject to the following: i) All costs, fees and other amounts previously paid to the City in connection with the final plat, the Improvements, this Agreement and the Development shall belong to and be retained by the City; ii) the obligations of the Developer for costs incurred shall survive such termination and continue with respect to unpaid costs, fees and expenses incurred prior to such termination; iii) the indemnifications of Developer shall survive and continue after such termination; and iv) the parties shall be released from all other obligations and liabilities under this Agreement not specified above. In the event of the termination of this Agreement, the parties agree, if requested by the other party, to execute and deliver to the other party a written termination acknowledgment in a form reasonably satisfactory to both parties.

5.07 No City Obligation to Construct Improvement. The City shall have no obligation to construct the Improvements and Developer shall have no right to construct the Improvements or construct the Development on the Subject Property unless the Developer acquires fee simple title to the Development Property and records this Agreement and the final plat in the office of the Chisago County Recorder as required herein within one (1) year after approval of the final plat by the City Council.

## ARTICLE SIX
## MISCELLANEOUS PROVISIONS

6.01 Amendment. Any modification or amendment to this Agreement must be in writing and signed by both parties.

6.02 Assignment. The Developer may not transfer or assign any of its obligations under this Agreement without the prior written consent of the City, which consent shall not be unreasonably withheld, conditioned or delayed.

6.03 Agreement to Run with Land. The Developer agrees to record this Agreement among the land records of Chisago County, Minnesota contemporaneously with recording the Final Plat of

Preserve at Spring Hill 2nd Addition and corresponding Final Plat Resolution No. R-189-2025. The provisions of this Agreement shall run with the land and be binding upon the Developer and its successors in interest. Notwithstanding the foregoing, no conveyance of the Subject Property or any part thereof shall relieve the Developer of its personal liability for full performance of this Agreement unless the City expressly so releases the Developer in writing.

6.04 Release. Upon completion of the Improvements, the City's issuance of the Final Approval, and satisfaction of the Developer's obligations under this Agreement, which shall be evidenced by the expiration of the maintenance bond as required by Section 1.07 of this Agreement, the City agrees to execute a Certificate of Completion or other recordable instrument releasing the Development from the terms of this Agreement.

6.05 Severability. The provisions of this Agreement are severable, and in the event that any provision of this Agreement is found invalid, the remaining provisions shall remain in full force and effect.

6.06 Notices. All notices, certificates or other communications required to be given to City or Developer hereunder shall be sufficiently given: i) on the same day of personally delivered, ii) one (1) day after being deposited with a nationally recognized overnight courier service, or iii) two (2) business days after mailing by First Class or Certified or Registered mail, return receipt requested, with postage fully prepaid and addressed as follows:

**CITY**:

City of North Branch
6408 Elm Street
North Branch, MN 55374
Telephone: (651) 674-8113
Attn: Nathan Sondrol, Community Development Director

**DEVELOPER:**

Windward Development, LLC
38490 Jewel Ave
North Branch, MN 55056
Telephone: (651) 247-9588
Attn: Joshua Kopp, Managing Member

The City and Developer, by notice given hereunder, may designate different addresses to which subsequent notice, certificate or other communications should be sent.

6.07 No Third Party Beneficiary. This Agreement and any financial guarantees required pursuant to its terms are not intended for the benefit of any third party.

6.08 Applicable Law. This Agreement shall be governed by and construed in accordance with the laws of the State of Minnesota. The Developer agrees to comply with all laws, ordinances, and

regulations of Minnesota and the City that are applicable to the Subject Property.

6.09 Counterparts. This Agreement may be executed simultaneously in any number of counterparts, each of which shall be an original and shall constitute one and the same Agreement.

6.10 Non-waiver. Each right, power or remedy conferred upon the City or the Developer by this Agreement is cumulative and in addition to every other right, power or remedy, express or implied, now or hereafter arising, or available to the City or the Developer at law or in equity, or under any other agreement. Each and every right, power and remedy set forth in this Agreement or otherwise so existing may be exercised from time to time as often and in such order as may be deemed expedient by the City or the Developer and shall not be a waiver of the right to exercise at any time thereafter any other right, power or remedy. If either party waives in writing any default or nonperformance by the other party, such waiver shall be deemed to apply only to such event and shall not waive any other prior or subsequent default.

6.11 Supersedes and Replaces. The parties understand and agreed that this Agreement supersedes and replaces all oral agreements, previous development agreements, and negotiations between the parties in relation thereto.

6.12 Title Representation and Consents. The Developer represents, covenants and warrants with the City, its successors and assigns, that the Developer is well seized in fee title of the Subject Property and/or has obtained, as applicable, the required consents as listed and attached in Exhibit D, to this Agreement, in the form attached hereto, from all parties who have an interest in the Subject Property; that there are no unrecorded interests in the Subject Property; and that the Developer will indemnify and hold the City harmless for any breach of the foregoing covenants.

6.13 Compliance with Laws. The Developer agrees to comply with all local, state and federal laws, ordinances and regulations applicable to the Development of the Subject Property and Improvements.

6.14 Recitals and Exhibits. The recitals and exhibits hereto are made a part hereof and incorporated herein by reference.

6.15 City Code Adopted by Reference. The provisions of the City Code, Chapters 54, 58, and 66 are hereby adopted by reference in their entirety, unless specifically excepted, modified, or varied by the terms of this Agreement, or by the final plat as approved by the City, as applicable. In the event that a provision of this Agreement is inconsistent with or in conflict with the City Code, the City Code shall govern.

6.16 Expiration of Agreement. This Agreement shall remain in effect until such time as the Developer shall have fully performed all of its duties and obligations under this Agreement. Upon issuance of the Certificate of Completion by the City, this Agreement shall terminate.

*[Balance of this page intentionally left blank]*

**IN WITNESS WHEREOF**, the duly authorized representatives of the parties have caused this Agreement to be executed on the date and year first written above.

**CITY OF NORTH BRANCH**

By: _____
Kevin Schieber
Its Mayor

By: _____
Matthew Hill
Its City Administrator

STATE OF MINNESOTA )
) ss.
COUNTY OF CHISAGO )

The foregoing instrument was acknowledged before me this _____ day of _____, 20__ by Kevin Schieber and Matthew Hill, the Mayor and City Administrator, respectively, of the City of North Branch, a Minnesota municipal corporation, on behalf of the corporation and pursuant to the authority granted by its City Council.

_____
Notary Public

**DEVELOPER**
**WINDWARD DEVELOPMENT, LLC**

By _____
Joshua Kopp
Its Managing Member

STATE OF _____ )
) ss.
COUNTY OF _____ )

The foregoing instrument was acknowledged before me this _____ day of _____20___, by Joshua Kopp, the Managing Member, Windward Development, LLC, a limited liability company under the laws of the State of Minnesota on behalf of the limited liability company, and pursuant to the authority granted by its _____s members.

_____
Notary Public

THIS INSTRUMENT WAS DRAFTED BY:
City of North Branch
6408 Elm Street
North Branch MN 55056
(651) 674-8113

**EXHIBIT A**

**PRESERVE AT SPRING HILL 2ND ADDITION**
**SUBJECT PROPERTY & DEVELOPMENT AREA**
**LEGAL DESCRIPTION**

Current Legal Description

Outlot A, Preserve at Spring Hill, Chisago County, Minnesota.

PID(s): 11.00326.05

Proposed Legal Description

Lots 1 through 9, inclusive, Block 1; Lots 1 through 26, inclusive, Block 2; Lots 1 through 14, inclusive, Block 3; Lots 1 through 9, inclusive, Block 4; and Outlots A and B of Preserve at Spring Hill 2nd Addition, Chisago County, Minnesota.

**EXHIBIT B**

**PRESERVE AT SPRING HILL 2ND ADDITION**
**FINANCIAL SECURITY & ESCROW**

# 2025 EXHIBIT B

## PRESERVE AT SPRNIG HILL 2ND ADDITION

| DEVELOPMENT INFORMATION | | |
|---|---|---|
| Property - Acres | | *Acres for 2 Outlots* |
| Property - Square Feet | | *SF for 2 Outlots* |
| Units | 35.0 | *Used for SAC/WAC* |
| Lots | 35.0 | *Lots/Blocks + Outlots* |

| SECTION 1: DEVELOPMENT FEES | COST | PER | DUE | NOTES |
|---|---|---|---|---|
| Water Trunk | | Per Unit | - | |
| Sanitary Sewer Trunk | | Per Unit | - | |
| Storm Sewer Trunk | - | Per Acre | - | |
| Park Dedication | 1,800.00 | Per Unit | 63,000.00 | *Land Dedciation and Trail Construction* |
| Subdivision GIS Data Entry Fee | - | Per Acre | - | |
| Lot Origination Fee | - | Per Lot | - | |
| **Subtotal Platting Fees** | | | **63,000.00** | |
| | | | - | |
| **Total Platting Fees** | | | **63,000.00** | |

| SECTION 2: ADMINISTRATIVE AND DEVELOPMENT RELATED COSTS | DUE | NOTES |
|---|---|---|
| Administrative | - | *Construction Improvements (3%)* |
| [Development Related Costs] | - | |
| **Subtotal Administrative and Development Related Costs** | **-** | |
| [List Credits, if Applicable] | - | |
| [List Credits, if Applicable] | - | |
| **Total Administrative and Development Related Costs** | **-** | |

| SECTION 3: IMPROVEMENT COSTS | SECURITY | DUE | NOTES |
|---|---|---|---|
| **Development Escrow** | | | |
| Engineering - Onsite Field Inspection | - | 22,680.00 | *City Engineer - Contract* |
| Engineering - Project Management | - | 2,800.00 | *City Engineer - Contract* |
| Environmental | - | - | *Wetland Engineer - Contract* |
| Legal | - | - | *City Attorney - Contract* |
| Planning | - | - | *Planning Staff* |
| **Non-Public Improvements** | | | |
| Landscaping | - | - | |
| Construction - Site (Grading) | 247,012.15 | - | *Grading + Erosion Control+Removals* |
| Construction - Storm Ponding | - | - | |
| **Wetland Mitigation** | | | |
| Wetland Mitigation | - | - | |
| **Public Improvements Dedicated to the City** | | | |
| Landscaping | - | | |
| Construction - Streets | 500,808.65 | | *Streets+Mobilization (per Eng Est)* |
| Construction - Trail | 61,099.68 | | *Trail (per Eng Est)* |
| Construction - Utility Improvements (Storm Sewer) | 126,207.70 | | *Storm Sewer (per Eng Est)* |
| Construction - Utility Improvements (Water Main) | | | *Water (per Eng Est)* |
| Construction - Utility Improvements (Sanitary Sewer ) | | | *Sanitary Sewer (per Eng Est)* |
| **Subtotal Improvement Costs** | **935,128.18** | **25,480.00** | |
| [List Credits, if Applicable] | | | Grading Escrow |
| **Total Improvement Costs** | **935,128.18** | **25,480.00** | |

| SECTION 4: LOC / ESCROW / FEES REQUIRED | SECURITY | DUE | NOTES |
|---|---|---|---|
| **Cash & Escrow** | | | |
| Section 1: Platting Fees | - | 63,000.00 | *Cash* |
| Section 2: Administrative Fees | - | - | *Cash* |
| Section 2: Development Related Costs | - | - | *Development Related Items* |
| Section 3: Cash Escrow | - | 28,028.00 | *Cash (110%)* |
| **Security** | | | |
| Section 3: Letter of Credit - Improvements (125%) | 1,168,910.23 | - | *Public / Non-Public Improvements (125%)* |
| Section 3: Letter of Credit - Wetland Mitigation | - | - | *Public / Non-Public Improvements (125%)* |
| **Total Letter of Credit and Cash Required** | **1,168,910.23** | **91,028.00** | |

**EXHIBIT C**

**PRESERVE AT SPRING HILL 2ND ADDITION**
**APPROVED PLANS**

**EXHIBIT D**

**PRESERVE AT SPRING HILL 2ND ADDITION**
**CONSENT FORMS**

**MORTGAGEE CONSENT**

_____ ("Bank") holds a mortgage encumbering the Property.

The Property is subject to the foregoing Developer's Agreement and, accordingly, Bank hereby consents to the Developer's Agreement; provided, that in doing so, Bank shall not be liable to the City or any other person for the performance or non-performance of the Agreement by the Developer; provided further, that in the event that Bank acquires fee title to the Property by foreclosure or sale in lieu of foreclosure, Bank shall not be required to perform any of the obligations required of the Developer in said Agreement during the Bank's term of ownership so long as Bank is actively marketing the Property for sale and maintaining the Property in compliance with applicable ordinances.

_____

Dated:_____, 20__

By: _____

Its: _____

ACKNOWLEDGEMENT FOR BANK

STATE OF MINNESOTA )
)ss.
COUNTY OF _____)

The foregoing instrument was acknowledged before me this _____ day of _____, 20__, by _____, the _____ of _____, a _____ under the laws of _____, on behalf of the _____.

_____
Notary Public

**FEE OWNER CONSENT**
**TO**
**DEVELOPMENT AGREEMENT**

_____, fee owners of all or part of the subject Development Property, the development of which is governed by the foregoing Development Agreement, affirm and consent to the provisions thereof and agree to be bound by the provisions as the same may apply to that portion of the subject Development Property owned by them.

Dated this _____ day of _____, 20_____.

_____

_____

STATE OF MINNESOTA )
) ss.
COUNTY OF _____ )

The foregoing instrument was acknowledged before me this _____ day of _____, 2____, by _____.

_____
NOTARY PUBLIC

**CONTRACT PURCHASER CONSENT**
**TO**
**DEVELOPMENT AGREEMENT**

_____, fee owners of all or part of the subject Development Property, the development of which is governed by the foregoing Development Agreement, affirm and consent to the provisions thereof and agree to be bound by the provisions as the same may apply to that portion of the subject Development Property owned by them.

Dated this _____ day of _____, 20_____.

_____

_____

STATE OF MINNESOTA )
) ss.
COUNTY OF _____ )

The foregoing instrument was acknowledged before me this _____ day of _____, 2____, by _____.

_____
NOTARY PUBLIC

# EXHIBIT E

## THE PLANNED UNIT DEVELOPMENT AND SUBDIVISION AGREEMENT BETWEEN THE CITY OF NORTH BRANCH, A MINNESOTA MUNICIPAL CORPORATION AND WINDWARD DEVLOMPENT, LLC, A MINNESOTA LIMITED LIABILITY COMPANY

This is Exhibit E to that certain Planned Unit Development and Subdivision Agreement by and between the City of North Branch, a Minnesota municipal corporation and Windward Development, LLC, a Minnesota limited liability company. Capitalized terms used in this Exhibit shall have the meanings given them in the Planned Unit Development and Subdivision Agreement. Below are the terms and conditions of the preliminary plat and the planned unit development:

# EXHIBIT F

## THE PLANNED UNIT DEVELOPMENT AND SUBDIVISION AGREEMENT BETWEEN THE CITY OF NORTH BRANCH, A MINNESOTA MUNICIPAL CORPORATION AND WINDWARD DEVLOMPENT, LLC, A MINNESOTA LIMITED LIABILITY COMPANY

This is Exhibit E to that certain Planned Unit Development and Subdivision Agreement by and between the City of North Branch, a Minnesota municipal corporation and Windward Development, LLC, a Minnesota limited liability company. Capitalized terms used in this Schedule shall have the meanings given them in the Planned Unit Development and Subdivision Agreement. Attached to this coversheet from time to time will be the proposed Restrictive Covenants and Association Documents, if any.

**EXHIBIT G**

**TO**

**THE PLANNED UNIT DEVELOPMENT AND SUBDIVISION AGREEMENT BETWEEN THE CITY OF NORTH BRANCH, A MINNESOTA MUNICIPAL CORPORATION AND WINDWARD DEVELOPMENT, LLC, A MINNESOTA LIMITED LIABILITY COMPANY**

This is Exhibit G to that certain Planned Unit Development and Subdivision Agreement by and between the City of North Branch, a Minnesota municipal corporation and WINDWARD DEVELOPMENT, LLC, a Minnesota limited liability company. Capitalized terms used in this Exhibit shall have the meanings given them in the Planned Unit Development and Subdivision Agreement. Attached to this cover sheet is the Offer of Dedication.

**PRESERVE AT SPRING HILL 2ND ADDITION**

**OFFER OF DEDICATION**

THE UNDERSIGNED, WINDWARD DEVELOMPENT, LLC a Minnesota limited liability company ("Developer") has executed this Offer of Dedication ("Offer") effective as of the ____ day of _____, 2025.

**RECITALS**

A. The Developer and the City of North Branch, a Minnesota municipal corporation ("City") are parties to a Planned Unit Development and Subdivision Agreement dated _____, 2025 (the "Agreement") according to the terms of which the Developer agreed to construct certain Improvements to the Property owned by the Developer including certain Public Improvements to be dedicated to the City.

B. Pursuant to the Agreement, the Developer has furnished the City with a Letter of Credit in the amount of $_____issued by _____.

C. The Agreement further provides that the Improvements may be offered to the City in no more than three (3) dedications and that, if the City accepts the dedication of such Improvements, the Letter of Credit may be reduced by an amount equal to 100% of the estimated costs of the Improvements to be dedicated as determined by the City Engineer (the "Reduction Amount").

D. The Developer has completed certain of the Improvements and now desires to offer to dedicate such improvements (the "Dedicated Improvements") to the City and, upon the City's acceptance of such offer to provide the City with a replacement Letter of Credit in a reduced amount as allowed by the Agreement.

**OFFER OF DEDICATION**

The following provisions are hereby submitted to the City by the Developer in connection with the Agreement regarding the development of the Meadows North 3rd Addition Development within the City limits:

1. Offer of Dedication. The Developer hereby offers to dedicate to the City the Dedicated Improvements completed by the Developer pursuant to the Agreement as of the date hereof and generally described on Exhibit A attached hereto and incorporated herein.

2. Cost of Dedicated Improvements. The Developer hereby submits that the estimated cost of the Dedicated Improvements as determined by the City's Engineer is $_____ and that therefore the Reduction Amount is $_____.

3. Letter of Credit. The Developer hereby requests that the City execute a certificate verifying its acceptance of the Dedicated Improvements and waiving its right to draw on the Letter of Credit to the extent of the Reduction Amount and to allow the Developer to submit a replacement Letter of Credit in the amount of $_____representing the difference between the original Letter of Credit amount and the Reduction Amount requested hereunder.

4. Developer's Acknowledgment. Developer hereby acknowledges that, the Improvements will not be formally dedicated to the City until the City's final acceptance of the Public Improvements required by the Development Agreement as evidenced by a Certificate of Completion issued by the City and therefore the City's acceptance of the Offer of the Dedicated Improvements hereunder is expressly made contingent upon and subject to such formal statutory dedication requirements, the City's final acceptance of the Public Improvements and in all other respects is contingent upon the Developer's continued compliance with the terms and conditions of the Agreement. The Developer further acknowledges that as to tall Public Improvements, including the Dedicated Improvements, the Warranty Period defined in the Agreement, shall not commence until the City’s final acceptance of the Public Improvements.

5. Definitions. Capitalized terms not otherwise defined herein shall have the meanings given them on the Agreement.

Respectfully Submitted,

DEVELOPER:

WINDWARD DEVELOPMENT, LLC

By: _____

Josh Kopp

Its: Managing Member

**City of North Branch**
**Staff Report**

**Prepared By: Travis Miles, Human Resources Generalist**

**Presenter: Travis Miles, Human Resources Generalist**

**Date: 06/05/2025**

**Board & Commission: City Council**

**Subject: Accept the Resignation of City Staff Accountant, Nicholas Solberg, and Authorize Job Posting and Hiring Process**

---

**Overview / Background**

The City of North Branch received a written notice of resignation from Nicholas Solberg with his last day being June, 20th 2025. Mr. Solberg has been with the city since 2022, and we thank him for all his contributions to the city.

**Staff Recommendation**

City Staff recommends that City Council accept the resignation of Nicholas Solberg and authorizes the start of the hiring process.

**Voting Requirements:**

**Voting Options** **Simple Majority**

**City of North Branch**
**Staff Report**

**Prepared By: Nathan Sondrol, Community Development Director, Ryan Saltis**

**Presenter: Nathan Sondrol, Community Development Director**

**Date: 06/05/2025**

**Board & Commission: City Council**

**Subject: Consider Approval of Ordinance 394-25 to amend City Code Section 66-6 to allow Single Family Homes in the R3 Zoning District**

---

## Recommended City Council Action

Motion to approve a Text Amendment for Section 66-6, Zoning Districts Use Table to permit Single-Family Homes within the R-3 High Density Zoning District.

## Overview / Background

This request was first brought to the May 6, 2025 Planning Commission Meeting. The request for a Text Amendment was brought to the Planning Commission simultaneously with a request for Preliminary Plat approval of the proposed Cedar Ridge community which included single family homes. Planning Commission members discussed whether allowing for single family homes for this project specifically would create other issues in the future for other R-3 zoned parcels. It was determined at this meeting that the Planning Commission would need more information and research of how this amendment would impact other R-3 zoned parcels and recommended to deny the request to permit single family homes in the R-3 High Density Zoning District. A work session was held on May 27th in which City staff presented R-3 research. The discussion from the work session was centered around density requirements and current vacant parcels zoned R-3 in the city. Surrounding communities of Isanti and Cambridge were researched for comparison in which Isanti does not allow single family homes in their high density zoning district but Cambridge does allow for single family in high density districts, granted the development meets density requirements. From the research conducted, City staff does not foresee issues with allowing single family homes in the R-3 High Density District.

## Analysis of Issue(s)

Analysis of the single family homes in the R-3 District can be found in the May 6th Planning Commission Meeting Packet and May 27th Work Session R-3 Zoning District Research.

The Zoning District Table, if approved, would be amended to add the <u>underlined</u> language:

| District Uses | Notes | Standards | R 1 | R 2 | R 3 | R R | A G | PU B | OS P | CB D | B | B N | I 1 | I 2 | S O |
|---|---|---|---|---|---|---|---|---|---|---|---|---|---|---|---|
| **A. RESIDENTIAL USES** | | | | | | | | | | | | | | | |
| **Household Living** | | | | | | | | | | | | | | | |
| Dwelling, Single-Family | | | P | P | **<u>P</u>** | P | P | | | | | | | | |
| Dwelling, Single-Family (Prior to December 31, 2022) | | | | | **<u>P</u>** | | | | | P | | | | | |

**<u>Recommended City Council Action</u>**

Motion to approve a Ordinance 394-25 Text Amendment for Section 66-6, Zoning Districts Use Table to permit Single-Family Homes within the R-3 High Density Zoning District.

**Voting Requirements:**

**Voting Options** **Simple Majority**

**STATE OF MINNESOTA**

**COUNTY OF CHISAGO**

**CITY OF NORTH BRANCH**

**ORDINANCE NO. 394-25**

**ORDINANCE 393-25 Amending Chapter 66-6 of the City Code Regarding Residential Uses in the Zoning District Use Table to permit single family dwellings in the R-3 High Density Residential Zoning District.**

**THE CITY COUNCIL OF THE CITY OF NORTH BRANCH, MINNESOTA ORDAINS:**

Section 1. Amending Section 66-6 to add Single-Family Dwellings as a permitted use in the R-3 Zoning District.

City Code Section §66-6, Zoning District Use Table is hereby amended by adding the following underlined language:

| District Uses | Notes | Standards | R 1 | R 2 | R 3 | R R | A G | PU B | OS P | CB D | B | B N | I 1 | I 2 | S O |
|---|---|---|---|---|---|---|---|---|---|---|---|---|---|---|---|
| **A. RESIDENTIAL USES** | | | | | | | | | | | | | | | |
| **Household Living** | | | | | | | | | | | | | | | |
| Dwelling, Single-Family | | | P | P | **P** | P | P | | | | | | | | |
| Dwelling, Single-Family (Prior to December 31, 2022) | | | | | **P** | | | | | P | | | | | |

Section 2. Effective Date.

The Ordinance shall have full force and effect upon its passage and publication.

ADOPTED this 10th day of June 2025.

Approved:

_____

Kevin Schieber, Mayor

Attested:

_____

Matthew Hill, City Administrator

R-3 High-Density Residential Zoning District Research

Background:

At the May 6th Planning Commission Meeting, there was a public hearing for approval of a text amendment to allow single family homes within the R-3 High Density Residential Zoning District. Currently, single family residential homes are not permitted in the R-3 zoning district. Allowable uses in this zoning district include duplexes, triplexes, twin homes, quads, townhomes, multi-family housing, and apartments.

The text amendment to allow for single family residential in this district was brought to the Planning Commission simultaneously with a preliminary plat submittal for a proposed community called Cedar Ridge. The preliminary plat showed mostly single family homes, with potential areas for apartments that were ghost platted. At the time of the Planning Commission Meeting, there was minimal information regarding the apartments including the size, unit numbers, height, and minimal site planning around this area. Planning Commissioners questioned if the apartments were ever going to happen on this site, as the Cedar Ridge Plat was presented by homebuilders, not a development company interested in constructing apartments.

In order to meet the required minimum density requirements in the R-3 zoning district of 6 units per acre, the apartments would be crucial to bring density up for the site as a whole. The preliminary plat proposed 75 single family homes on the 62 acre site. There are 167 apartment units listed on the preliminary plat.

The dimensional and design standards table currently lists requirements for single family homes in the R-3 zoning district, even though at this time they are not permitted. The Zoning District Use Table and Dimensional & Design Standards Table contradict each other, meaning that one has to change to be consistent with what is allowed in the R-3 Zoning District.

Zoning District Use Table:

| District Uses | Notes | Standards | R1 | R2 | R3 | RR | AG | PUB | OSP | CBD | B | BN | I1 | I2 | SO |
|---|---|---|---|---|---|---|---|---|---|---|---|---|---|---|---|
| **A. RESIDENTIAL USES** | | | | | | | | | | | | | | | |
| **Household Living** | | | | | | | | | | | | | | | |
| Dwelling, Single-Family | | | P | P | | P | P | | | | | | | | |
| Dwelling, Single-Family (Prior to December 31, 2022) | | | | | | | | | | P | | | | | |
| Dwelling, Two-Family (Duplex) & Triplex | | | | P | P | | | | | P | | | | | |
| Dwelling, Twin Homes | | | P | P | P | | | | | | | | | | |
| Dwelling, Quad & Townhome | | | | P | P | | | | | | | | | | |
| Dwelling, Multi-Family (3 to 6 units) | | | | P | P | | | | | P | | | | | |
| Dwelling, Multi-Family (7 to 16 units) | | | | | P | | | | | P | | | | | |
| Dwelling, Apartments | | | | | P | | | | | P | P | | | | |
| Dwelling, Apartments Above Commercial | | | | | | | | | | P | P | P | | | |
| Dwelling, Prefabricated Home | | | | C | C | | | | | | | | | | |
| **Household Living** | | | | | | | | | | | | | | | |
| Boarding Home/Foster Children (6 or fewer persons) | | | P | P | P | P | P | | | | | | | | |
| Senior Community, Independent or Assisted Living | | | | | C | | | | | P | P | | | | |
| Care Facility (6 or fewer disabled persons) | State License | | P | P | P | P | P | | | | | | | | |
| Care Facility (7 to 16 disabled persons) | State License | | | | C | | | | | | | | | | |

Dimensional & Design Standards Table:

**Dimensional & Design Standards Table**

| Use | R-1 single family | R-1, 2 family dwellings, per unit | R-2, single family | R-2, 2 family dwellings, per unit | R-2, 3-6 attached units, per townhouse | R-3, 2 family dwellings, per unit | R-3 3-6 attached units - per townhouse | R-3: 7+ attached units and condominiums (see below for apartment standards)[H] | R -3 detached single family |
|---|---|---|---|---|---|---|---|---|---|
| Front yard setback- interior - in ft - at lot line or ROW | 30 | 30 | 30 | 30 | 30 | 30 | 30 | 30 | 30 |
| Lot Width - corner - in ft at front set-back line | 80 | 50 | 80 | 50 | 150 | 50 | 150 | 150 | 50 |
| Lot Width - in ft - at front set-back line | 80 | 50 | 80 | 50 | 150 | 50 | 150 | 150 | 50 |
| Ditch easement - in ft | 45 | 45 | 45 | 45 | 45 | 45 | 45 | 45 | 45 |
| Rear yard setback- interior lot - in ft | 30 | 30 | 30 | 30 | 30 | 30 | 30 | 30 | 30 |
| Rear-yard setback corner lot - in ft | 15 | 15 | 15 | 15 | 15 | 15 | 15 | 30 | 15 |
| Side set-back- interior lot - in ft | 6 | 6', 0' for attached portion of unit | 6 | 6', 0' for attached portion of unit | 6', 0' for attached portion of unit | 6', 0' for attached portion of unit | 6', 0' for attached portion of unit | 10 | 6 |
| Side setback- corner - in ft | 30 | 30 | 30 | 20 | 30 | 30 | 20 | 30 | 30 |
| Lot Depth - minimum in ft | 100 | 100 | 100 | 100 | 100 | 100 | 100 | 100 | 100 |
| Minimum Lot Size - sq ft | 12,000 | 7,500 | 12,000 | 6,500 | 2,000 | 6,500 | 2,000 | Not more than 35% of the lot shall be covered by all buildings. | 6,500 |
| Maximum base density | 1-4 units per acre | 1-4 units per acre | 1-6 units per acre | 1-6 units per acre | 1-6 units per acre | 6+ units per acre | 6+ units per acre | 6+ units per acre | 6+ units per acre |
| Minimum Principal building size sq ft - main floor, per dwelling [C] | 800 | 800 | 800 | 800 | 800 | 800 | 800 | 800 | 800 |

Total R-3 area in North Branch: 265 Acres

Total R-3 (Developed): 105 Acres

Total R-3 (Undeveloped/Vacant): 160 Acres

Surrounding Communities Research:

## Isanti:

Isanti classifies their high density residential zoning district as R-4 “Multiple Family Dwelling District”. This district accommodates multi-family dwellings such as apartments and condominiums. This zoning district allows a maximum density of twelve units per acre. Single Family Houses are not permitted in the R-4 Zoning District. Single Family homes are permitted in the R-3A “Low Density Multiple Family District”, where the maximum density is 6 units per acre. This is the highest density classification allowed for single family homes in Isanti.

### ARTICLE THREE: “R-3A” LOW DENSITY MULTIPLE FAMILY DISTRICT

**Subdivision 1: Purpose**
The “R-3A” Low Density Multiple Family District is designed to provide for low density areas, which accommodate a variety of housing types, to include detached and attached single-family, two-family, duplexes, and attached and detached townhomes. These districts shall be located and are intended to function as a transition area between the less intense single-family developments and the more intense multiple family districts. The district promotes more walkable neighborhoods with a variety of housing types.

**Subdivision 2: Permitted Uses**
The following are permitted uses:

A. Conversion of a residential dwelling, subject to the requirements as provided within Section 13 of this Ordinance.

B. Dwellings, Single-family detached.

Minimum lot sizes for single family homes in the R-3A District are set at 7,500 square feet.

Minimum lot width is 60 feet.

Setbacks are set at 30 feet for the front/rear, and 10 feet on the sides.

### ARTICLE FIVE: “R-4” MULTIPLE FAMILY DWELLING DISTRICT

**Subdivision 1: Purpose**
The “R-4” Multiple Family Dwelling District is designed to provide for high density areas, which accommodate various types of multi-family dwellings, such as apartments and condominium-style housing. Developments within this district shall be developed as part of a Planned Unit Development, as densities within this district will meet the maximum density goal of twelve (12) units per acre. Higher densities may be permitted and such determination shall be based upon the site-specific characteristics and the requested type of development. These districts shall be located in areas served by public utilities and municipal services as well as in areas with accessibility to collector streets, shopping centers, employment centers and where this type of development would meet the intent and goals established within the Comprehensive Plan.

## Cambridge:

Cambridge allows single family dwellings in the same zoning district as apartments as shown on the chart below:

| *DISTRICT* | | | | *USE* |
|---|---|---|---|---|
| **R-1** | **R-1A** | **R-2** | **R-3** | RESIDENTIAL AND LODGING USES |
| P | P | P | P | Dwellings, Single Family |
| | | P | P | Dwellings, Two-Family |
| | | C | P | Dwellings, Multiple Family |
| | | C | C | Manufactured Home Complexes, pursuant to § 156.064 |
| I | I | I | I | Rooming/Boarding House |
| | | C | P | Townhouses |

Minimum lot area for single family homes in the R-3 District is set at 6,750 square feet.

| | R-1 | R-1A | R-2[5] | R-3[6] |
|---|---|---|---|---|
| **Minimum Lot Area in Square Feet** | | | | |
| One-Family Dwelling | 11,000 | 9,400 | 6,750 | 6,750 |
| Two-Family Dwelling | N/A | N/A | 9,000 | 9,000 |
| Multiple Family Dwelling | N/A | N/A | 15,000, but not less than 2,000 sf for each dwelling unit | 20,000, but not less than 2,000 sf for each dwelling unit |
| Minimum Lot Width in Feet[1] | 80 | 70 | 50 | 100 |
| Minimum Lot Depth in Feet | 120 | 120 | 109 | 120 |

Minimum lot widths are 100 feet and minimum lot depth is 120 feet.

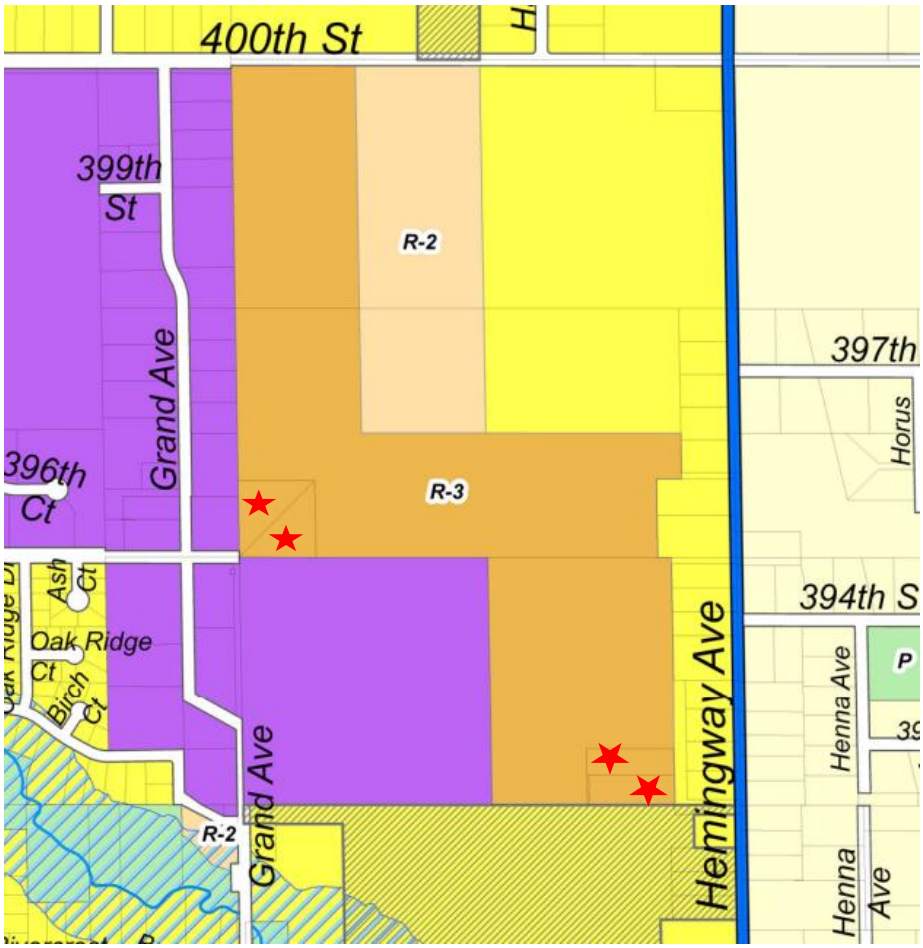


- 93.87 Acres Total
- 6.96 Acres – Existing Single Family Homes (4 Parcels)
- 86.91 Acres – Vacant Farmland
    - 516 total units minimum (to meet density of 6 units per acre)
    - 6500 square foot lot minimum for R-3 detached single family
        - 50’ x 130’ to meet lot minimums
    - 50 foot lot width minimums
    - 100 foot lot depth minimums
- 7,260 square feet = maximum lot size to meet density of 6 units per acre for single family detached structures

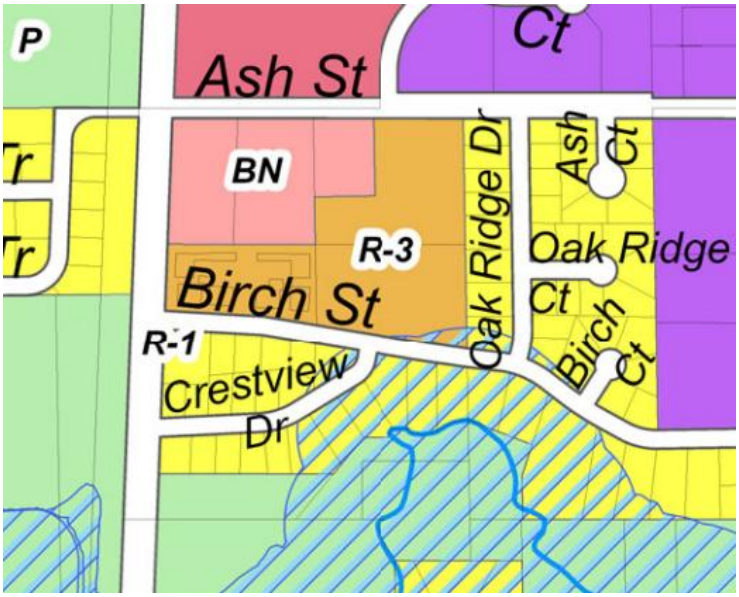


- 10.48 Acres Total
- Current Use: Apartments
    - Splittstoser Apartments
        - 6 buildings – 4 units each building
    - Ashwood Birchwood Apartments
        - 4 buildings: Three levels each

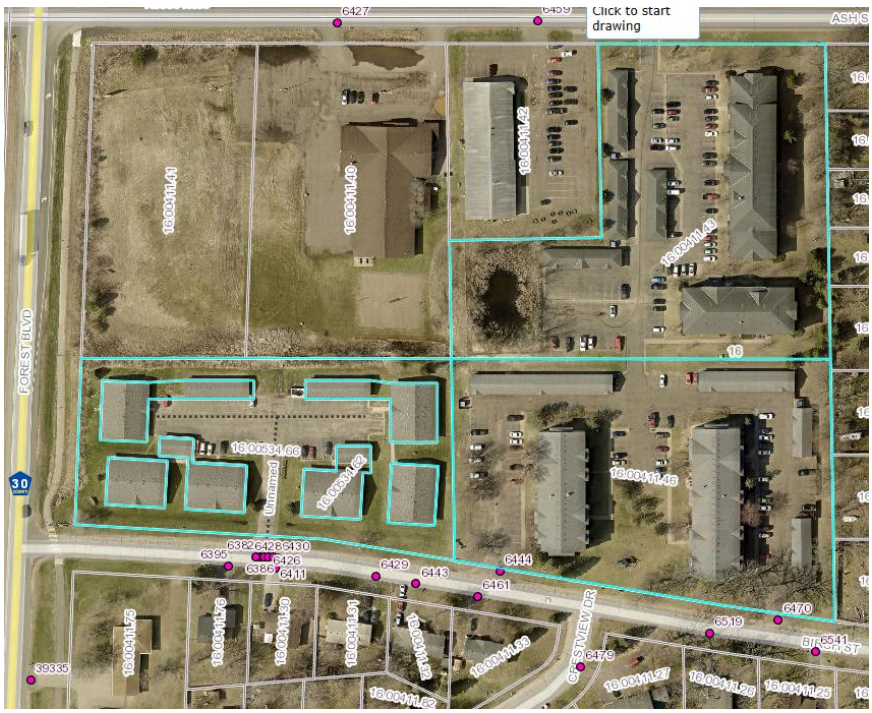

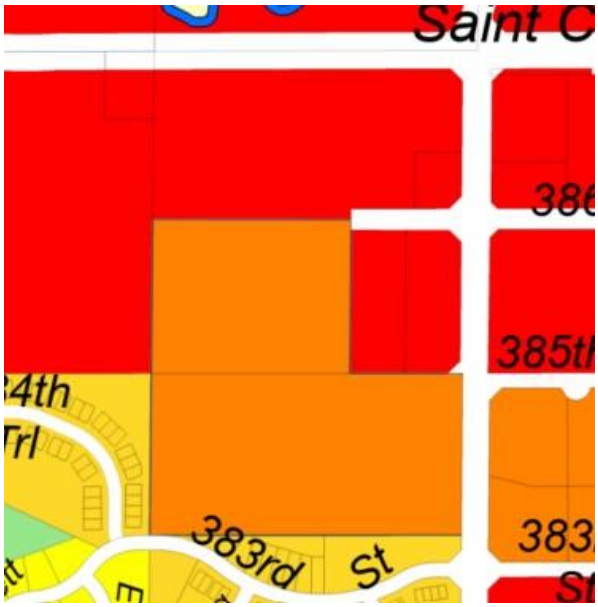


- 12 Acres Total
- Vacant parcel
- 386th Street on north
    - Proposed Independent Active Senior Living Facility (104 units)
    - Future commercial development to north

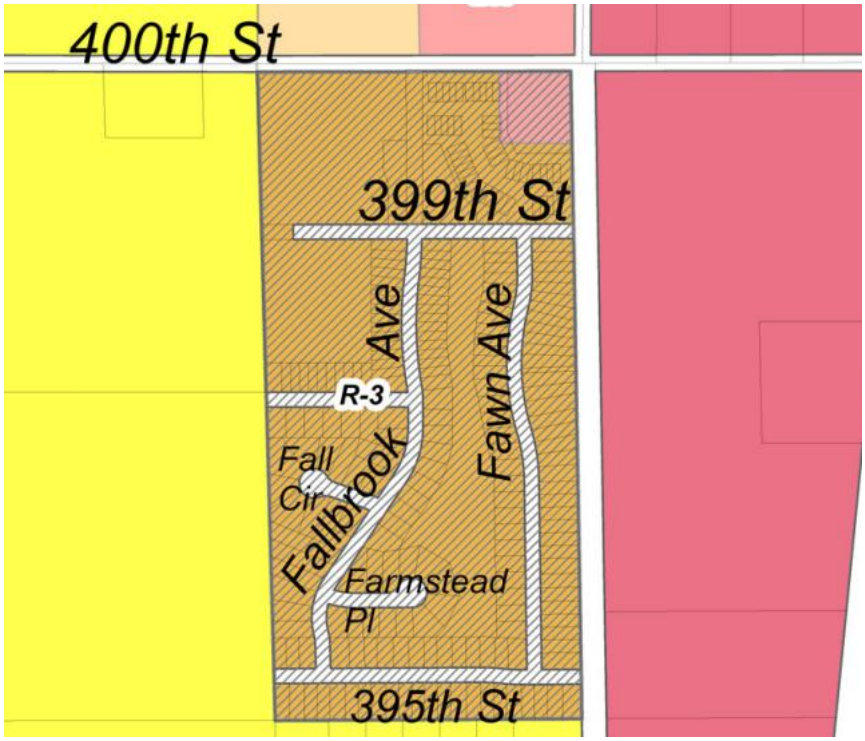


- 70.02 Acres Total
- Meadows North Planned Unit Development (PUD)
    - Underlying R-3 Zoning
- Single Family Homes and Townhomes
- 50 foot wide lots for single story slab on grade homes

- 2.78 acres
- 4 Parcels
- 2 story apartment buildings

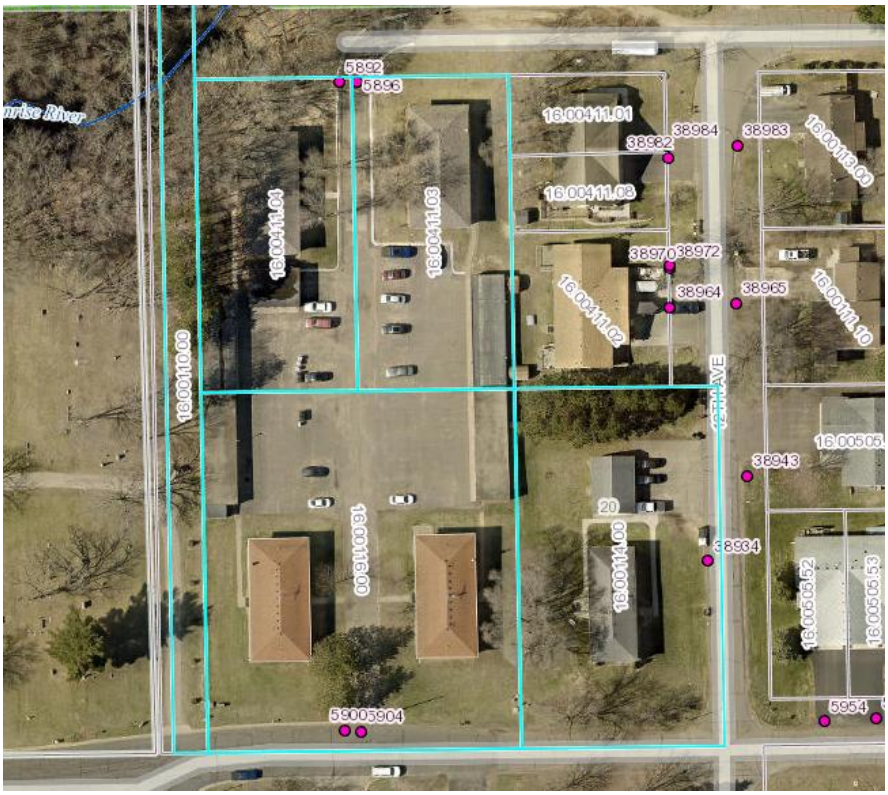

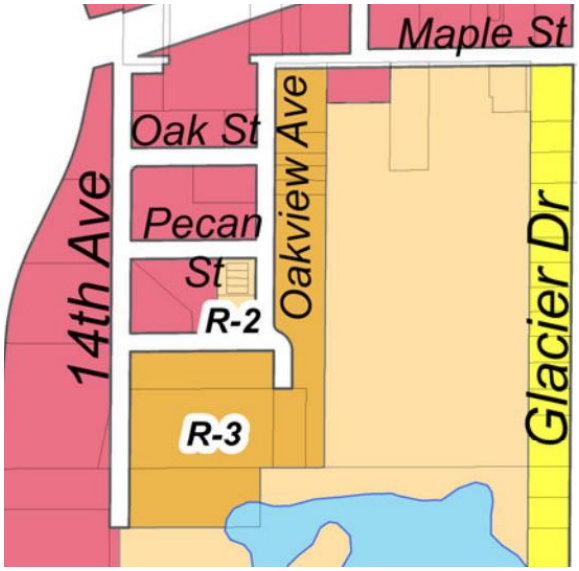


- 12.29 Acres Total
- Mix of Townhomes (attached and detached) and apartments
- Fully developed

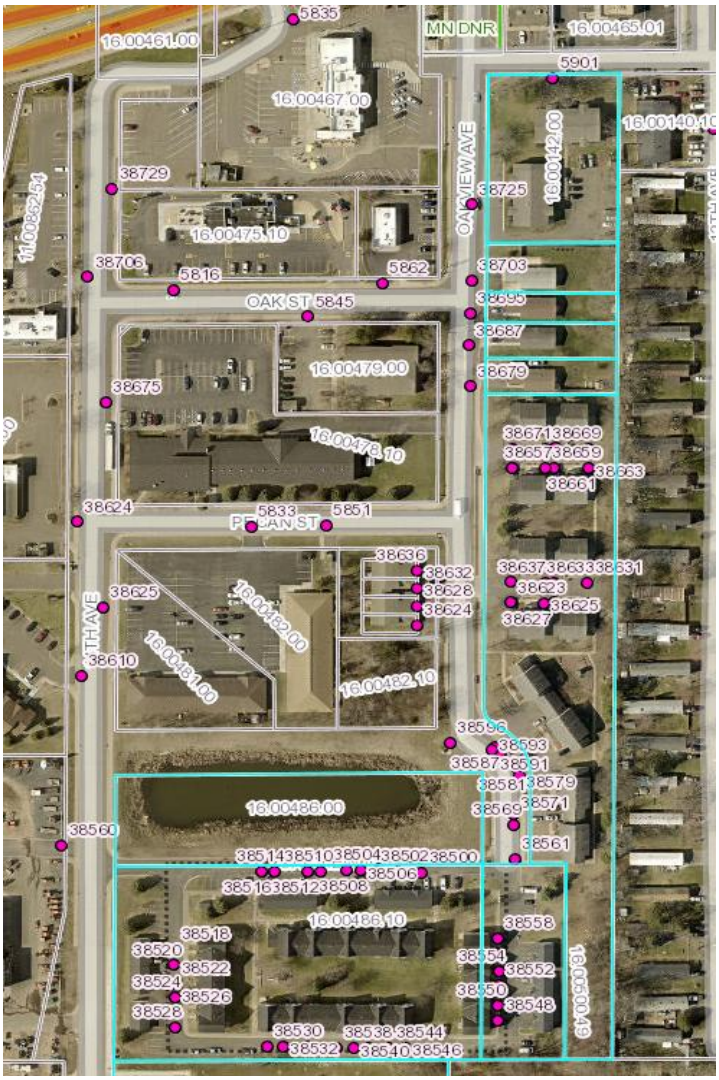

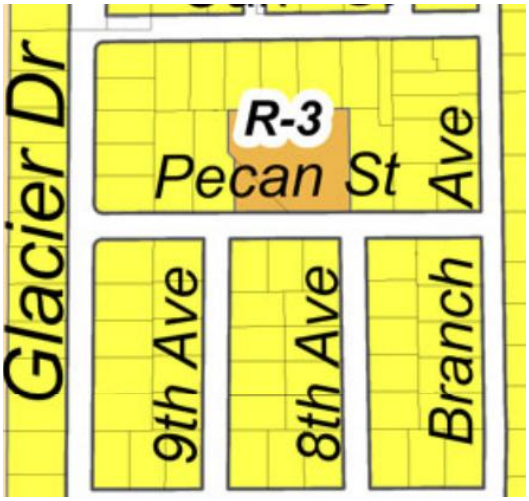


- 1.46 Acres Total
- 2 Parcels – Fully Developed
- Current Use: Apartment Building (Northern Oaks Apartments)

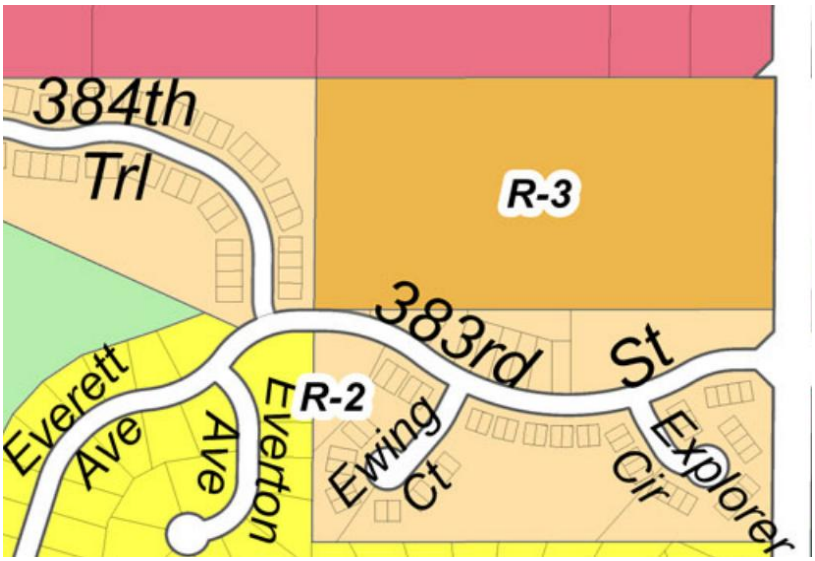


- 19.22 Acres Total
- Current Use: Single Family Home (South ½) and Farmland (North ½)
- 114 units minimum to meet density of 6 units per acre

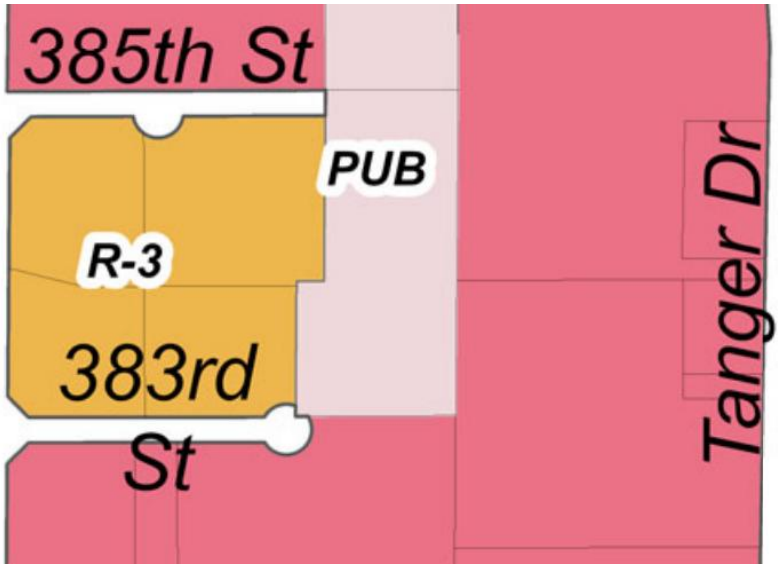


- 11.56 Acres Total
- Current Use: Falcon Apartments
- 4 Parcels – Each building on separate parcel
- 4 Buildings – 3 stories each
- Fully developed

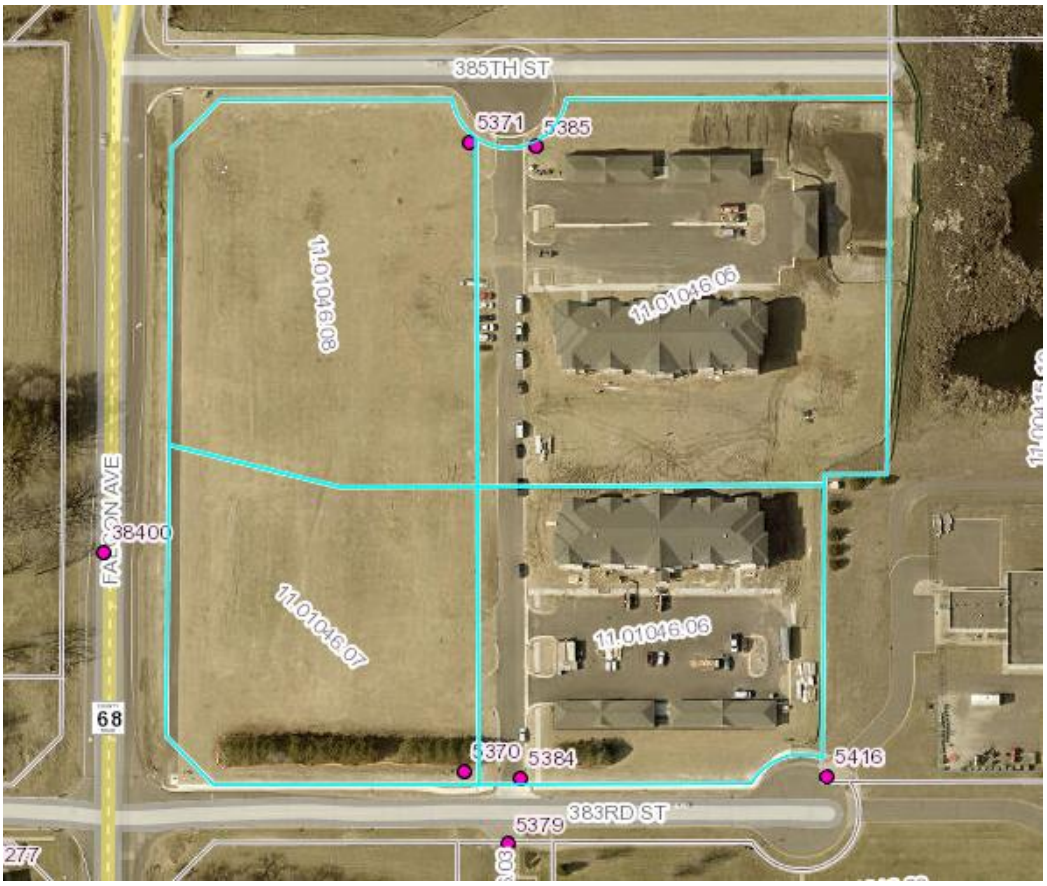

- 51.95 Acres Total
- 5 Parcels
- Splits Parcels with R-3 and Business Zoning
    - R-3 Zoning along Falcon Ave
    - B Business Zoning fronting I-35
- Cedar Ridge Community proposed on north parcel
    - Proposing single family houses
    - Single Family Houses currently not a permitted use in the R-3 Zoning District
- All parcels vacant/developable land

| District Uses | Notes | Standards | R1 | R2 | R3 | RR | AG | PUB | OSP | CBD | B | BN | I1 | I2 | SO |
|---|---|---|---|---|---|---|---|---|---|---|---|---|---|---|---|
| **A. RESIDENTIAL USES** | | | | | | | | | | | | | | | |
| **Household Living** | | | | | | | | | | | | | | | |
| Dwelling, Single-Family | | | P | P | | P | P | | | | | | | | |
| Dwelling, Single-Family (Prior to December 31, 2022) | | | | | | | | | | P | | | | | |
| Dwelling, Two-Family (Duplex) & Triplex | | | | P | P | | | | | P | | | | | |
| Dwelling, Twin Homes | | | P | P | P | | | | | | | | | | |
| Dwelling, Quad & Townhome | | | | P | P | | | | | | | | | | |
| Dwelling, Multi-Family (3 to 6 units) | | | | P | P | | | | | P | | | | | |
| Dwelling, Multi-Family (7 to 16 units) | | | | | P | | | | | P | | | | | |
| Dwelling, Apartments | | | | | P | | | | | P | P | | | | |
| Dwelling, Apartments Above Commercial | | | | | | | | | | P | P | P | | | |
| Dwelling, Prefabricated Home | | | | C | C | | | | | | | | | | |
| **Household Living** | | | | | | | | | | | | | | | |
| Boarding Home/Foster Children (6 or fewer persons) | | | P | P | P | P | P | | | | | | | | |
| Senior Community, Independent or Assisted Living | | | | | C | | | | | P | P | | | | |
| Care Facility (6 or fewer disabled persons) | State License | | P | P | P | P | P | | | | | | | | |
| Care Facility (7 to 16 disabled persons) | State License | | | | C | | | | | | | | | | |

| District Uses | Notes | Standards | R1 | R2 | R3 | RR | AG | PUB | OSP | CBD | B | BN | I1 | I2 | SO |
|---|---|---|---|---|---|---|---|---|---|---|---|---|---|---|---|
| **B. PUBLIC, INSTITUTIONAL & CIVIC** | | | | | | | | | | | | | | | |
| **Community & Cultural Facilities** | | | | | | | | | | | | | | | |
| Cemetary, Columbarium, Mausoleum | | | P | P | P | P | P | P | | | C | | | | |
| Government Building | | | P | P | P | P | P | P | P | P | P | P | P | P | |
| Campground | | | | | | | C | | | | | | | | |
| Park & Playground Facilities | | | P | P | P | P | P | P | P | P | P | P | P | P | |
| Recreation Complex, Public (Indoor)[1] | See Footnotes | | | | | | | P | P | P | P | P | P | P | |
| Recreation Complex, Public (Outdoor)[2] | See Footnotes | | P | P | P | P | P | P | P | P | P | P | | | |
| Religious Institutions & Assembly | | | C | C | C | C | C | C | | | | P | | | |
| Religious Institutions & Assembly (Prior to 08/08/2022) | | | | | | | | | | P | | | | | |
| Transit Facility, Maintenance | | | | | | | | | | | | | C | C | |
| Transit Facility, Commuter Station | | | | | | | | C | | | C | C | C | | |
| **Educational Facilities** | | | | | | | | | | | | | | | |
| School, Elementary, Middle, High (Private/Charter) | | | | | | | | P | | P | P | P | | | |
| School, Elementary, Middle, High (Public) | | | P | P | P | | | P | | | | | | | |
| College, Community, Technical & University | | | | | | | | P | | P | P | | | | |
| **Utilities** | | | | | | | | | | | | | | | |
| Electric Power Substation | | | P | P | P | P | P | P | P | P | P | P | P | P | |
| Wind Power Generation | | | | | | C | C | C | | | | | C | C | |
| Solar Power Generation | Solar Farms | §66-980 | | | | P | P | P | | | | | C | C | |
| Water & Wastewater Treatment Facilities, Wells & Lift Station | | | P | P | P | P | P | P | P | P | P | P | P | P | |

**Dimensional & Design Standards Table**

| Use | R-1 single family | R-1, 2 family dwellings, per unit | R-2, single family | R-2, 2 family dwellings, per unit | R-2, 3-6 attached units, per townhouse | R-3, 2 family dwellings, per unit | R-3 3-6 attached units - per townhouse | R-3: 7+ attached units and condominiums (see below for apartment standards)[H] | R -3 detached single family | RR | AG | Public | CBD | B1 | BN | I1 | I2 | Flood plain | Shore-land |
|---|---|---|---|---|---|---|---|---|---|---|---|---|---|---|---|---|---|---|---|
| Front yard setback- interior - in ft - at lot line or ROW | 30 | 30 | 30 | 30 | 30 | 30 | 30 | 30 | 30 | 40 | 50 | 30 | 0 | 15, 50 outside USA | 15 | 20, 50 outside of USA | 20, 50 outside of USA | | |
| Lot Width - corner - in ft at front set-back line | 80 | 50 | 80 | 50 | 150 | 50 | 150 | 150 | 50 | 110 | 300 | NA | 25 | 50, 300 outside of USA | 50 | 100, 300 outside of USA | 100, 300 outside of USA | | |
| Lot Width - in ft - at front set-back line | 80 | 50 | 80 | 50 | 150 | 50 | 150 | 150 | 50 | 110 | 300 | NA | 25 | 50, 300 outside of USA | 50 | 100, 300 outside of USA | 100, 300 outside of USA | | |
| Ditch easement - in ft | 45 | 45 | 45 | 45 | 45 | 45 | 45 | 45 | 45 | 45 | 45 | 45 | 45 | 45 | 45 | 45 | 45 | See Division 18 | See Division 19 |
| Rear yard setback- interior lot - in ft | 30 | 30 | 30 | 30 | 30 | 30 | 30 | 30 | 30 | 30 | 50 | 30 | 0 | 15, 50 outside USA | 15 | 20, 50 outside of USA | 20, 50 outside of USA | | |
| Rear-yard setback corner lot - in ft | 15 | 15 | 15 | 15 | 15 | 15 | 15 | 30 | 15 | 15 | 50 | 15 | 0 | 15, 50 outside USA | 15 | 20, 50 outside of USA | 20, 50 outside of USA | | |
| Side set-back- interior lot - in ft | 6 | 6', 0' for attached portion of unit | 6 | 6', 0' for attached portion of unit | 6', 0' for attached portion of unit | 6', 0' for attached portion of unit | 6', 0' for attached portion of unit | 10 | 6 | 10 | 50 | 6 | 0 | 10, 0 if attached, 50 outside USA | 10 | 20, 50 outside of USA | 20, 50 outside of USA | | |
| Side setback- corner - in ft | 30 | 30 | 30 | 20 | 30 | 30 | 20 | 30 | 30 | 30 | 50 | 30 | 0 | 15, 50 outside USA | 15 | 20, 50 outside of USA | 20, 50 outside of USA | | |
| Lot Depth - minimum in ft | 100 | 100 | 100 | 100 | 100 | 100 | 100 | 100 | 100 | 300 | 500 | NA | 100 | 100, 300 outside of USA | 100 | 100, 300 outside of USA | 100, 300 outside of USA | | |
| Minimum Lot Size - sq ft | 12,000 | 7,500 | 12,000 | 6,500 | 2,000 | 6,500 | 2,000 | Not more than 35% of the lot shall be covered by all buildings. | 6,500 | 1 acre buildable | 10 acres | NA | 2,500 | 5,000 in USA, 10 acres outside USA | 5,000 | 10,000, 10 acres outside of USA | 10,000, 10 acres outside of USA | | |
| Maximum base density | 1-4 units per acre | 1-4 units per acre | 1-6 units per acre | 1-6 units per acre | 1-6 units per acre | 6+ units per acre | 6+ units per acre | 6+ units per acre | 6+ units per acre | 1 house per buildable acre | 1 SF home | NA | NA | NA | NA | NA | NA | | |
| Minimum Principal building size sq ft - main floor, per dwelling[C] | 800 | 800 | 800 | 800 | 800 | 800 | 800 | 800 | 800 | 800 | 800 | NA | ~ | ~ | ~ | ~ | ~ | | |
| Apartment -Miniumum sq ft | | | | | | | | | | | | | | | | | | | |
| Efficiency/studio | NA | NA | NA | NA | 400 | NA | 400 | 400 | NA | NA | NA | NA | 400 | 400 | NA | NA | NA | | |
| 1 bedroom | NA | NA | NA | NA | 800 | NA | 800 | 650 | NA | NA | NA | NA | 650 | 650 | NA | NA | NA | | |
| 2 bedroom | NA | NA | NA | NA | 800 | NA | 800 | 750 | NA | NA | NA | NA | 750 | 750 | NA | NA | NA | | |
| 3 bedroom | NA | NA | NA | NA | 800 | NA | 800 | 850 | NA | NA | NA | NA | 850 | 850 | NA | NA | NA | | |
| Principal Structure - Min Width[J] - in ft | 24 | 24 | 24 | 24 | 24 | 24 | 24 | 24 | 24 | 24 | 24 | NA | NA | NA | ~ | ~ | ~ | | |

| | | | | | | | | | | | | | | | | | |
|---|---|---|---|---|---|---|---|---|---|---|---|---|---|---|---|---|---|
| Garage - sq ft | 400 [B] | 400 [B] | 400 [B] | 400 [B] | 400 [B] | 400 [B] | if provided, 200 [E] | ~ | 400 | 400 [B] | 400 [B] | NA | ~ | ~ | ~ | ~ | ~ |
| Wetland natural buffer /structure setback | 20 | 20 | 20 | 20 | 20 | 20 | 20 | 20 | 20 | 20 | 20 | 20 | 20 | 20 | 20 | 20 | 20 |
| Building height - in ft | 35 [A] | 35 [A] | 35 [A] | 35 [A] | 35 [A] | 35 [A] | 35 [A] | 3 stories or 50' [A] | 35 [A] | 35 [A] | 35 [A] | 75 [A] | 50 [A] | 50 [A] | 50 [A] | 75 [A] | 75 [A] |
| Impervious surface - maximum | 50% | 50% | 50% | 50% | 50% | 50% | 70% | 75% | 70% | 50% | 50% | NA | na | 90% | 90% | 90% | 90% |
| Floor elevation (lowest) | 3 | 3 | 3 | 3 | 3 | 3 | 3 | 3 | 3 | 3 | 3 | NA | 3 | 3 | 3 | 3 | 3 |
| Floor elevation (lowest) - 100 yr flood - in ft | 2 | 2 | 2 | 2 | 2 | 2 | 2 | 2 | 2 | 2 | 2 | NA | 2 | 2 | 2 | 2 | 2 |
| Foundation Requirements | Yes [C] | Yes [C] | Yes [C] | Yes [C] | Yes [C] | Yes [C] | Yes [C] | Yes [C] | Yes [C] | Yes [C] | Yes [C] | NA | Yes [C] | Yes [C] | Yes [C] | Yes [C] | Yes [C] |
| Driveway Surfacing | Yes [D] | Yes [D] | Yes [D] | Yes [D] | Yes [D] | Yes [D] | Yes [D] | Yes [D] | Yes [D] | Yes [D] | NA | NA | Yes [D] | Yes [D] | Yes [D] | Yes [D] | Yes [D] |
| Landscape Requirements | Yes [E] | Yes [E] | Yes [E] | Yes [E] | Yes [E] | Yes [E] | Yes [E] | Yes [E] | Yes [E] | Yes [E] | Yes [E] | NA | Yes [E] | Yes [E] | Yes [E] | Yes [E] | Yes [E] |
| Sign Requirement | Yes [F] | Yes [F] | Yes [F] | Yes [F] | Yes [F] | Yes [F] | Yes [F] | Yes [F] | Yes [F] | Yes [F] | Yes [F] | NA | Yes [F] | Yes [F] | Yes [F] | Yes [F] | Yes [F] |
| Off-Street Parking Requirements | Yes [G] | Yes [G] | Yes [G] | Yes [G] | Yes [G] | Yes [G] | Yes [G] | Yes [G] | Yes [G] | Yes [G] | Yes [G] | NA | Yes [G] | Yes [G] | Yes [G] | Yes [G] | Yes [G] |

**All buildings shall comply with State of MN Building Code. PRovisions for decks shall be shown on original plans when a sliding glass door, patio door, etc. is installed.**
**Provisions for decks must be shown on original plans when a sliding glass door, patio, door, etc. are to be installed**

A. Height Exceptions - building height limits shall not apply to belfries, cupolas, domes, spires, monuments, airway beacons, radio towers, flag poles, chimneys or flues; nor to elevators, watertanks, poles, towers and other structures for essential services; nor to similar structures extending above the roof of any building and not occupying more than 25 percent of the area of such roof.

B. Rear or side yard or attached garage required.

C. Foundation Requirements -Permanent full perimeter footings; with foundation walls of concrete, concrete block, wood or any other approved material or method. Decks and porches are allowed on pier type footings.

D. Residential - See Section 66-855. All zoning districts: shall be concrete or bituminous, unless stated otherwise.

E. See Article 10- Landscaping Requirements; except Ag, see Section 66-390.

F. See Article 6 - Sign requirements

G. See Article 7 - Off Street Parking Requirements.

H. Setbacks measured from outside walls or the edge of private condo spaces including ground level decks and yard spaces.

**City of North Branch**
**Staff Report**

**Prepared By: Nathan Sondrol, Community Development Director**

**Presenter: Nathan Sondrol, Community Development Director**

**Date: 04/29/2025**

**Board & Commission: Planning Commission**

**Subject: Public Hearing to Consider Requests for a preliminary plat for Cedar Ridge Community and a zoning text amendment to clarify single family homes a permitted use in the R-3 Zoning District**

---

## Applicants Request

1. Text Amendment for Section 66-6, Zoning Districts-Use Table; R3 Dwelling, Single-Family change to permitted use.
2. Preliminary plat approval for Cedar Ridge Community

## Overview / Background

There are two parts to this application, one being a zoning text amendment and the other a preliminary plat review. The text amendment is being processed to address the ambiguity in the current ordinance relating to R3 uses. The land use table specifically omits single family dwellings from the R3 zoning district, while the Dimensional and Design Standards Table specifically includes small detached single family lot dimensional requirements. The Commission and Council should determine if single family is an appropriate use in the R3 zoning district given that the district is a high density residential district and single family, typically a low density use, may not be appropriate. As currently provided, the dimensional standards for the R3 are not traditional standards and permit small lots of 50’ in width and a minimum lot size of 6500 square feet.

The 62 acre parcel is being subdivided to create 75 small lot single family home sites, 3 lots for future apartment development (167 units in total), and 7 outlots which will be for future commercial development or stormwater ponding depending upon the location of the parcel.

At present the applicant is proposing construction of the single family homes with necessary infrastructure. Phase I also includes some apartment buildings however, little information is

available for that portion of the project. To the east, Outlots E and F will be replatted for commercial development. There is no information available about lot layout or future users. The main access into the site is through the extension of 381st Lane which will provide access to all apartments and the commercial lots as well as single family units. The other western access is 382nd Drive turning into Falk Avenue which winds through the project providing access to individual lots and functioning like a neighborhood collector road. Two cul de sacs, Fallcrest Court and Farnham Court, also provide access for individual single family lots. Tanger Drive right of way is being provided; running along the eastern edge of the site to provide a southward road extension which will function as a frontage road for the commercial along I-35. There is a curve in the road in the north, to bypass an existing wetland.

There are a variety of issues associated with the project which are enumerated in the information below. One of the main concerns of staff is the areas not being developed as single family. It is unclear what the final product will be on these sites and if the platted properties can adequately accommodate needed parking and building area while meeting setbacks, open space and other performance standards.

**Attachments**

**Issue(s) to Consider**

1. Zoning Ordinance Text Amendment
2. Land Use and Zoning
3. Development Plan
4. Plat Standards

**Analysis of Issue(s)**

1. **Zoning Ordinance Text Amendment**

The Commission and Council are being asked to amend the zoning ordinance to address an inconsistency between the various sections of the Code. In the zoning Districts Use Table Section 6-66, under the Dwelling, Single Family row there is nothing listed in the R3 zoning district, meaning it is not permitted. The Dimensional & Design Standards Table provides regulations for R-3 detached single family, implying this use is permitted by ordinance. To accommodate the higher density uses of the R-3 zoning, the table allows for small lot single family, whereas the lot width is a minimum of 50 feet and the lot dept is 100 feet and the minimum lot size is 6,500 square feet, a little over half the size of R-1 single family lots.

Staff is looking for direction from the Commission and Council on this question. If it is

determined that the R-3 should not allow single family detached lots as one of the unit types, the project could not be approved. If the Commission and Council determine that the R-3 zoning district is an appropriate location for small lot single family, the project could continue to move forward, pending successfully addressing all project issues.

In the recent past, the City Council has expressed some concern about small lot single family development, particularly when achieved through a PUD. Use of the R-3 to permit some small lot development may allow higher density, without requiring only apartments. Further, this may be a solution to direct future developers to the R-3 district for smaller lots rather than granting modifications to detached single family lots in the R-1 or R-2 zoning districts.

2. **Land Use & Zoning**

The adopted Comprehensive Plan designates the site into two different land uses. The eastern section of the site is designated LUB-Business with the western section designed LUR-3 High Density Residential. The High Density Residential designation is for development of over 6 dwelling units per acre. In order to achieve the required density, the property must combine the proposed single family development with a higher density product, like the anticipated apartment buildings.

The zoning map is similar in the split of the two land uses with Business in the east, along I-35 and R-3 High Density Residential in the west. The map defines a line between the two uses although it is unclear if the exact location of the land use split must define the change between residential and commercial uses. Below is an overlay of the zoning map on the site. It shows that a portion of the commercial zoning overlaps the single family on the north and also includes portions of the drainage pond needed for the residential development.

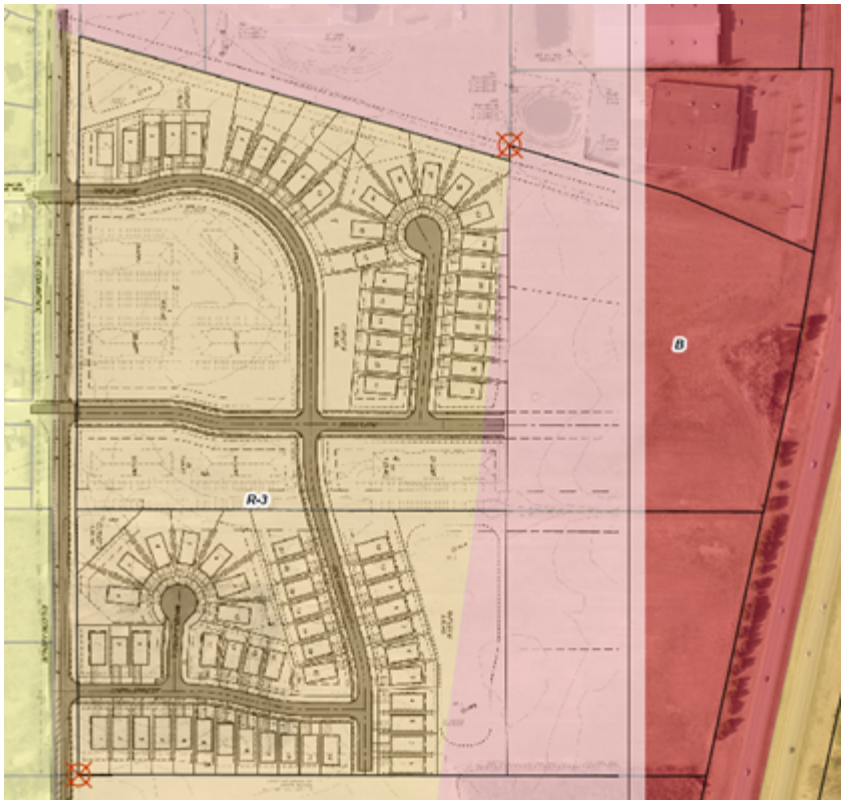


Generally, staff wants to ensure that the amount of land available for commercial is reasonably sized and has dimensional attributes that can accommodate future commercial development without the need of variance. For that reason, staff had requested, and not received, a concept plan which could illustrate a reasonably size non-residential use on the approximate 21 acres designated for commercial development.

3. **Development Overview**

General Plan

The project is comprised of three different land uses. There is the 75 detached single family development located within the R3 zoned area. Many of the lots are located in the western portion of the site with some adjacent to Falcon Avenue, a busy Major Collector road. There is ponding in the northwest also adjacent to Falcon Avenue providing some separation from the traffic, and there is additional pond in the southern single family neighborhood also against the road. It appears that the building pad sites are at a similar elevation to Falcon Avenue meaning there is little ability to create a berm for buffering. The lots immediately adjacent to Falcon Avenue do have larger setbacks, increasing the separation between the road and the building footprint. The landscape plans illustrate more trees along Falcon Avenue providing some screening and it is recommended substantially more plantings be added. For example, Lot 1 Block 5 has 4 trees which equates to 1 tree every 43' along the side of the lot.

The second land use type is multi-family apartments. The applicant illustrates a total of 167

apartment dwelling units within seven different buildings. There are two located south and west of Falk Avenue and 381st Lane and one 30 unit building east of Falk Avenue. There are an additional four buildings located in the space between Falcon Avenue and the ring road of 382nd Drive. Aside from the building outline and parking lots the applicant has not provided any information about the apartment buildings or landscaping. Any approval for this project would not include formal approval of the apartments and additional applications will be required in the future. However, residents should expect multi-family development in these area. The density for this apartment portion of the project is 16.2 units/acre (167 units/10.3 acres). The total density for the residential portion of the site is 6.29 units/acre, slightly over the "6 and above" density standard.

The third land use is designated for business and commercial uses, consistent with other uses anticipated along I-35, a high traffic and visibility corridor. Aside from the dedication of the Tanger Road right of way and the recognition that 381st Lane will provide access into the commercial area there is little known. The site is a commercial area comprised of outlots E and F which total approximately 21 acres. The calculation has not been updated since the dedication of right of way on the plat and the applicant should correct the lot area table.

Parking

City Code §125-86 requires a minimum of two (2) parking spaces per dwelling unit, each of which are enclosed in attached garages. The single family units will meet this requirement.

For the apartment buildings there is surface parking provided. The total number of outdoor stalls provided are 348, which is slightly over 2 stalls per dwelling unit. Additionally, there will be underground parking although it is unclear the number of stalls available. The ordinance requires 2 free parking stalls per apartment unit. Final parking numbers will need to be provided as part of any site plan review for the apartments.

Design Elements (Façade Materials)
The applicant has not provided any information regarding the single family detached housing nor architectural information for the apartment buildings.

Landscape & Tree Preservation Plan
The applicant has provided a tree preservation plan which depicts the area of existing vegetation, located in the south, adjacent to Falcon Avenue, along the southern lot line on the commercial property. The plans indicate all but 1% of the total 4.17 treed acres are being removed. The only area preserved is along the southern border of the site, adjacent to a ponding area. The ordinance permits up to 50% tree removal for development and therefore the applicant is required to provide 182 new trees. The applicants proposal includes installation of 139 new trees within the residential areas of the site, generally on the perimeter of development. Staff would have preferred the applicant make a more concerted effort to maintain some of the existing trees. This is an attractive section of the site and new development could benefit from maintaining some of the existing vegetation.

Landscaping for the residential project requires a minimum of one tree per dwelling unit.

Therefore 242 trees are required on the site along with the 182 replacement trees due to the removal of most site vegetation. In total the developer should be installing 424 new trees. The landscape plan show a total of 139 trees on the entire residential portion of the property which is unacceptable. The plans have little landscaping around any of the apartment buildings and additional plantings should occur along Falcon Avenue. Plantings should also be added around some of the ponding areas and there is the opportunity to create a landscape buffer between the residential portion of the site and the future commercial development. A revised landscape plan would be a condition of approval.

Project Phasing

The applicant has provided a phasing plan which indicates that Phase I includes 381st Lane and land to the north. This would mean that 31 single family homes would be in the first phase along with the 97 apartment units in 4 buildings. The ponding area in Outlot D will also be constructed. As noted above, there is not enough information to grant approvals of the apartment portion of the project and therefore additional city review will be needed to implement the first phase. The second phase would result in the remaining 44 single family units and 70 apartment units in 3 buildings. There is no phasing attributable to the commercial sites.

Access

All roadways through the Development are public streets, which are designed to standard street widths and rights of way, per the City's engineering and design standards. There are no required or proposed parking restrictions on the City streets at this time.

As noted, the primary access to the site is from 381st Lane, which will also provide access from the west to the new commercial area. This means that the roadway will have more traffic than would be anticipated for a typical residential street. The presence of the apartments, and the commercial, along with several of the single family lots, makes this road function more like a major collector. In discussions with the City Engineer, the proposed sizing and configuration of the road should serve anticipated traffic. If the traffic continues to increase, the city could prohibit parking along the road. Future residents should understand that this road will be extended into the adjoining commercial area. A sign noting the future extension should be placed at the end of the roadway. A cul de sac turnaround is required as part of that road construction.

The placement of the four roads into the site are based somewhat on existing conditions. The two northern roads, 381st Lane and 382nd Drive each form a 4-way intersection with the two existing roads across Falcon Avenue. The most southern road is not aligned with any existing road. In the east, Tanger Drive is set to the property line, and the proposal extends the road southward, consistent with the City's Transportation Plan. The road will act as a frontage road for the commercial businesses fronting along I-35. As presently proposed the horizontal curve proposed does not appear to meet State Aid standards and will need to be modified. Staff recognizes that the curve in the road is to address the existing wetlands, but Tanger Drive will be on the State Aid system and will need to meet State and City design criteria. Wetland impacts may be necessary to meet the design standards, recognizing the current terminus of the road in the north. The County, and the City concurs, that turn lanes are required at the entrances to the site. These should be shown on the final plans and approved by Chisago County and the City.

Of final note is the extension of Falk Ave along the southern border of the site. The plan shows the roadway pavement stopping short of the property line. The pavement should be extended to the lot line, and a temporary cul de sac be installed which will impact the buildability of the most southern lots.

Trails and Sidewalks

Sidewalks are proposed on both sides of 381st Lane and on one side of the ring road through the project and along both of the cul de sacs. There will also be a trail installed along Falcon Avenue at the applicants expense. The County noted that the pedestrian crossings at Falcon Avenue are not shown.

Wetlands

There was a previous wetland delineation done on the site which showed wetlands in the east, which would be impacted by the extension of Tanger Drive. A recent Delineation Report from 2024, found that the northern wetland continues to remain and is approximately 1.25 acres. The other previously designated wetlands did not meet all three characteristics of wetlands and have been removed from the wetland survey.

Utilities and Site Grading

The applicant has been working with the City Engineer on site utilities and grading. The Engineer has indicated most of the comments have been addressed although final plans have not been submitted. Final plans would occur during the final plat review process.

Signage

The applicant has not provided any signage information for the subdivision. Any future signage must comply with the ordinance and the applicant will need to obtain a sign permit.

Parks, Trails and Open Space

The Parks, Trails and Open Space Commission will review this at their May 5, 2025 meeting and their recommendation will be provided at the meeting.

4. **Plat Standards**

The developer appears to be meeting the R-3 detached single family dimensional standards found in the Dimensional & Design Standards Table. The applicant should provide information about each of the lot widths, and lot depths. No variances were requested, and it is not anticipated that any would be granted for the project, either for individual lots or for future construction.

| | Lot Width/ft | Depth/ft | Area/sf | Setbacks Front/fs | Side/ft | Rear corner/ft | Rear/ft | Height/ft | Min. Bldg. size |
|---|---|---|---|---|---|---|---|---|---|
| R3 | 50 | 100 | 6,500 | 30 | 6 | 15 | 30 | 35 | 800 sq ft |

**Staff Recommendation**

1. Staff requests the Planning Commission provide direction regarding the zoning ordinance language relating to single family development in the R3 zoning district.

2. Staff has identified several issues which should be addressed by the applicant prior to granting any approvals. Staff is recommending the application be continued to permit the applicant time to address the following issues:

1. Modify the landscape plan to significantly increase the plantings, including trees, shrubs, and grasses.
2. Provide information regarding the apartment project including building elevations, and detailed site plan information to ensure future development can comply with ordinance performance standards.
3. The applicant revise the Tanger Drive alignment to meet State Aid roadway design standards.
4. The applicant update lot information to, including lot width and depth of each single family lot and final parcel size of outlots E and F.
5. The applicant provide a cul de sac at the end of Obsidian Street and adjust the preliminary plat accordingly.
6. There are outstanding engineering items that have not been fully addressed from the City Engineers memo.

**Planning Commission Action**

After the public hearing and discussion, the Planning Commission could take one of the following actions:

1. Recommend approval with the conditions and findings of fact.
2. Recommend denial with findings of fact.
3. Table the request to the next Planning Commission meeting and provide direction to Staff and the applicant as to the additional information needed.

**Attachments**

1. Preliminary Plat Dated 04-24-2025
2. Civil Plans Dated 04-24-2025

**Voting Requirements:**

| | |
|---|---|
| **Voting Options** | **Simple Majority** |

**City of North Branch**
**Staff Report**

**Prepared By: Nathan Sondrol, Community Development Director, Ryan Saltis**

**Presenter: Nathan Sondrol, Community Development Director**

**Date: 06/05/2025**

**Board & Commission: Planning Commission**

**Subject: Consider Resolution R-198-2025 to approve the Cedar Ridge Preliminary Plat**

---

## Recommended City Council Action

Motion to approve a Preliminary Plat for the Cedar Ridge Community with conditions listed in the June 6, 2025 Engineer's Memo.

## Overview / Background

This request was first brought to the May 6, 2025 Planning Commission Meeting. The request for a Preliminary Plat was brought to the Planning Commission simultaneously with a request for approval of a Text Amendment to allow for single family homes within the R-3 High Density Zoning District. The approval for the Preliminary Plat was contingent on the allowance of single family homes in the R-3 District since property lines were platted to resemble single family parcels meeting minimum lot widths and depths under the R-3 District Dimensional and Design Standards. It was determined at this meeting that the Planning Commission would need more information and research of how the text amendment would impact other R-3 zoned parcels and recommended to deny the request to permit single family homes in the R-3 High Density Zoning District. Because of this motion, the preliminary plat for Cedar Ridge was also denied.

A work session was held on May 27th in which City staff presented R-3 research. From the research conducted, City staff does not foresee issues with allowing single family homes in the R-3 High Density District. It was also perceived from Planning Commission and City Council members in attendance that single family homes in the R-3 High Density District would conform to surrounding land uses from the vacant parcels available.

## Analysis of Issue(s)

Analysis of the Preliminary Plat can be found in the May 6th Planning Commission Meeting

Packet (attached) and City Engineer's Memo dated June 5, 2025.

**Recommended City Council Action**

Motion to approve Resolution R-198-2025 approving the Preliminary Plat for the Cedar Ridge Community.

**Voting Requirements:**

**Voting Options** **Simple Majority**

**STATE OF MINNESOTA**

**COUNTY OF CHISAGO**

**CITY OF NORTH BRANCH**

## CITY COUNCIL RESOLUTION NO. R-198-2025

**A RESOLUTION APPROVING THE CEDAR RIDGE COMMUNITY PRELIMINARY PLAT**

WHEREAS, the Applicant, Cedar Ridge Community, LLC, applied for a preliminary plat approval; and

WHEREAS, the property is legally described as Outlot C and Outlot D, North Branch Meadows; and
WHEREAS, the developing area of the subdivision was guided for a mixture of High Density Residential and Business use in the Comprehensive Plan; and

WHEREAS, the developing area of the subdivision was zoned for High Density Residential and Business use on the zoning map; and,

WHEREAS, on April 24, 2025, after being published and mailed notice in accordance with Minnesota Statutes and the City Code, the Planning Commission held a public hearing, at which time all persons desiring to be heard concerning this application were given the opportunity to speak thereon; and

WHEREAS, on May 6, 2025, at an official public hearing, the Planning Commission considered the applicant's submission, the contents of the staff report, public testimony, and other evidence available to the Commission; and

WHEREAS, on May 6, 2025, the Planning Commission unanimously recommended denial of the Preliminary Plat; and,

WHEREAS, on June 10, 2025, the City Council considered the requested preliminary plat and how it might affect public health, safety, or welfare and found that the project will not negatively impact the public health, safety, or welfare.

NOW THEREFORE, BE IT RESOLVED BY THE NORTH BRANCH CITY COUNCIL OF NORTH BRANCH, MINNESOTA, HEREBY APPROVES THE REQUESTED PRELIMINARY PLAT FOR CEDAR RIDGE COMMUNITY BASED ON THE FOLLOWING FINDINGS OF FACT:

1. Single family housing is a permitted use in the R-3 zoning district (66-6 Zoning District-Use Table) and therefore the preliminary plat is consistent with the Zoning Ordinance.
2. The preliminary plat as presented will meet R-3 Density requirements of 6+ units per acre.

3. The preliminary plat will meet minimums found in the Dimensional and Design Standards Table.

BE IT FURTHER RESOLVED BY THE NORTH BRANCH CITY COUNCIL OF NORTH BRANCH, MINNESOTA, HEREBY APPROVES THE REQUESTED PRELIMINARY PLAT FOR CEDAR RIDGE COMMUNITY BASED ON THE FOLLOWING CONDITIONS:
1. The Applicant shall work with the Engineer to address any Engineering concerns or revisions provided in the Engineering memo dated June 5, 2025.
2. The Owner shall seek Final Plat approval within six (6) months from the date of Preliminary Plat approval for Cedar Ridge Community.
3. Title work for the Plat shall be provided to and conform to any requirements resulting from City staff and the City Attorney's review of the title work and plat opinion.
4. Owner shall enter into and execute a Development Agreement with the City governing the Development in conjunction with City approvals of which said Development Agreement shall outline the terms and conditions and financial obligations of the Owner for the Development as stated below.
5. Owner shall pay to the City all applicable fees and expenses incurred by the City as related to the Development.
6. Except as otherwise expressly authorized by City resolution or ordinance, all aspects of the Development shall comply with all applicable state laws and city codes, ordinance, and regulations.

**BE IT FURTHER RESOLVED,** the Owner shall be responsible, at Owner expense, for all public improvements as outlined in the Development Agreement and Approved Plans for the Development, and constructed according to the City's engineering and design standards.

Passed by the City Council of North Branch, Minnesota this 10th day of June, 2025.

_____

Kevin A. Schieber, Mayor

Attested:

_____

Matthew A. Hill, City Administrator

# Preliminary Plat of CEDAR RIDGE COMMUNITY

## CITY OF NORTH BRANCH
## CHISAGO COUNTY, MN

**SOILS CHART**

| Map symbol & soil name | Hydrologic group | Water table depth (in) |
|---|---|---|
| 676B: Kost loamy fine sand, 1 to 6 percent slopes | A | >80 |
| 328B: Sartell fine sand, 1 to 6 percent slopes | A | >80 |
| 161: Isanti loamy fine sand | A/D | >80 |
| 162: Lino loamy fine sand | A/D | 12 |

* Data from USDA Web Soil Survey

**SOIL BORING LOG** Matthew J. Blesi – MPCA Cert. No. C4952

| Soil Boring # | Elevation | Mottling | Elev. of Mottled Soil |
|---|---|---|---|
| Soil Boring 1 | 1065.2 | None to 156" | N/A |
| Soil Boring 2 | 1064.5 | None to 111" | N/A |
| Soil Boring 3 | 1065.2 | None to 150" | N/A |
| Soil Boring 4 | 1064.5 | None to 128" | N/A |

***Proposed Plat Description:***
*Outlot C and Outlot D, NORTH BRANCH MEADOWS, Chisago County, Minnesota.*

***Survey Notes:***

1. *This survey was performed without the benefit of an updated title report. No additional search for restrictions or easements was made by the surveyor. We reserve the right to update this survey upon receipt of updated title documentation. Reference Title Commitment No. MN22255 dated 12–14–21.*
2. *Portions of woods edge and field edge were digitized from Autodesk Civil 3D 2020 online aerial imagery and are for reference purposes only.*
3. *Utilities shown per Gopher State One Call Ticket No. 220530468 and 250220710. Not all utilities may have been located. Multiple tickets failed to result in the East Central Energy transmission line being marked.*
4. *Contours were created using GPS RTK methods (NAVD 88).*
5. *Subject property is NOT part of a shoreland district or within a flood plain district as mapped by FEMA.*
6. *Topography and site improvements were collected 3/7/22.*
7. *Wetlands were previously delineated by Midwest Natural Resources, Inc. in 2018 for the plat of NORTH BRANCH MEADOWS and are shown hereon. A more recent delineation was completed by Bogart, Pederson and Assocaites, Inc. on 10/17/24.*
8. *There is an existing underground electric transmission line currently owned by East Central Energy that follows the general path of the overhead power line along the common line of Outlots C and D of NORTH BRANCH MEADOWS. The overhead power lines are owned by Southern Municipal Power Agency. The power lines existed on the date of the plat recording, but no easement was dedicated. We have tried to contact the Southern Minnesota Municipal Power Agency for a partial release, but have not received a response.*
9. *East Central Energy's underground transmission line may be impacted by the proposed infiltration basin and may need to be consulted with East Central Energy.*

I hereby certify that a boundary survey has been completed for the preliminary plat of CEDAR RIDGE COMMUNITY, Chisago County, Minnesota.

Signed: Craig Wensmann
Craig A. Wensmann
Date: 1/14/25 Lic. No. 47466

| LINE | BEARING | DISTANCE |
|---|---|---|
| L1 | S76°35'28"E | 78.76 |

| CURVE | RADIUS | DISTANCE | DELTA |
|---|---|---|---|
| C1 | 500.00 | 41.37 | 4°44'26" |

**LOT AREAS**

| Block | Lot | Total Lot Area (S.F.) | Block | Lot | Total Lot Area (S.F.) | Block | Lot | Total Lot Area (S.F.) | Block | Lot | Total Lot Area (S.F.) |
|---|---|---|---|---|---|---|---|---|---|---|---|
| 1 | 1 | 12,833 | 1 | 20 | 21,507 | 3 | 7 | 14,022 | 4 | 4 | 8,567 |
| 1 | 2 | 9,038 | 1 | 21 | 14,351 | 3 | 8 | 17,095 | 4 | 5 | 9,042 |
| 1 | 3 | 7,998 | 1 | 22 | 16,415 | 3 | 9 | 13,794 | 4 | 6 | 8,960 |
| 1 | 4 | 7,436 | 1 | 23 | 13,515 | 3 | 10 | 14,502 | 4 | 7 | 7,910 |
| 1 | 5 | 7,916 | 1 | 24 | 8,249 | 3 | 11 | 10,950 | 4 | 8 | 7,538 |
| 1 | 6 | 14,965 | 1 | 25 | 7,891 | 3 | 12 | 7,374 | 4 | 9 | 7,538 |
| 1 | 7 | 14,622 | 1 | 26 | 8,071 | 3 | 13 | 6,760 | 4 | 10 | 7,539 |
| 1 | 8 | 16,240 | 1 | 27 | 8,289 | 3 | 14 | 9,331 | 4 | 11 | 17,825 |
| 1 | 9 | 17,979 | 1 | 28 | 8,507 | 3 | 15 | 12,660 | 4 | 12 | 80,409 |
| 1 | 10 | 12,094 | 1 | 29 | 8,726 | 3 | 16 | 6,956 | 5 | 1 | 13,646 |
| 1 | 11 | 12,775 | 1 | 30 | 8,944 | 3 | 17 | 6,760 | 5 | 2 | 9,100 |
| 1 | 12 | 7,384 | 1 | 31 | 14,124 | 3 | 18 | 6,760 | 5 | 3 | 9,100 |
| 1 | 13 | 7,384 | 2 | 1 | 75,136 | 3 | 19 | 6,760 | 5 | 4 | 9,100 |
| 1 | 14 | 7,384 | 2 | 2 | 64,230 | 3 | 20 | 6,760 | 5 | 5 | 9,098 |
| 1 | 15 | 7,384 | 2 | 3 | 46,390 | 3 | 21 | 15,980 | 5 | 6 | 8,986 |
| 1 | 16 | 9,122 | 2 | 4 | 76,289 | 3 | 22 | 106,428 | 5 | 7 | 8,583 |
| 1 | 17 | 12,242 | 3 | 1 | 10,104 | 4 | 1 | 7,540 | 5 | 8 | 7,966 |
| 1 | 18 | 18,519 | 3 | 2 | 6,760 | 4 | 2 | 7,540 | 5 | 9 | 7,348 |
| 1 | 19 | 14,682 | 3 | 3 | 10,188 | 4 | 3 | 7,540 | 5 | 10 | 6,926 |
| 1 | 20 | 21,507 | 3 | 4 | 22,714 | Outlot B | | 27,216 | 5 | 11 | 6,769 |
| 1 | 21 | 14,351 | 3 | 5 | 13,274 | Outlot C | | 13,319 | 5 | 12 | 10,010 |
| Outlot A | | 60,907 | 3 | 6 | 14,011 | Outlot D | | 131,699 | Outlot E | | 925,504 |

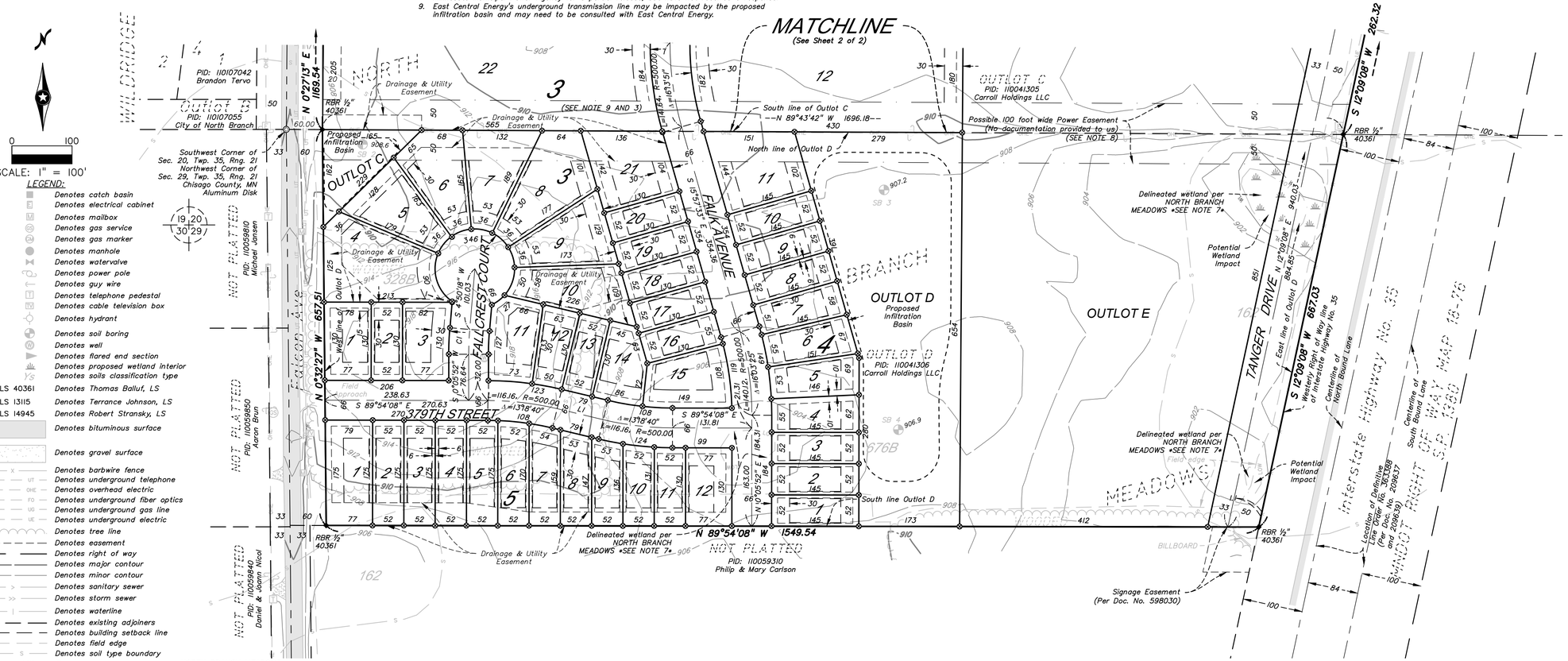


**LEGEND:**

- Denotes catch basin
- Denotes electrical cabinet
- Denotes mailbox
- Denotes gas service
- Denotes gas marker
- Denotes manhole
- Denotes watervalve
- Denotes power pole
- Denotes guy wire
- Denotes telephone pedestal
- Denotes cable television box
- Denotes hydrant
- Denotes soil boring
- Denotes well
- Denotes flared end section
- Denotes proposed wetland interior
- Denotes soils classification type
- LS 40361 — Denotes Thomas Balluf, LS
- LS 13115 — Denotes Terrance Johnson, LS
- LS 14945 — Denotes Robert Stransky, LS
- Denotes bituminous surface
- Denotes gravel surface
- Denotes barbwire fence
- Denotes underground telephone
- Denotes overhead electric
- Denotes underground fiber optics
- Denotes underground gas line
- Denotes underground electric
- Denotes tree line
- Denotes easement
- Denotes right of way
- Denotes major contour
- Denotes minor contour
- Denotes sanitary sewer
- Denotes storm sewer
- Denotes waterline
- Denotes existing adjoiners
- Denotes building setback line
- Denotes field edge
- Denotes soil type boundary
- Denotes delineated wetland per NORTH BRANCH MEADOWS
- Denotes proposed wetland edge

VICINITY MAP
Sec. 20 & 29, Twp. 35, Rng. 21
Chisago County, MN

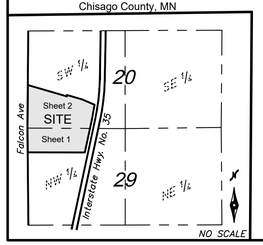


Bearings are based on the plat of NORTH BRANCH MEADOWS

- ● Denotes found iron monument
- ⊗ Denotes ½ inch by 14 inch iron monument with a plastic plug stamped R.L.S. 47466 to be set within one year of platting date
- ◆ Denotes found rebar
- ◎ Denotes found metal disk
- ○ Denotes set ½ inch by 14 inch iron monument with a plastic plug stamped R.L.S. 47466
- △ Denotes found large nail

**REFERENCE BENCHMARK:**
MNDOT Geodetic Monument "DANY"
Elevation = 897.37 feet (NAVD 88)

**PLAT BENCHMARK:**
Top nut hydrant in the NW quad of Falcon Ave. and 382nd Drive
Elevation = 915.28 feet (NAVD 88)

**OWNER:**
Carroll Holdings, LLC
33098 Marmon St. NE
Cambridge MN, 55008

**DEVELOPER:**
Cedar Ridge Community LLC
12222 313th Avenue,
Princeton, MN 55371
(763) 360–1453

**SURVEYORS & ENGINEERS:**
Bogart, Pederson & Associates, Inc.
13076 First Street
Becker, MN 55308–9322
763–262–8822

**TOTAL AREA:** 62.03± Acres

**EXISTING ZONING:**
R–3 High Density Residential
B – Business

**PROPOSED ZONING:**
R–3 High Density Residential (Residential Lots)
B – Business (Outlots)

**MINIMUMS:**
100' Depth
50' Width
6,500 S.F. lot size

**DENOTES BUILDING SETBACKS:**
Detached Single Family Lots
30' Front
6' Side (Interior)
30' Rear (Interior)
15' Rear (Corner)
30' Front (Corner)
20' Wetland

Drainage and Utility Easements are shown thus:

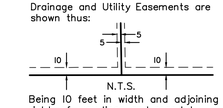


Being 10 feet in width and adjoining right–of–way lines and rear lot lines, also being 5 feet in width and adjoining lot lines, unless otherwise indicated, as shown on plat.

DATE: 1/10/25
FIELD DATE: March, 7th 2022
BK/PG: 13.1/pg. 1
DRAWN BY: CK
CHECKED BY: CAW/DJJ
DWG FILE: 22–0030.02 Prelim
FILE NO: 22–0030.02

REVISIONS:
3/31/25: City Comments
4/24/25: City Comments
5/27/25: City Comments
6/6/25: City Comments

I hereby certify that this survey, plan, or report was prepared by me or under my direct supervision and that I am a duly Licensed Land Surveyor under the laws of the State of Minnesota.

Signed: Craig Wensmann
Craig A. Wensmann
Date: 1/14/25 Lic. No. 47466


**BOGART, PEDERSON & ASSOCIATES, INC.**
LAND SURVEYING
CIVIL ENGINEERING
MAPPING
13076 FIRST STREET, BECKER, MN 55308–9322
TEL: 763–262–8822 FAX: 763–262–8844


PRELIMINARY PLAT
for
CEDAR RIDGE COMMUNITY
Cedar Ridge Community LLC
City of North Branch
Chisago County, MN

**BOGART, PEDERSON & ASSOCIATES, INC.**

# Preliminary Plat of CEDAR RIDGE COMMUNITY

**CITY OF NORTH BRANCH**
**CHISAGO COUNTY, MN**

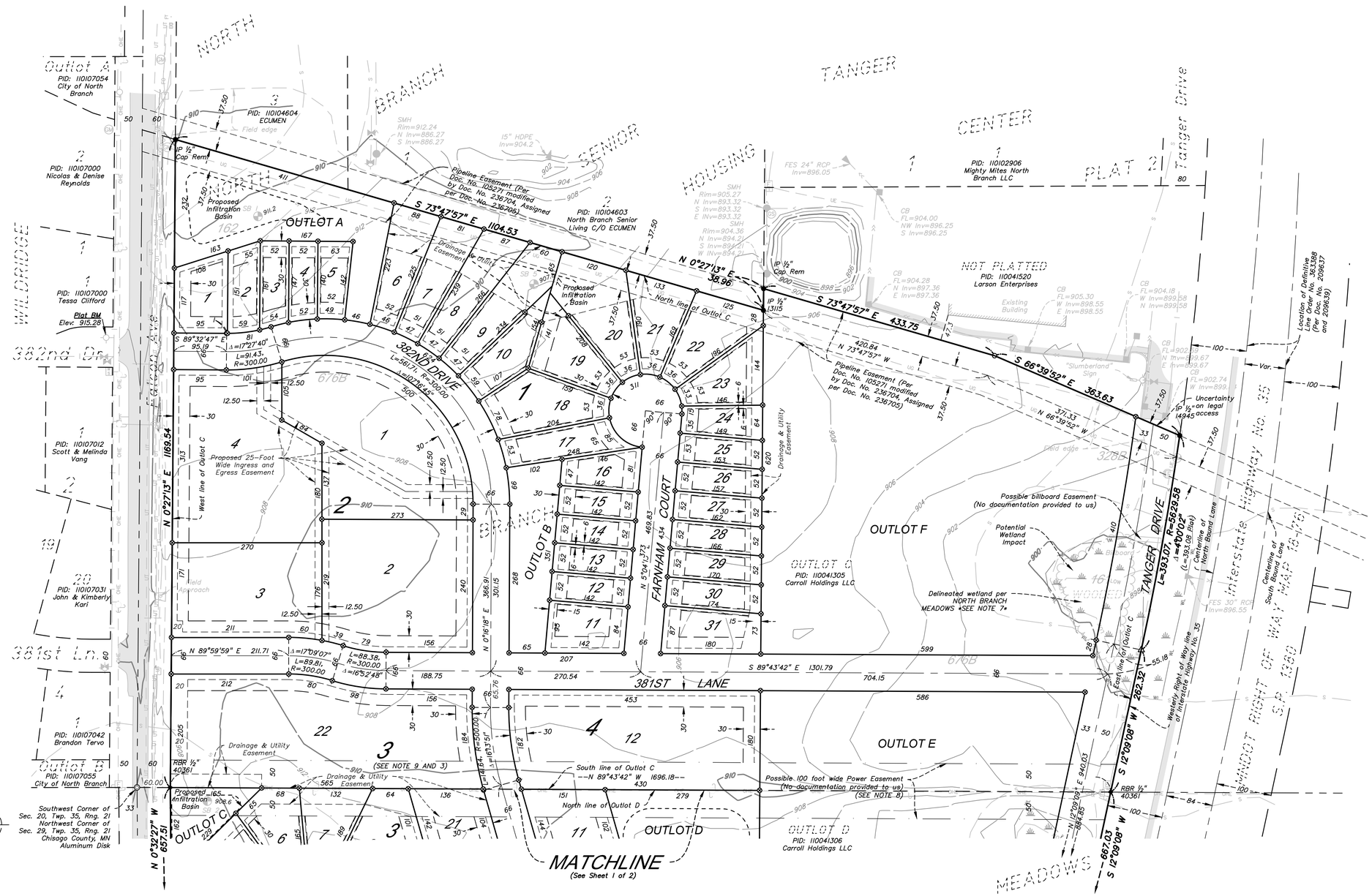


## VICINITY MAP

Sec. 20 & 29, Twp. 35, Rng. 21
Chisago County, MN

## LEGEND:

- Denotes catch basin
- Denotes electrical cabinet
- Denotes mailbox
- Denotes gas service
- Denotes gas marker
- Denotes manhole
- Denotes watervalve
- Denotes power pole
- Denotes guy wire
- Denotes telephone pedestal
- Denotes cable television box
- Denotes hydrant
- Denotes soil boring
- Denotes well
- Denotes flared end section
- Denotes proposed wetland interior
- Denotes soils classification type
- LS 40361 — Denotes Thomas Balluf, LS
- LS 13115 — Denotes Terrance Johnson, LS
- LS 14945 — Denotes Robert Stransky, LS
- Denotes bituminous surface
- Denotes gravel surface
- Denotes barbwire fence
- Denotes underground telephone
- Denotes overhead electric
- Denotes underground fiber optics
- Denotes underground gas line
- Denotes easement
- Denotes right of way
- Denotes major contour
- Denotes minor contour
- Denotes sanitary sewer
- Denotes storm sewer
- Denotes waterline
- Denotes existing adjoiners
- Denotes building setback line
- Denotes field edge
- Denotes soil type boundary
- Denotes delineated wetland per NORTH BRANCH MEADOWS
- Denotes proposed wetland edge
- Denotes underground electric
- Denotes tree line

**BOGART, PEDERSON & ASSOCIATES, INC.**

Bearings are based on the plat of NORTH BRANCH MEADOWS

- ● Denotes found iron monument
- ⊗ Denotes ½ inch by 14 inch iron monument with a plastic plug stamped R.L.S. 47466 to be set within one year of platting date
- ◆ Denotes found rebar
- ◎ Denotes found metal disk
- ○ Denotes set ½ inch by 14 inch iron monument with a plastic plug stamped R.L.S. 47466
- △ Denotes found large nail

**REFERENCE BENCHMARK:**
MNDOT Geodetic Monument "DANY"
Elevation = 897.37 feet (NAVD 88)

**PLAT BENCHMARK:**
Top nut hydrant in the NW quad of Falcon Ave. and 382nd Drive
Elevation = 915.28 feet (NAVD 88)

**OWNER:**
Carroll Holdings, LLC
33098 Marmon St. NE
Cambridge MN, 55008

**DEVELOPER:**
Cedar Ridge Community LLC
12222 313th Avenue,
Princeton, MN 55371
(763) 360-1453

**SURVEYORS & ENGINEERS:**
Bogart, Pederson & Associates, Inc.
13076 First Street
Becker, MN 55308-9322
763-262-8822

**TOTAL AREA:** 62.03± Acres

**EXISTING ZONING:**
R-3 High Density Residential
B - Business

**PROPOSED ZONING:**
R-3 High Density Residential (Residential Lots)
B - Business (Outlots)

**MINIMUMS:**
100' Depth
50' Width
6,500 S.F. lot size

**DENOTES BUILDING SETBACKS:**
Detached Single Family Lots
30' Front
6' Side (Interior)
30' Rear (Interior)
15' Rear (Corner)
30' Front (Corner)
20' Wetland

Drainage and Utility Easements are shown thus:

N.T.S.

Being 10 feet in width and adjoining right-of-way lines and rear lot lines, also being 5 feet in width and adjoining lot lines, unless otherwise indicated, as shown on plat.

DATE: 1/10/25
FIELD DATE: March, 7th 2022
BK/PG: 13.1/pg. 1
DRAWN BY: CK
CHECKED BY: CAW/DJJ
DWG FILE: 22-0030.02 Prelim
FILE NO: 22-0030.02

REVISIONS:
3/31/25: City Comments
4/24/25: City Comments
5/27/25: City Comments
6/6/25: City Comments

I hereby certify that this survey, plan, or report was prepared by me or under my direct supervision and that I am a duly Licensed Land Surveyor under the laws of the State of Minnesota.

Signed: Craig Wensmann
Craig A. Wensmann
Date: 1/14/25 Lic. No. 47466

**BOGART, PEDERSON & ASSOCIATES, INC.**
LAND SURVEYING
CIVIL ENGINEERING
MAPPING
13076 FIRST STREET, BECKER, MN 55308-9322
TEL: 763-262-8822 FAX: 763-262-8844

PRELIMINARY PLAT
for
CEDAR RIDGE COMMUNITY
Cedar Ridge Community LLC
City of North Branch
Chisago County, MN

**City of North Branch**
**Staff Report**

**Prepared By: Nathan Sondrol, Community Development Director**

**Presenter: Nathan Sondrol, Community Development Director**

**Date: 04/29/2025**

**Board & Commission: Planning Commission**

**Subject: Public Hearing to Consider Requests for a preliminary plat for Cedar Ridge Community and a zoning text amendment to clarify single family homes a permitted use in the R-3 Zoning District**

---

## Applicants Request

1. Text Amendment for Section 66-6, Zoning Districts-Use Table; R3 Dwelling, Single-Family change to permitted use.
2. Preliminary plat approval for Cedar Ridge Community

## Overview / Background

There are two parts to this application, one being a zoning text amendment and the other a preliminary plat review. The text amendment is being processed to address the ambiguity in the current ordinance relating to R3 uses. The land use table specifically omits single family dwellings from the R3 zoning district, while the Dimensional and Design Standards Table specifically includes small detached single family lot dimensional requirements. The Commission and Council should determine if single family is an appropriate use in the R3 zoning district given that the district is a high density residential district and single family, typically a low density use, may not be appropriate. As currently provided, the dimensional standards for the R3 are not traditional standards and permit small lots of 50’ in width and a minimum lot size of 6500 square feet.

The 62 acre parcel is being subdivided to create 75 small lot single family home sites, 3 lots for future apartment development (167 units in total), and 7 outlots which will be for future commercial development or stormwater ponding depending upon the location of the parcel.

At present the applicant is proposing construction of the single family homes with necessary infrastructure. Phase I also includes some apartment buildings however, little information is

available for that portion of the project. To the east, Outlots E and F will be replatted for commercial development. There is no information available about lot layout or future users. The main access into the site is through the extension of 381st Lane which will provide access to all apartments and the commercial lots as well as single family units. The other western access is 382nd Drive turning into Falk Avenue which winds through the project providing access to individual lots and functioning like a neighborhood collector road. Two cul de sacs, Fallcrest Court and Farnham Court, also provide access for individual single family lots. Tanger Drive right of way is being provided; running along the eastern edge of the site to provide a southward road extension which will function as a frontage road for the commercial along I-35. There is a curve in the road in the north, to bypass an existing wetland.

There are a variety of issues associated with the project which are enumerated in the information below. One of the main concerns of staff is the areas not being developed as single family. It is unclear what the final product will be on these sites and if the platted properties can adequately accommodate needed parking and building area while meeting setbacks, open space and other performance standards.

**Attachments**

**Issue(s) to Consider**

1. Zoning Ordinance Text Amendment
2. Land Use and Zoning
3. Development Plan
4. Plat Standards

**Analysis of Issue(s)**

1. **Zoning Ordinance Text Amendment**

The Commission and Council are being asked to amend the zoning ordinance to address an inconsistency between the various sections of the Code. In the zoning Districts Use Table Section 6-66, under the Dwelling, Single Family row there is nothing listed in the R3 zoning district, meaning it is not permitted. The Dimensional & Design Standards Table provides regulations for R-3 detached single family, implying this use is permitted by ordinance. To accommodate the higher density uses of the R-3 zoning, the table allows for small lot single family, whereas the lot width is a minimum of 50 feet and the lot dept is 100 feet and the minimum lot size is 6,500 square feet, a little over half the size of R-1 single family lots.

Staff is looking for direction from the Commission and Council on this question. If it is

determined that the R-3 should not allow single family detached lots as one of the unit types, the project could not be approved. If the Commission and Council determine that the R-3 zoning district is an appropriate location for small lot single family, the project could continue to move forward, pending successfully addressing all project issues.

In the recent past, the City Council has expressed some concern about small lot single family development, particularly when achieved through a PUD. Use of the R-3 to permit some small lot development may allow higher density, without requiring only apartments. Further, this may be a solution to direct future developers to the R-3 district for smaller lots rather than granting modifications to detached single family lots in the R-1 or R-2 zoning districts.

2. **Land Use & Zoning**

The adopted Comprehensive Plan designates the site into two different land uses. The eastern section of the site is designated LUB-Business with the western section designed LUR-3 High Density Residential. The High Density Residential designation is for development of over 6 dwelling units per acre. In order to achieve the required density, the property must combine the proposed single family development with a higher density product, like the anticipated apartment buildings.

The zoning map is similar in the split of the two land uses with Business in the east, along I-35 and R-3 High Density Residential in the west. The map defines a line between the two uses although it is unclear if the exact location of the land use split must define the change between residential and commercial uses. Below is an overlay of the zoning map on the site. It shows that a portion of the commercial zoning overlaps the single family on the north and also includes portions of the drainage pond needed for the residential development.

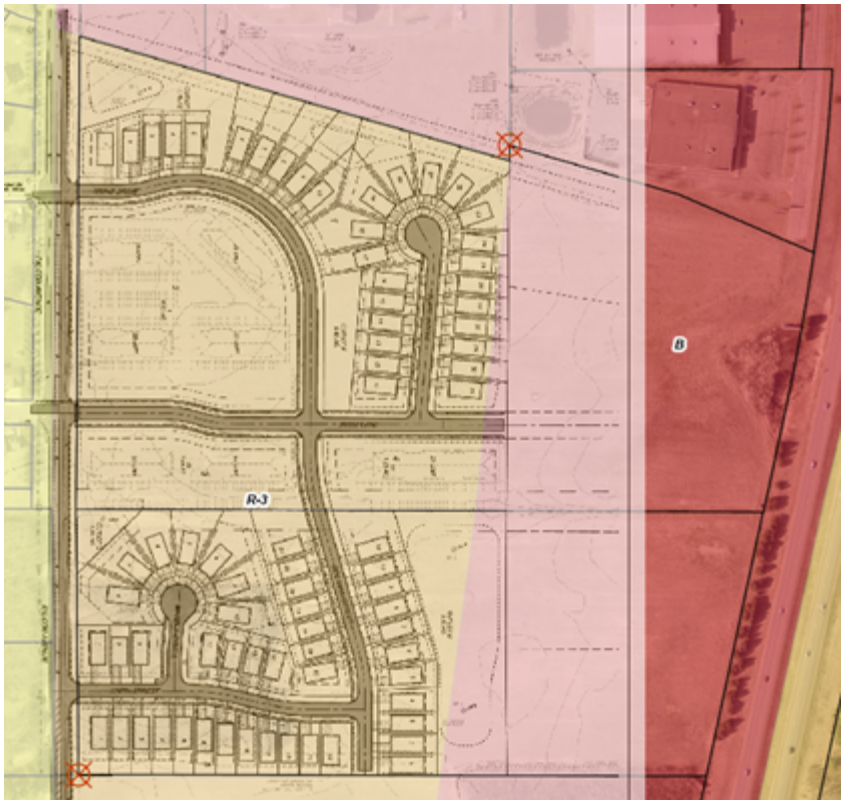


Generally, staff wants to ensure that the amount of land available for commercial is reasonably sized and has dimensional attributes that can accommodate future commercial development without the need of variance. For that reason, staff had requested, and not received, a concept plan which could illustrate a reasonably size non-residential use on the approximate 21 acres designated for commercial development.

3. **Development Overview**

General Plan

The project is comprised of three different land uses. There is the 75 detached single family development located within the R3 zoned area. Many of the lots are located in the western portion of the site with some adjacent to Falcon Avenue, a busy Major Collector road. There is ponding in the northwest also adjacent to Falcon Avenue providing some separation from the traffic, and there is additional pond in the southern single family neighborhood also against the road. It appears that the building pad sites are at a similar elevation to Falcon Avenue meaning there is little ability to create a berm for buffering. The lots immediately adjacent to Falcon Avenue do have larger setbacks, increasing the separation between the road and the building footprint. The landscape plans illustrate more trees along Falcon Avenue providing some screening and it is recommended substantially more plantings be added. For example, Lot 1 Block 5 has 4 trees which equates to 1 tree every 43' along the side of the lot.

The second land use type is multi-family apartments. The applicant illustrates a total of 167

apartment dwelling units within seven different buildings. There are two located south and west of Falk Avenue and 381st Lane and one 30 unit building east of Falk Avenue. There are an additional four buildings located in the space between Falcon Avenue and the ring road of 382nd Drive. Aside from the building outline and parking lots the applicant has not provided any information about the apartment buildings or landscaping. Any approval for this project would not include formal approval of the apartments and additional applications will be required in the future. However, residents should expect multi-family development in these area. The density for this apartment portion of the project is 16.2 units/acre (167 units/10.3 acres). The total density for the residential portion of the site is 6.29 units/acre, slightly over the "6 and above" density standard.

The third land use is designated for business and commercial uses, consistent with other uses anticipated along I-35, a high traffic and visibility corridor. Aside from the dedication of the Tanger Road right of way and the recognition that 381st Lane will provide access into the commercial area there is little known. The site is a commercial area comprised of outlots E and F which total approximately 21 acres. The calculation has not been updated since the dedication of right of way on the plat and the applicant should correct the lot area table.

Parking

City Code §125-86 requires a minimum of two (2) parking spaces per dwelling unit, each of which are enclosed in attached garages. The single family units will meet this requirement.

For the apartment buildings there is surface parking provided. The total number of outdoor stalls provided are 348, which is slightly over 2 stalls per dwelling unit. Additionally, there will be underground parking although it is unclear the number of stalls available. The ordinance requires 2 free parking stalls per apartment unit. Final parking numbers will need to be provided as part of any site plan review for the apartments.

Design Elements (Façade Materials)
The applicant has not provided any information regarding the single family detached housing nor architectural information for the apartment buildings.

Landscape & Tree Preservation Plan
The applicant has provided a tree preservation plan which depicts the area of existing vegetation, located in the south, adjacent to Falcon Avenue, along the southern lot line on the commercial property. The plans indicate all but 1% of the total 4.17 treed acres are being removed. The only area preserved is along the southern border of the site, adjacent to a ponding area. The ordinance permits up to 50% tree removal for development and therefore the applicant is required to provide 182 new trees. The applicants proposal includes installation of 139 new trees within the residential areas of the site, generally on the perimeter of development. Staff would have preferred the applicant make a more concerted effort to maintain some of the existing trees. This is an attractive section of the site and new development could benefit from maintaining some of the existing vegetation.

Landscaping for the residential project requires a minimum of one tree per dwelling unit.

Therefore 242 trees are required on the site along with the 182 replacement trees due to the removal of most site vegetation. In total the developer should be installing 424 new trees. The landscape plan show a total of 139 trees on the entire residential portion of the property which is unacceptable. The plans have little landscaping around any of the apartment buildings and additional plantings should occur along Falcon Avenue. Plantings should also be added around some of the ponding areas and there is the opportunity to create a landscape buffer between the residential portion of the site and the future commercial development. A revised landscape plan would be a condition of approval.

Project Phasing

The applicant has provided a phasing plan which indicates that Phase I includes 381st Lane and land to the north. This would mean that 31 single family homes would be in the first phase along with the 97 apartment units in 4 buildings. The ponding area in Outlot D will also be constructed. As noted above, there is not enough information to grant approvals of the apartment portion of the project and therefore additional city review will be needed to implement the first phase. The second phase would result in the remaining 44 single family units and 70 apartment units in 3 buildings. There is no phasing attributable to the commercial sites.

Access

All roadways through the Development are public streets, which are designed to standard street widths and rights of way, per the City's engineering and design standards. There are no required or proposed parking restrictions on the City streets at this time.

As noted, the primary access to the site is from 381st Lane, which will also provide access from the west to the new commercial area. This means that the roadway will have more traffic than would be anticipated for a typical residential street. The presence of the apartments, and the commercial, along with several of the single family lots, makes this road function more like a major collector. In discussions with the City Engineer, the proposed sizing and configuration of the road should serve anticipated traffic. If the traffic continues to increase, the city could prohibit parking along the road. Future residents should understand that this road will be extended into the adjoining commercial area. A sign noting the future extension should be placed at the end of the roadway. A cul de sac turnaround is required as part of that road construction.

The placement of the four roads into the site are based somewhat on existing conditions. The two northern roads, 381st Lane and 382nd Drive each form a 4-way intersection with the two existing roads across Falcon Avenue. The most southern road is not aligned with any existing road. In the east, Tanger Drive is set to the property line, and the proposal extends the road southward, consistent with the City's Transportation Plan. The road will act as a frontage road for the commercial businesses fronting along I-35. As presently proposed the horizontal curve proposed does not appear to meet State Aid standards and will need to be modified. Staff recognizes that the curve in the road is to address the existing wetlands, but Tanger Drive will be on the State Aid system and will need to meet State and City design criteria. Wetland impacts may be necessary to meet the design standards, recognizing the current terminus of the road in the north. The County, and the City concurs, that turn lanes are required at the entrances to the site. These should be shown on the final plans and approved by Chisago County and the City.

Of final note is the extension of Falk Ave along the southern border of the site. The plan shows the roadway pavement stopping short of the property line. The pavement should be extended to the lot line, and a temporary cul de sac be installed which will impact the buildability of the most southern lots.

Trails and Sidewalks

Sidewalks are proposed on both sides of 381st Lane and on one side of the ring road through the project and along both of the cul de sacs. There will also be a trail installed along Falcon Avenue at the applicants expense. The County noted that the pedestrian crossings at Falcon Avenue are not shown.

Wetlands

There was a previous wetland delineation done on the site which showed wetlands in the east, which would be impacted by the extension of Tanger Drive. A recent Delineation Report from 2024, found that the northern wetland continues to remain and is approximately 1.25 acres. The other previously designated wetlands did not meet all three characteristics of wetlands and have been removed from the wetland survey.

Utilities and Site Grading

The applicant has been working with the City Engineer on site utilities and grading. The Engineer has indicated most of the comments have been addressed although final plans have not been submitted. Final plans would occur during the final plat review process.

Signage

The applicant has not provided any signage information for the subdivision. Any future signage must comply with the ordinance and the applicant will need to obtain a sign permit.

Parks, Trails and Open Space

The Parks, Trails and Open Space Commission will review this at their May 5, 2025 meeting and their recommendation will be provided at the meeting.

4. **Plat Standards**

The developer appears to be meeting the R-3 detached single family dimensional standards found in the Dimensional & Design Standards Table. The applicant should provide information about each of the lot widths, and lot depths. No variances were requested, and it is not anticipated that any would be granted for the project, either for individual lots or for future construction.

| | Lot Width/ft | Depth/ft | Area/sf | Setbacks Front/fs | Side/ft | Rear corner/ft | Rear/ft | Height/ft | Min. Bldg. size |
|---|---|---|---|---|---|---|---|---|---|
| R3 | 50 | 100 | 6,500 | 30 | 6 | 15 | 30 | 35 | 800 sq ft |

**Staff Recommendation**

1. Staff requests the Planning Commission provide direction regarding the zoning ordinance language relating to single family development in the R3 zoning district.

2. Staff has identified several issues which should be addressed by the applicant prior to granting any approvals. Staff is recommending the application be continued to permit the applicant time to address the following issues:

1. Modify the landscape plan to significantly increase the plantings, including trees, shrubs, and grasses.
2. Provide information regarding the apartment project including building elevations, and detailed site plan information to ensure future development can comply with ordinance performance standards.
3. The applicant revise the Tanger Drive alignment to meet State Aid roadway design standards.
4. The applicant update lot information to, including lot width and depth of each single family lot and final parcel size of outlots E and F.
5. The applicant provide a cul de sac at the end of Obsidian Street and adjust the preliminary plat accordingly.
6. There are outstanding engineering items that have not been fully addressed from the City Engineers memo.

**Planning Commission Action**

After the public hearing and discussion, the Planning Commission could take one of the following actions:

1. Recommend approval with the conditions and findings of fact.
2. Recommend denial with findings of fact.
3. Table the request to the next Planning Commission meeting and provide direction to Staff and the applicant as to the additional information needed.

**Attachments**

1. Preliminary Plat Dated 04-24-2025
2. Civil Plans Dated 04-24-2025

**Voting Requirements:**

| | |
|---|---|
| **Voting Options** | **Simple Majority** |

# CEDAR RIDGE COMMUNITY LLC

# CEDAR RIDGE COMMUNITY

## FALCON AVE N

## CITY OF NORTH BRANCH, CHISAGO COUNTY, MN

## MAY, 2025

## PRELIMINARY PLANS

### CIVIL & SURVEY PLANS PREPARED BY:


Bogart, Pederson
& Associates, Inc.
CIVIL ENGINEERING
LAND SURVEYING
ENVIRONMENTAL SERVICES
*Traditional Values · Creative Solutions*


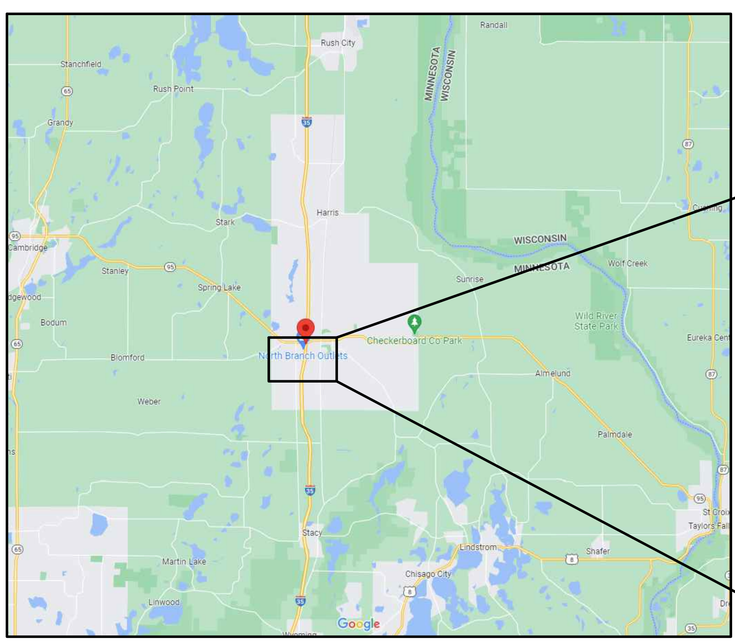


**CHISAGO COUNTY, MINNESOTA**

**PROJECT LOCATION**

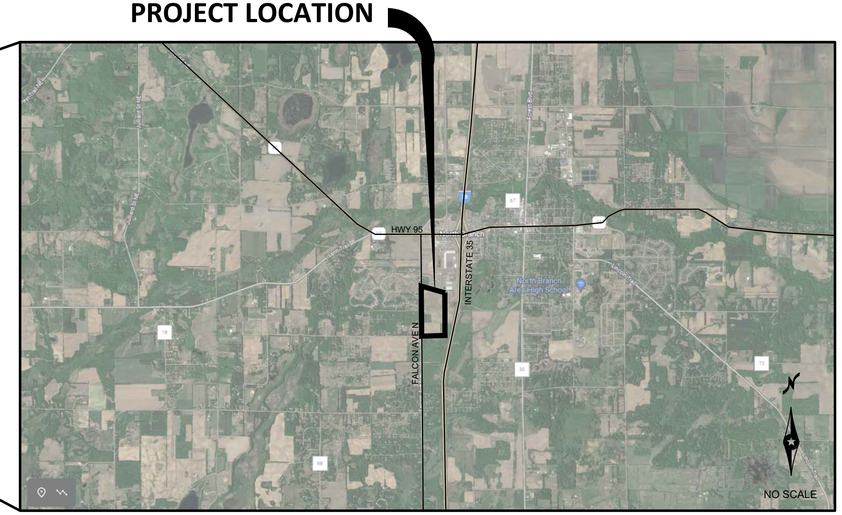


**VICINITY MAP**

| Sheet List Table | |
|---|---|
| Sheet Number | Sheet Title |
| C0 | Cover |
| C1.1 | Existing Conditions |
| C1.2 | Tree Preservation & Removals |
| C2.0 | Overall Site Plan |
| C2.1 | North Site Plan |
| C2.2 | South Site Plan |
| C2.3 | Future Development |
| C3.1 | North Grading Plan |
| C3.2 | South Grading Plan |
| C4.1 | North Utility Plan |
| C4.2 | South Utility Plan |
| C5.1 | 382nd & Falk Ave (Street & Storm) |
| C5.2 | Falk Ave (Street & Storm) |
| C5.3 | 381st Lane (Street & Storm) |
| C5.4 | Farnham Ct (Street & Storm) |
| C5.5 | 379th Street (Street & Storm) |
| C5.6 | Fallcrest Ct (Street & Storm) |
| C6.1 | 382nd & Falk Ave (Sani. & Water) |
| C6.2 | Falk Ave (Sani. & Water) |
| C6.3 | 381st Lane (Sani. & Water) |
| C6.4 | Farnham Ct (Sani. & Water) |
| C6.5 | 379th Street (Sani. & Water) |
| C6.6 | Fallcrest Ct (Sani. & Water) |
| C6.7 | Falcon Avenue N (Water) |
| C6.8 | Service Information |
| C7.1 | Turn Lane Plan |
| C7.2 | Traffic Control Plan (Turn Lane) |
| C7.3 | Traffic Control Plan (Detour) |
| C8.1 | North Erosion Control Plan |
| C8.2 | South Erosion Control Plan |
| C8.3 | SWPPP Narrative |
| C9.1 | Details |
| C9.2 | Details |
| C9.3 | Details |
| C9.4 | Details |
| C9.5 | Details |
| C9.6 | Details |
| C10.1 | North Landscape Plan |
| C10.2 | South Landscape Plan |

| REV NO. | DATE | DESCRIPTION |
|---|---|---|
| 1 | 04/01/2025 | REVISION PER CITY REVIEW |
| 2 | 04/24/2025 | REVISION PER CITY REVIEW |
| 3 | 05/29/2025 | REVISION PER CITY & COUNTY REVIEW |
| | | |
| | | |
| | | |
| | | |
| | | |
| | | |

PRIVATE UTILITIES SHOWN ARE QUALITY LEVEL D.
QUALITY LEVEL D PROVIDES THE MOST BASIC LEVEL OF INFORMATION. IT INVOLVES COLLECTING DATA FROM EXISTING UTILITY RECORDS. RECORDS MAY INCLUDE AS-BUILT DRAWINGS, DISTRIBUTION AND SERVICES MAPS, EXISTING GEOGRAPHIC INFORMATION SYSTEM DATABASES, CONSTRUCTION PLANS, ETC.

N:\Projects-Current\22-0030-02 Bezier North Branch Plat\Civil\CAD Files\NB Cover\SWPPP.dwg
5:25 PM
5/29/2025

## LEGEND:

- Denotes catch basin
- Denotes electrical cabinet
- Denotes mailbox
- Denotes gas service
- Denotes gas marker
- Denotes manhole
- Denotes watervalve
- Denotes power pole
- Denotes guy wire
- Denotes telephone pedestal
- Denotes cable television box
- Denotes hydrant
- Denotes soil boring
- Denotes well
- Denotes flared end section
- Denotes proposed wetland interior
- Denotes soils classification type
- LS 40361 — Denotes Thomas Ballul, LS
- LS 13115 — Denotes Terrance Johnson, LS
- LS 14945 — Denotes Robert Stransky, LS
- Denotes bituminous surface
- Denotes gravel surface
- Denotes barbwire fence
- Denotes underground telephone
- Denotes overhead electric
- Denotes underground fiber optics
- Denotes underground gas line
- Denotes easement
- Denotes right of way
- Denotes major contour
- Denotes minor contour
- Denotes sanitary sewer
- Denotes storm sewer
- Denotes waterline
- Denotes existing adjoiners
- Denotes building setback line
- Denotes field edge
- Denotes soil type boundary
- Denotes delineated wetland
- Denotes proposed wetland edge
- Denotes underground electric
- Denotes tree line

See Preliminary Plat, provided by Bogart, Pederson & Associates for more information

CALL 48 HOURS BEFORE DIGGING:
GOPHER STATE ONE CALL
TWIN CITY AREA 651-454-0002
MINNESOTA TOLL FREE 1-800-252-1166

| REV NO. | DATE | DESCRIPTION |
|---|---|---|
| 1 | 04/01/2025 | REVISION PER CITY REVIEW |
| 2 | 04/24/2025 | REVISION PER CITY REVIEW |
| 3 | 05/29/2025 | REVISION PER CITY & COUNTY REVIEW |

DATE: 05/29/2025
DESIGN BY: MJM
DRAWN BY: MJM
CHECKED BY: CJD
DWG FILE:
FILE NO.: 22-0030.00

I hereby certify that this plan, specification, or report was prepared by me or under my direct supervision and that I am a duly Licensed Professional Engineer under the laws of the State of Minnesota.

NOT FOR CONSTRUCTION

Signed: Christopher J. Dahn
Date: Lic. No. 58628

BOGART, PEDERSON & ASSOCIATES, INC.
LAND SURVEYING
CIVIL ENGINEERING
ENVIRONMENTAL SERVICES
13076 FIRST STREET, BECKER, MN 55308-9322
TEL: 763-262-9822 FAX: 763-262-9844

CEDAR RIDGE COMMUNITY LLC
CEDAR RIDGE COMMUNITY
City of North Branch, Chisago County, MN

EXISTING CONDITIONS

SHEET NO.
C1.1

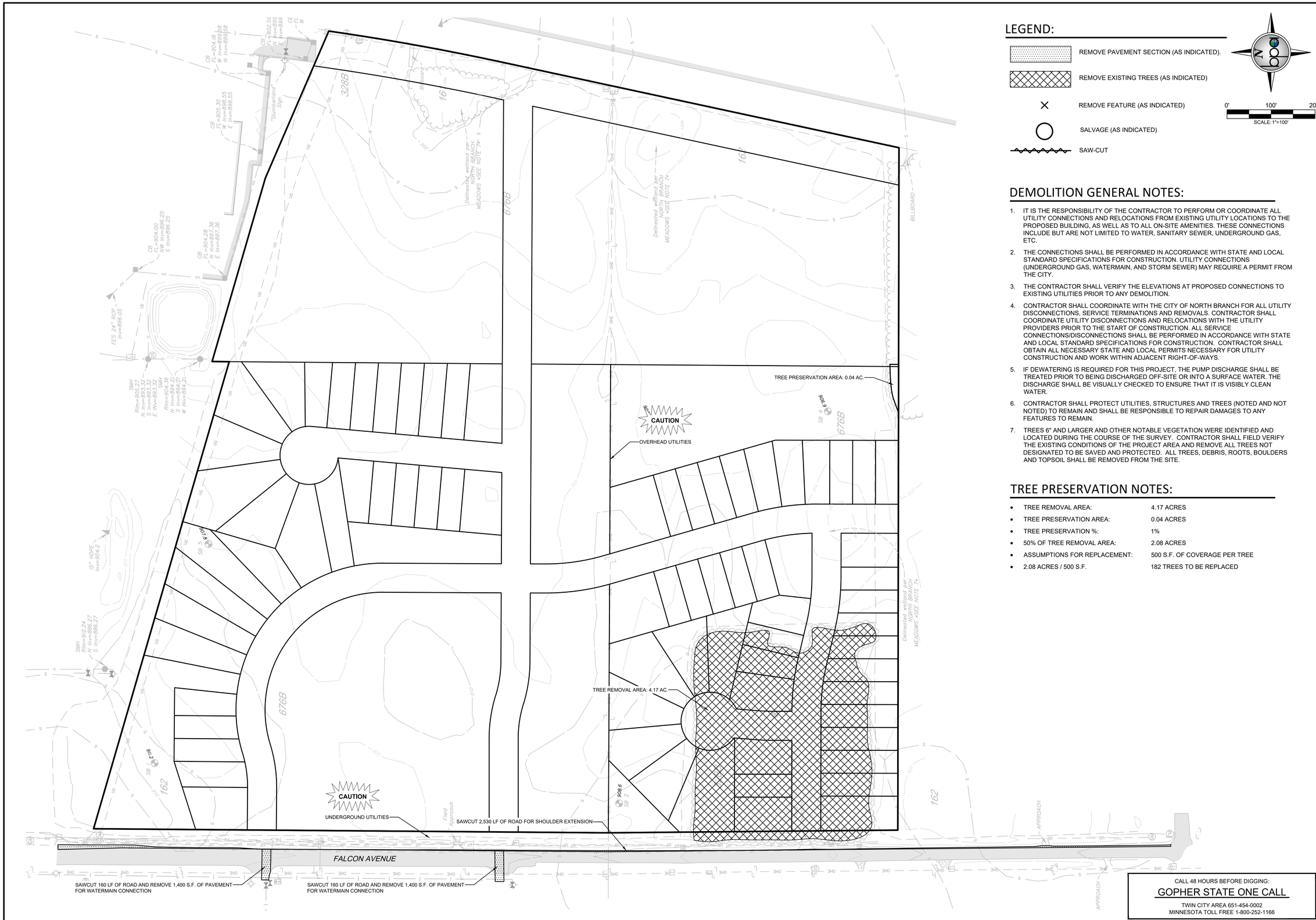


## LEGEND:

- REMOVE PAVEMENT SECTION (AS INDICATED).
- REMOVE EXISTING TREES (AS INDICATED)
- REMOVE FEATURE (AS INDICATED)
- SALVAGE (AS INDICATED)
- SAW-CUT

0' 100' 200'
SCALE: 1"=100'

## DEMOLITION GENERAL NOTES:

1. IT IS THE RESPONSIBILITY OF THE CONTRACTOR TO PERFORM OR COORDINATE ALL UTILITY CONNECTIONS AND RELOCATIONS FROM EXISTING UTILITY LOCATIONS TO THE PROPOSED BUILDING, AS WELL AS TO ALL ON-SITE AMENITIES. THESE CONNECTIONS INCLUDE BUT ARE NOT LIMITED TO WATER, SANITARY SEWER, UNDERGROUND GAS, ETC.
2. THE CONNECTIONS SHALL BE PERFORMED IN ACCORDANCE WITH STATE AND LOCAL STANDARD SPECIFICATIONS FOR CONSTRUCTION. UTILITY CONNECTIONS (UNDERGROUND GAS, WATERMAIN, AND STORM SEWER) MAY REQUIRE A PERMIT FROM THE CITY.
3. THE CONTRACTOR SHALL VERIFY THE ELEVATIONS AT PROPOSED CONNECTIONS TO EXISTING UTILITIES PRIOR TO ANY DEMOLITION.
4. CONTRACTOR SHALL COORDINATE WITH THE CITY OF NORTH BRANCH FOR ALL UTILITY DISCONNECTIONS, SERVICE TERMINATIONS AND REMOVALS. CONTRACTOR SHALL COORDINATE UTILITY DISCONNECTIONS AND RELOCATIONS WITH THE UTILITY PROVIDERS PRIOR TO THE START OF CONSTRUCTION. ALL SERVICE CONNECTIONS/DISCONNECTIONS SHALL BE PERFORMED IN ACCORDANCE WITH STATE AND LOCAL STANDARD SPECIFICATIONS FOR CONSTRUCTION. CONTRACTOR SHALL OBTAIN ALL NECESSARY STATE AND LOCAL PERMITS NECESSARY FOR UTILITY CONSTRUCTION AND WORK WITHIN ADJACENT RIGHT-OF-WAYS.
5. IF DEWATERING IS REQUIRED FOR THIS PROJECT, THE PUMP DISCHARGE SHALL BE TREATED PRIOR TO BEING DISCHARGED OFF-SITE OR INTO A SURFACE WATER. THE DISCHARGE SHALL BE VISUALLY CHECKED TO ENSURE THAT IT IS VISIBLY CLEAN WATER.
6. CONTRACTOR SHALL PROTECT UTILITIES, STRUCTURES AND TREES (NOTED AND NOT NOTED) TO REMAIN AND SHALL BE RESPONSIBLE TO REPAIR DAMAGES TO ANY FEATURES TO REMAIN.
7. TREES 6" AND LARGER AND OTHER NOTABLE VEGETATION WERE IDENTIFIED AND LOCATED DURING THE COURSE OF THE SURVEY. CONTRACTOR SHALL FIELD VERIFY THE EXISTING CONDITIONS OF THE PROJECT AREA AND REMOVE ALL TREES NOT DESIGNATED TO BE SAVED AND PROTECTED. ALL TREES, DEBRIS, ROOTS, BOULDERS AND TOPSOIL SHALL BE REMOVED FROM THE SITE.

## TREE PRESERVATION NOTES:

| | |
|---|---|
| • TREE REMOVAL AREA: | 4.17 ACRES |
| • TREE PRESERVATION AREA: | 0.04 ACRES |
| • TREE PRESERVATION %: | 1% |
| • 50% OF TREE REMOVAL AREA: | 2.08 ACRES |
| • ASSUMPTIONS FOR REPLACEMENT: | 500 S.F. OF COVERAGE PER TREE |
| • 2.08 ACRES / 500 S.F. | 182 TREES TO BE REPLACED |

CALL 48 HOURS BEFORE DIGGING:
GOPHER STATE ONE CALL
TWIN CITY AREA 651-454-0002
MINNESOTA TOLL FREE 1-800-252-1166

| REV NO. | DATE | DESCRIPTION |
|---|---|---|
| 1 | 04/01/2025 | REVISION PER CITY REVIEW |
| 2 | 04/24/2025 | REVISION PER CITY REVIEW |
| 3 | 05/29/2025 | REVISION PER CITY & COUNTY REVIEW |

DATE: 05/29/2025
DESIGN BY: MJM
DRAWN BY: MJM
CHECKED BY: CJD
DWG FILE: DEMOLITION
FILE NO.: 22-0030.00

I hereby certify that this plan, specification, or report was prepared by me or under my direct supervision and that I am a duly Licensed Professional Engineer under the laws of the State of Minnesota.

NOT FOR CONSTRUCTION

Signed: Christopher J. Dahn
Date: Lic. No. 58628

BOGART, PEDERSON & ASSOCIATES, INC.
LAND SURVEYING
CIVIL ENGINEERING
ENVIRONMENTAL SERVICES
13076 FIRST STREET, BECKER, MN 55308-9322
TEL: 763-262-9322 FAX: 763-262-9344

CEDAR RIDGE COMMUNITY LLC
CEDAR RIDGE COMMUNITY
City of North Branch, Chisago County, MN

TREE PRESERVATION & REMOVALS

SHEET NO.
C1.2

N:\Projects Current\22-0030.02 Belzer North Branch Pine\Civil\CAD Files\NB Tree Preserve.dwg
5:26 PM
5/29/2025

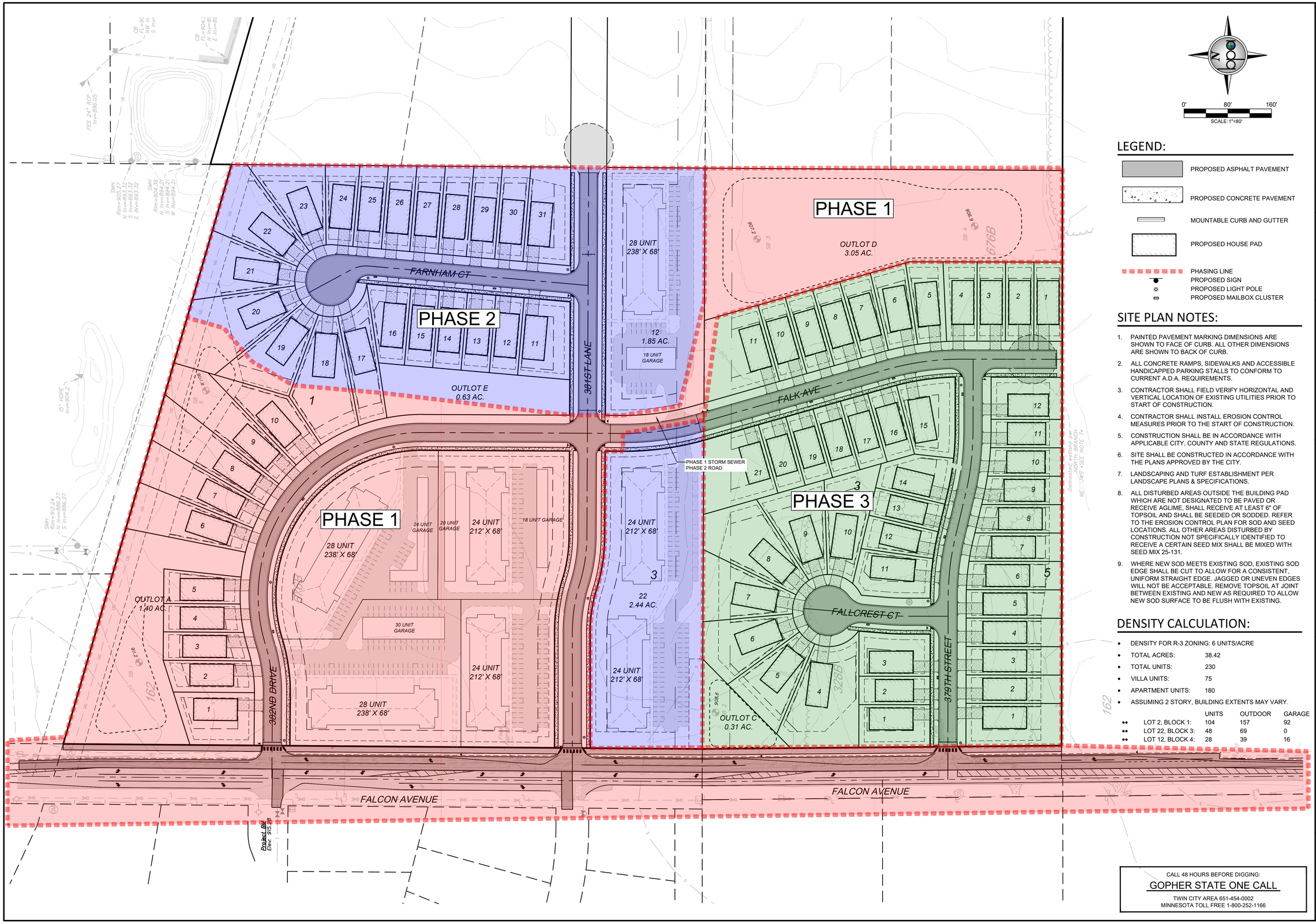


0' 80' 160'
SCALE: 1"=80'

## LEGEND:

- PROPOSED ASPHALT PAVEMENT
- PROPOSED CONCRETE PAVEMENT
- MOUNTABLE CURB AND GUTTER
- PROPOSED HOUSE PAD
- PHASING LINE
- PROPOSED SIGN
- PROPOSED LIGHT POLE
- PROPOSED MAILBOX CLUSTER

## SITE PLAN NOTES:

1. PAINTED PAVEMENT MARKING DIMENSIONS ARE SHOWN TO FACE OF CURB. ALL OTHER DIMENSIONS ARE SHOWN TO BACK OF CURB.
2. ALL CONCRETE RAMPS, SIDEWALKS AND ACCESSIBLE HANDICAPPED PARKING STALLS TO CONFORM TO CURRENT A.D.A. REQUIREMENTS.
3. CONTRACTOR SHALL FIELD VERIFY HORIZONTAL AND VERTICAL LOCATION OF EXISTING UTILITIES PRIOR TO START OF CONSTRUCTION.
4. CONTRACTOR SHALL INSTALL EROSION CONTROL MEASURES PRIOR TO THE START OF CONSTRUCTION.
5. CONSTRUCTION SHALL BE IN ACCORDANCE WITH APPLICABLE CITY, COUNTY AND STATE REGULATIONS.
6. SITE SHALL BE CONSTRUCTED IN ACCORDANCE WITH THE PLANS APPROVED BY THE CITY.
7. LANDSCAPING AND TURF ESTABLISHMENT PER LANDSCAPE PLANS & SPECIFICATIONS.
8. ALL DISTURBED AREAS OUTSIDE THE BUILDING PAD WHICH ARE NOT DESIGNATED TO BE PAVED OR RECEIVE AGLIME, SHALL RECEIVE AT LEAST 6" OF TOPSOIL AND SHALL BE SEEDED OR SODDED. REFER TO THE EROSION CONTROL PLAN FOR SOD AND SEED LOCATIONS. ALL OTHER AREAS DISTURBED BY CONSTRUCTION NOT SPECIFICALLY IDENTIFIED TO RECEIVE A CERTAIN SEED MIX SHALL BE MIXED WITH SEED MIX 25-131.
9. WHERE NEW SOD MEETS EXISTING SOD, EXISTING SOD EDGE SHALL BE CUT TO ALLOW FOR A CONSISTENT, UNIFORM STRAIGHT EDGE. JAGGED OR UNEVEN EDGES WILL NOT BE ACCEPTABLE. REMOVE TOPSOIL AT JOINT BETWEEN EXISTING AND NEW AS REQUIRED TO ALLOW NEW SOD SURFACE TO BE FLUSH WITH EXISTING.

## DENSITY CALCULATION:

- DENSITY FOR R-3 ZONING: 6 UNITS/ACRE
- TOTAL ACRES: 38.42
- TOTAL UNITS: 230
- VILLA UNITS: 75
- APARTMENT UNITS: 180
- ASSUMING 2 STORY, BUILDING EXTENTS MAY VARY.

| | UNITS | OUTDOOR | GARAGE |
|---|---|---|---|
| LOT 2, BLOCK 1: | 104 | 157 | 92 |
| LOT 22, BLOCK 3: | 48 | 69 | 0 |
| LOT 12, BLOCK 4: | 28 | 39 | 16 |

CALL 48 HOURS BEFORE DIGGING:
GOPHER STATE ONE CALL
TWIN CITY AREA 651-454-0002
MINNESOTA TOLL FREE 1-800-252-1166

| REV NO. | DATE | DESCRIPTION |
|---|---|---|
| 1 | 04/01/2025 | REVISION PER CITY REVIEW |
| 2 | 04/24/2025 | REVISION PER CITY REVIEW |
| 3 | 05/29/2025 | REVISION PER CITY & COUNTY REVIEW |

DATE: 05/29/2025
DESIGN BY: MJM
DRAWN BY: MJM
CHECKED BY: CJD
DWG FILE: SITE BASE
FILE NO.: 22-0030.00

I hereby certify that this plan, specification, or report was prepared by me or under my direct supervision and that I am a duly Licensed Professional Engineer under the laws of the State of Minnesota.

NOT FOR CONSTRUCTION

Signed: Christopher J. Dahn
Date: Lic. No. 58628

BOGART, PEDERSON & ASSOCIATES, INC.
LAND SURVEYING
CIVIL ENGINEERING
ENVIRONMENTAL SERVICES
13076 FIRST STREET, BECKER, MN 55308-9322
TEL: 763-262-9622 FAX: 763-262-9644

CEDAR RIDGE COMMUNITY LLC
CEDAR RIDGE COMMUNITY
City of North Branch, Chisago County, MN

OVERALL SITE PLAN

SHEET NO.
C2.0

N:\Projects Current\22-0030.02 Belzer North Branch Plat\Civil\CAD Files\NB Site Base.dwg 5/29/2025 5:35 PM

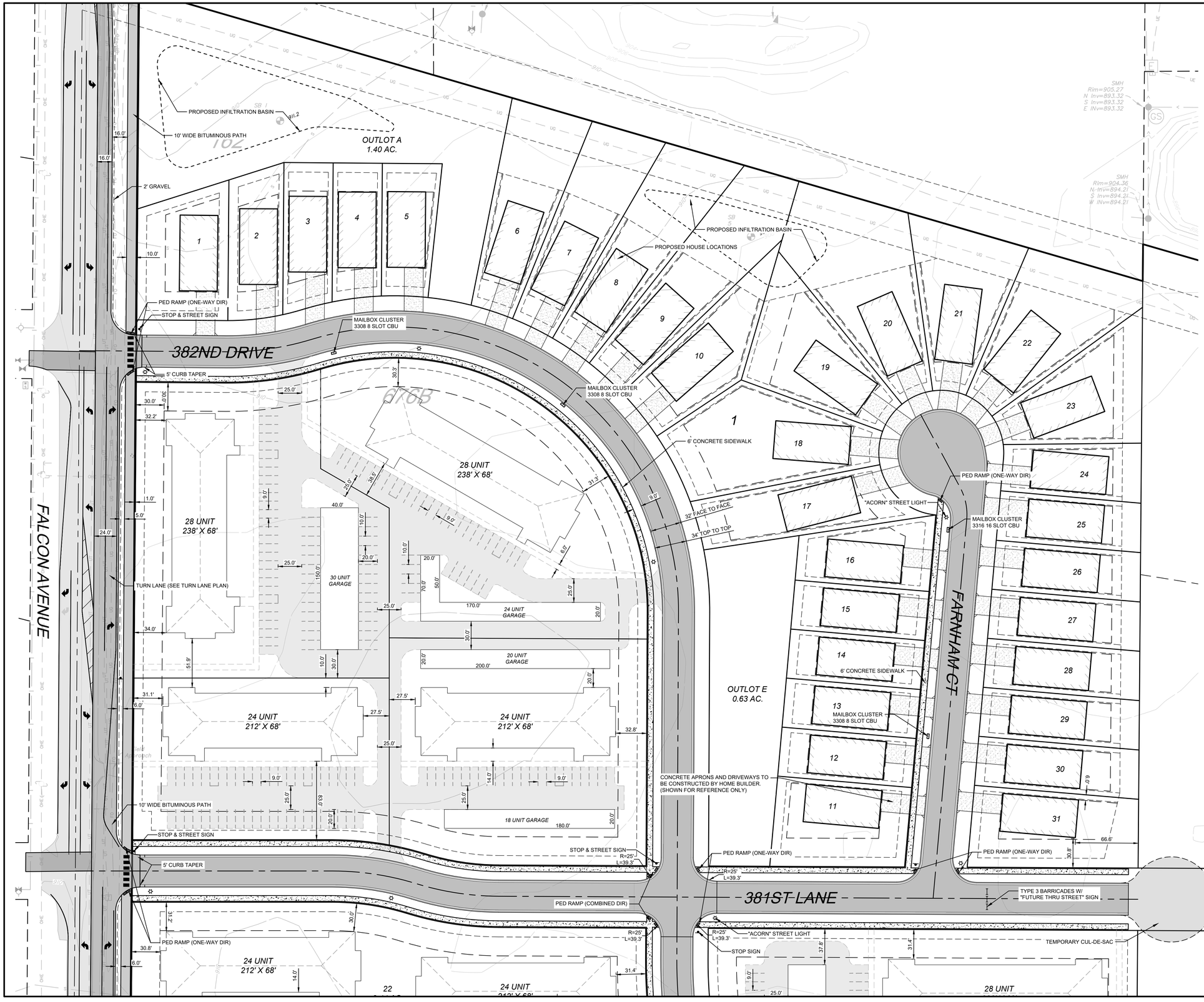


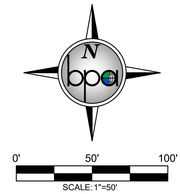


## LEGEND:

- PROPOSED ASPHALT PAVEMENT
- PROPOSED CONCRETE PAVEMENT
- MOUNTABLE CURB AND GUTTER
- PROPOSED HOUSE PAD
- PHASING LINE
- PROPOSED SIGN
- PROPOSED LIGHT POLE
- PROPOSED MAILBOX CLUSTER

## SITE PLAN NOTES:

1. PAINTED PAVEMENT MARKING DIMENSIONS ARE SHOWN TO FACE OF CURB. ALL OTHER DIMENSIONS ARE SHOWN TO BACK OF CURB.
2. ALL CONCRETE RAMPS, SIDEWALKS AND ACCESSIBLE HANDICAPPED PARKING STALLS TO CONFORM TO CURRENT A.D.A. REQUIREMENTS.
3. CONTRACTOR SHALL FIELD VERIFY HORIZONTAL AND VERTICAL LOCATION OF EXISTING UTILITIES PRIOR TO START OF CONSTRUCTION.
4. CONTRACTOR SHALL INSTALL EROSION CONTROL MEASURES PRIOR TO THE START OF CONSTRUCTION.
5. CONSTRUCTION SHALL BE IN ACCORDANCE WITH APPLICABLE CITY, COUNTY AND STATE REGULATIONS.
6. SITE SHALL BE CONSTRUCTED IN ACCORDANCE WITH THE PLANS APPROVED BY THE CITY.
7. LANDSCAPING AND TURF ESTABLISHMENT PER LANDSCAPE PLANS & SPECIFICATIONS.
8. ALL DISTURBED AREAS OUTSIDE THE BUILDING PAD WHICH ARE NOT DESIGNATED TO BE PAVED OR RECEIVE AGLIME, SHALL RECEIVE AT LEAST 6" OF TOPSOIL AND SHALL BE SEEDED OR SODDED. REFER TO THE EROSION CONTROL PLAN FOR SOD AND SEED LOCATIONS. ALL OTHER AREAS DISTURBED BY CONSTRUCTION NOT SPECIFICALLY IDENTIFIED TO RECEIVE A CERTAIN SEED MIX SHALL BE MIXED WITH SEED MIX 25-131.
9. WHERE NEW SOD MEETS EXISTING SOD, EXISTING SOD EDGE SHALL BE CUT TO ALLOW FOR A CONSISTENT, UNIFORM STRAIGHT EDGE. JAGGED OR UNEVEN EDGES WILL NOT BE ACCEPTABLE. REMOVE TOPSOIL AT JOINT BETWEEN EXISTING AND NEW AS REQUIRED TO ALLOW NEW SOD SURFACE TO BE FLUSH WITH EXISTING.

CALL 48 HOURS BEFORE DIGGING:
GOPHER STATE ONE CALL
TWIN CITY AREA 651-454-0002
MINNESOTA TOLL FREE 1-800-252-1166

| REV NO. | DATE | DESCRIPTION |
|---|---|---|
| 1 | 04/01/2025 | REVISION PER CITY REVIEW |
| 2 | 04/24/2025 | REVISION PER CITY REVIEW |
| 3 | 05/29/2025 | REVISION PER CITY & COUNTY REVIEW |

DATE: 05/29/2025
DESIGN BY: MJM
DRAWN BY: MJM
CHECKED BY: CJD
DWG FILE: SITE BASE
FILE NO.: 22-0030.00

I hereby certify that this plan, specification, or report was prepared by me or under my direct supervision and that I am a duly Licensed Professional Engineer under the laws of the State of Minnesota.

Signed: Christopher J. Dahn
Date: Lic. No. 58628

NOT FOR CONSTRUCTION

BOGART, PEDERSON & ASSOCIATES, INC.
LAND SURVEYING
CIVIL ENGINEERING
ENVIRONMENTAL SERVICES
13076 FIRST STREET, BECKER, MN 55308-9322
TEL: 763-262-9222 FAX: 763-262-9944

CEDAR RIDGE COMMUNITY LLC
CEDAR RIDGE COMMUNITY
City of North Branch, Chisago County, MN

NORTH SITE PLAN

SHEET NO.
C2.1

N:\Projects Current\22-0030.00 Belzer North Branch\Part\Civil\CAD Files\NB Site Base.dwg 5/29/2025 5:35 PM

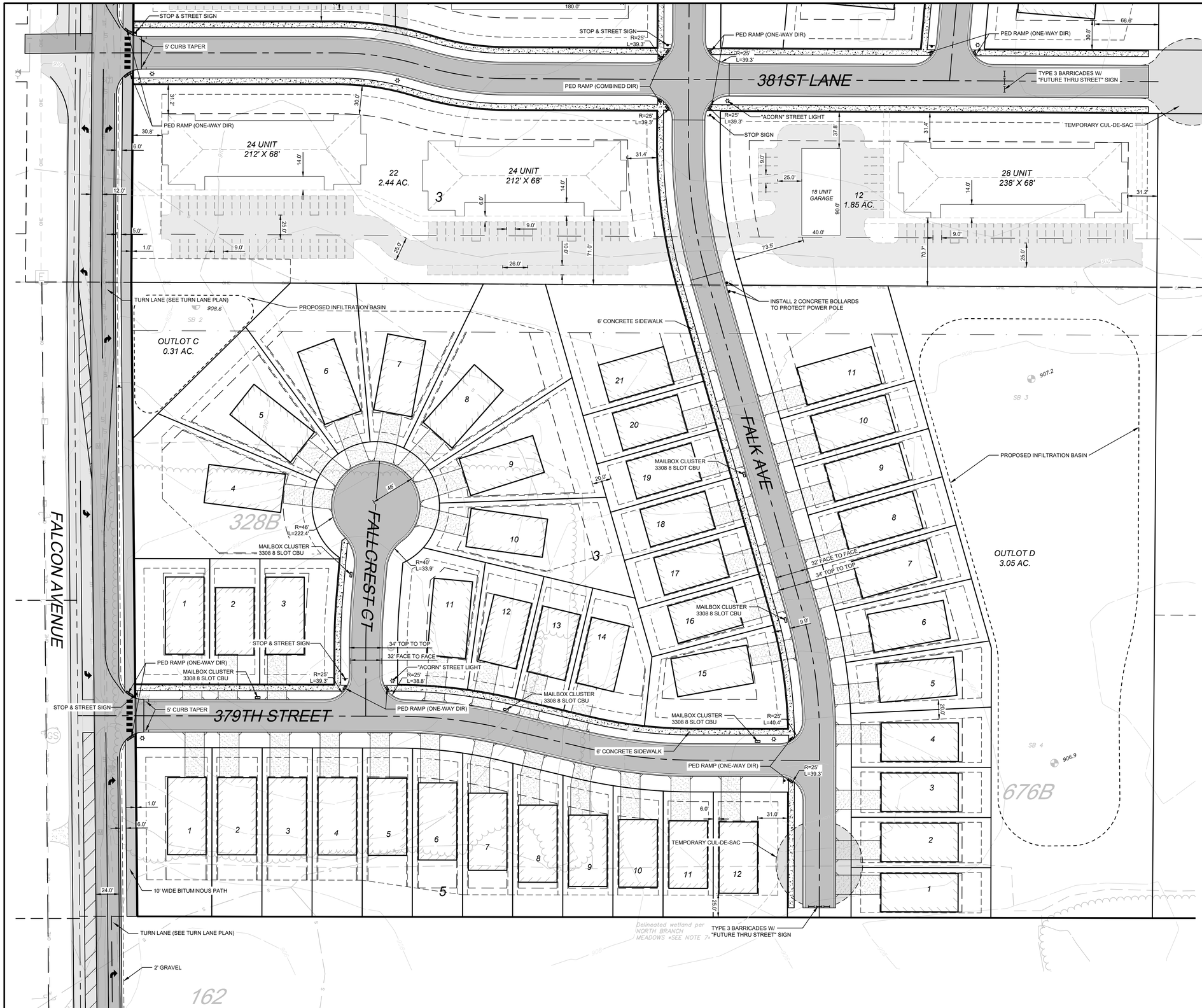


0' 50' 100'
SCALE: 1"=50'

## LEGEND:

- PROPOSED ASPHALT PAVEMENT
- PROPOSED CONCRETE PAVEMENT
- MOUNTABLE CURB AND GUTTER
- PROPOSED HOUSE PAD
- PHASING LINE
- PROPOSED SIGN
- PROPOSED LIGHT POLE
- PROPOSED MAILBOX CLUSTER

## SITE PLAN NOTES:

1. PAINTED PAVEMENT MARKING DIMENSIONS ARE SHOWN TO FACE OF CURB. ALL OTHER DIMENSIONS ARE SHOWN TO BACK OF CURB.
2. ALL CONCRETE RAMPS, SIDEWALKS AND ACCESSIBLE HANDICAPPED PARKING STALLS TO CONFORM TO CURRENT A.D.A. REQUIREMENTS.
3. CONTRACTOR SHALL FIELD VERIFY HORIZONTAL AND VERTICAL LOCATION OF EXISTING UTILITIES PRIOR TO START OF CONSTRUCTION.
4. CONTRACTOR SHALL INSTALL EROSION CONTROL MEASURES PRIOR TO THE START OF CONSTRUCTION.
5. CONSTRUCTION SHALL BE IN ACCORDANCE WITH APPLICABLE CITY, COUNTY AND STATE REGULATIONS.
6. SITE SHALL BE CONSTRUCTED IN ACCORDANCE WITH THE PLANS APPROVED BY THE CITY.
7. LANDSCAPING AND TURF ESTABLISHMENT PER LANDSCAPE PLANS & SPECIFICATIONS.
8. ALL DISTURBED AREAS OUTSIDE THE BUILDING PAD WHICH ARE NOT DESIGNATED TO BE PAVED OR RECEIVE AGLIME, SHALL RECEIVE AT LEAST 6" OF TOPSOIL AND SHALL BE SEEDED OR SODDED. REFER TO THE EROSION CONTROL PLAN FOR SOD AND SEED LOCATIONS. ALL OTHER AREAS DISTURBED BY CONSTRUCTION NOT SPECIFICALLY IDENTIFIED TO RECEIVE A CERTAIN SEED MIX SHALL BE MIXED WITH SEED MIX 25-131.
9. WHERE NEW SOD MEETS EXISTING SOD, EXISTING SOD EDGE SHALL BE CUT TO ALLOW FOR A CONSISTENT, UNIFORM STRAIGHT EDGE. JAGGED OR UNEVEN EDGES WILL NOT BE ACCEPTABLE. REMOVE TOPSOIL AT JOINT BETWEEN EXISTING AND NEW AS REQUIRED TO ALLOW NEW SOD SURFACE TO BE FLUSH WITH EXISTING.

CALL 48 HOURS BEFORE DIGGING:
GOPHER STATE ONE CALL
TWIN CITY AREA 651-454-0002
MINNESOTA TOLL FREE 1-800-252-1166

| REV NO. | DATE | DESCRIPTION |
|---|---|---|
| 1 | 04/01/2025 | REVISION PER CITY REVIEW |
| 2 | 04/24/2025 | REVISION PER CITY REVIEW |
| 3 | 05/29/2025 | REVISION PER CITY & COUNTY REVIEW |

DATE: 05/29/2025
DESIGN BY: MJM
DRAWN BY: MJM
CHECKED BY: CJD
DWG FILE: SITE BASE
FILE NO.: 22-0030.00

I hereby certify that this plan, specification, or report was prepared by me or under my direct supervision and that I am a duly Licensed Professional Engineer under the laws of the State of Minnesota.

NOT FOR CONSTRUCTION

Signed: Christopher J. Dahn
Date: Lic. No. 58628

BOGART, PEDERSON & ASSOCIATES, INC.
LAND SURVEYING
CIVIL ENGINEERING
ENVIRONMENTAL SERVICES
13076 FIRST STREET, BECKER, MN 55308-9322
TEL: 763-262-9022 FAX: 763-262-9044

CEDAR RIDGE COMMUNITY LLC
CEDAR RIDGE COMMUNITY
City of North Branch, Chisago County, MN

SOUTH SITE PLAN

SHEET NO.
C2.2

N:\Projects-Current\22-0030.00 Belcher North Branch\Plat\Civil\CAD Files\NB Site Base.dwg
5/29/2025 5:25 PM

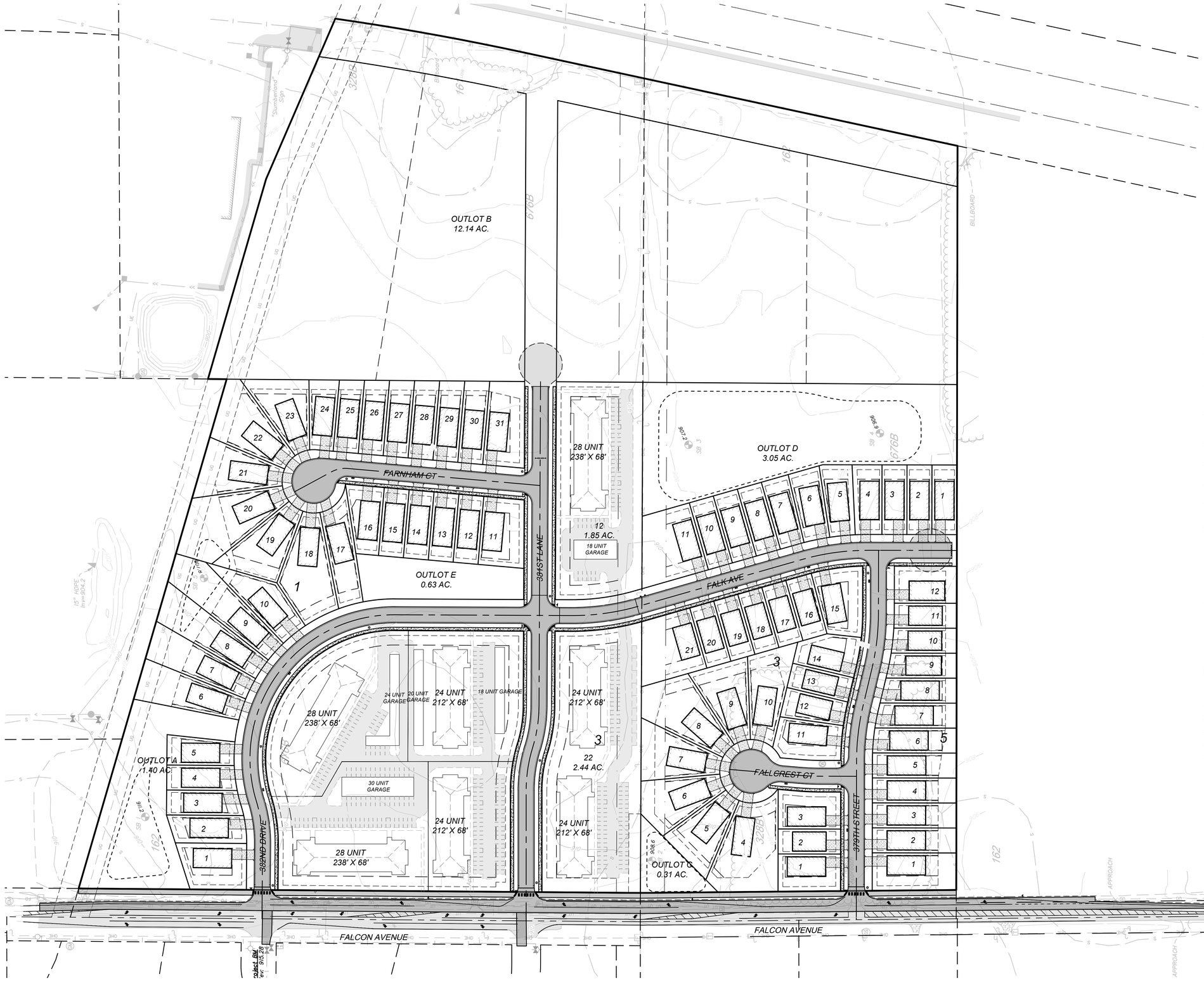


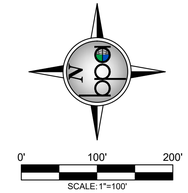


## LEGEND:

- PROPOSED ASPHALT PAVEMENT
- PROPOSED CONCRETE PAVEMENT
- MOUNTABLE CURB AND GUTTER
- PROPOSED HOUSE PAD
- PHASING LINE
- PROPOSED SIGN
- PROPOSED LIGHT POLE
- PROPOSED MAILBOX CLUSTER

## SITE PLAN NOTES:

1. PAINTED PAVEMENT MARKING DIMENSIONS ARE SHOWN TO FACE OF CURB. ALL OTHER DIMENSIONS ARE SHOWN TO BACK OF CURB.
2. ALL CONCRETE RAMPS, SIDEWALKS AND ACCESSIBLE HANDICAPPED PARKING STALLS TO CONFORM TO CURRENT A.D.A. REQUIREMENTS.
3. CONTRACTOR SHALL FIELD VERIFY HORIZONTAL AND VERTICAL LOCATION OF EXISTING UTILITIES PRIOR TO START OF CONSTRUCTION.
4. CONTRACTOR SHALL INSTALL EROSION CONTROL MEASURES PRIOR TO THE START OF CONSTRUCTION.
5. CONSTRUCTION SHALL BE IN ACCORDANCE WITH APPLICABLE CITY, COUNTY AND STATE REGULATIONS.
6. SITE SHALL BE CONSTRUCTED IN ACCORDANCE WITH THE PLANS APPROVED BY THE CITY.
7. LANDSCAPING AND TURF ESTABLISHMENT PER LANDSCAPE PLANS & SPECIFICATIONS.
8. ALL DISTURBED AREAS OUTSIDE THE BUILDING PAD WHICH ARE NOT DESIGNATED TO BE PAVED OR RECEIVE AGLIME, SHALL RECEIVE AT LEAST 6" OF TOPSOIL AND SHALL BE SEEDED OR SODDED. REFER TO THE EROSION CONTROL PLAN FOR SOD AND SEED LOCATIONS. ALL OTHER AREAS DISTURBED BY CONSTRUCTION NOT SPECIFICALLY IDENTIFIED TO RECEIVE A CERTAIN SEED MIX SHALL BE MIXED WITH SEED MIX 25-131.
9. WHERE NEW SOD MEETS EXISTING SOD, EXISTING SOD EDGE SHALL BE CUT TO ALLOW FOR A CONSISTENT, UNIFORM STRAIGHT EDGE. JAGGED OR UNEVEN EDGES WILL NOT BE ACCEPTABLE. REMOVE TOPSOIL AT JOINT BETWEEN EXISTING AND NEW AS REQUIRED TO ALLOW NEW SOD SURFACE TO BE FLUSH WITH EXISTING.

## DENSITY CALCULATION:

- DENSITY FOR R-3 ZONING: 6 UNITS/ACRE
- TOTAL ACRES: 38.42
- TOTAL UNITS: 230
- VILLA UNITS: 63
- APARTMENT UNITS: 167
- ASSUMING 2 STORY, UNDERGROUND PARKING, BUILDING EXTENTS MAY VARY.
  - LOT 2, BLOCK 1: 97 — 197 OUTDOOR STALLS
  - LOT 22, BLOCK 3: 40 — 90 OUTDOOR STALLS
  - LOT 12, BLOCK 4: 30 — 61 OUTDOOR STALLS

CALL 48 HOURS BEFORE DIGGING:
GOPHER STATE ONE CALL
TWIN CITY AREA 651-454-0002
MINNESOTA TOLL FREE 1-800-252-1166

| REV NO. | DATE | DESCRIPTION |
|---|---|---|
| 1 | 04/01/2025 | REVISION PER CITY REVIEW |
| 2 | 04/24/2025 | REVISION PER CITY REVIEW |
| 3 | 05/29/2025 | REVISION PER CITY & COUNTY REVIEW |

DATE: 05/29/2025
DESIGN BY: MJM
DRAWN BY: MJM
CHECKED BY: CJD
DWG FILE: SITE BASE
FILE NO.: 22-0030.00

I hereby certify that this plan, specification, or report was prepared by me or under my direct supervision and that I am a duly Licensed Professional Engineer under the laws of the State of Minnesota.

Signed: Christopher J. Dahn
Date: Lic. No. 58628

NOT FOR CONSTRUCTION

BOGART, PEDERSON & ASSOCIATES, INC.
LAND SURVEYING
CIVIL ENGINEERING
ENVIROMENTAL SERVICES
13076 FIRST STREET, BECKER, MN 55308-9322
TEL: 763-262-9622 FAX: 763-262-9644

CEDAR RIDGE COMMUNITY LLC
CEDAR RIDGE COMMUNITY
City of North Branch, Chisago County, MN

FUTURE DEVELOPMENT

SHEET NO.
C2.3

N:\Projects Current\22-0030.02 Bellizer North Branch Plat\Civil\CAD Files\NB Site Base.dwg
5/29/2025 5:25 PM

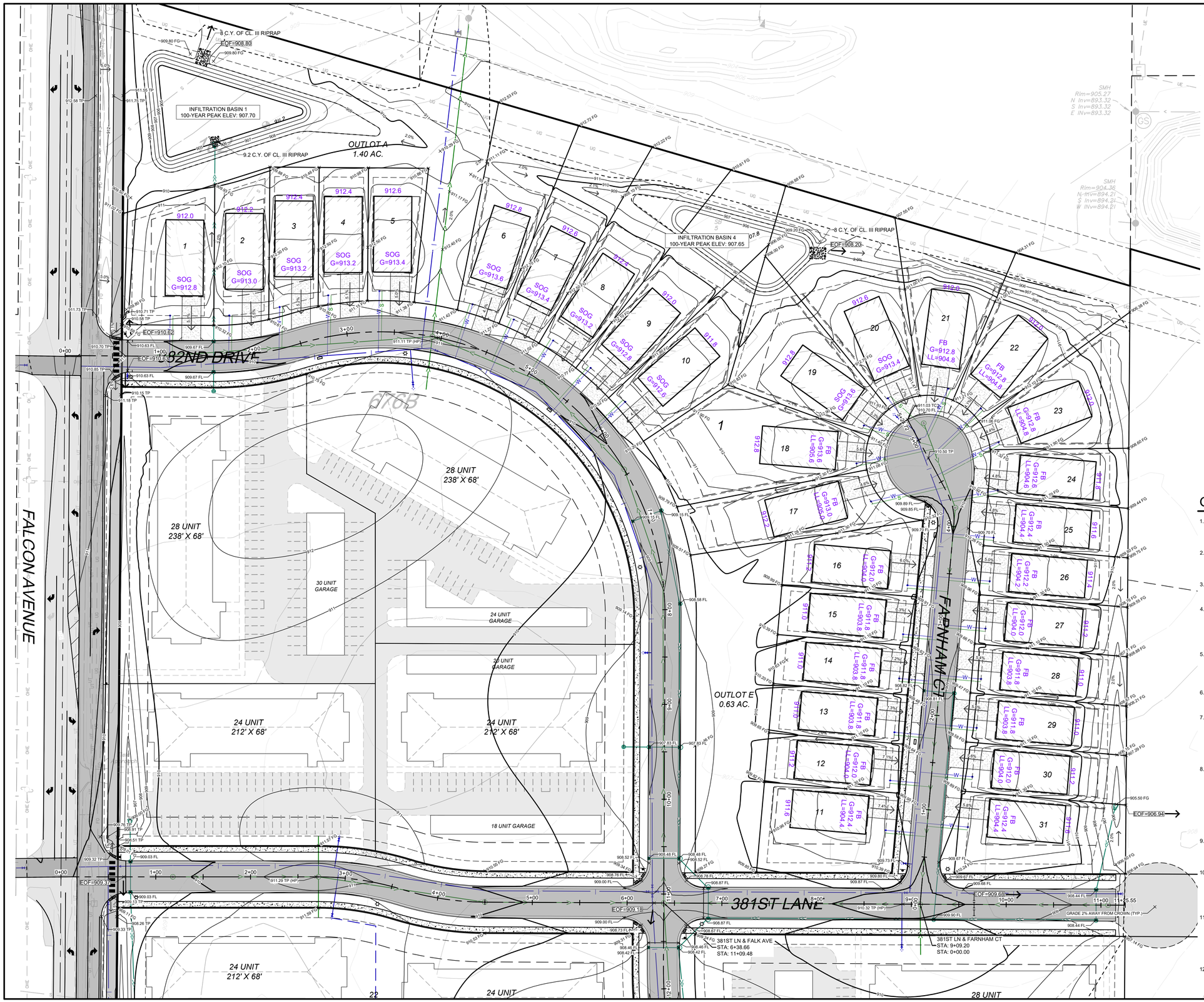


FB
G=913.0
LL=905.0

911.5

-HOUSE TYPE
-GARAGE ELEVATION
-LOWER LEVEL ELEVATION

FB: FULL BASEMENT
SOG: SLAB ON GRADE

-BACKYARD ELEVATION

## GRADING GENERAL NOTES:

1. THE CONTRACTOR SHALL NOTE ANY DISCREPANCIES BETWEEN EXISTING CONDITIONS IN THE FIELD REPRESENTED WITHIN THE PLANS AS SHOWN AND ALERT THE ENGINEER BEFORE BIDDING THE PROJECT AND BEGINNING CONSTRUCTION.
2. CONTRACTOR SHALL LOCATE AND VERIFY ALL UTILITIES WHICH MAY AFFECT THIS WORK AND NOTIFY THE OWNER OF ANY CHANGES. CONTACT LOCAL UTILITY COMPANIES FOR EXACT LOCATIONS PRIOR TO BIDDING THE PROJECT AND COMMENCING WORK.
3. CONTRACTOR SHALL TAKE NECESSARY PRECAUTIONS TO PREVENT SILT AND DEBRIS RUN-OFF DURING GRADING OPERATIONS (I.E. SILT FENCE, STRAW BALES, ETC.).
4. CONTRACTOR SHALL VERIFY CRITICAL ELEVATIONS TO ENSURE CONFORMANCE WITH GRADING PLAN, PARTICULARLY WITH EXISTING STRUCTURES AND/OR PAVEMENTS TO REMAIN. MEET EXISTING GRADES ALONG STREETS, PROPERTY LINES, AND DRIVEWAY ENTRANCES. RESTORE ALL PAVEMENTS THAT REMAIN TO THEIR ORIGINAL IF NOT BETTER CONDITION. NOTIFY OWNER OF ANY CONFLICTS PRIOR TO BIDDING THE PROJECT.
5. TURF ESTABLISHMENT AREAS SHALL RECEIVE MINIMUM OF 4" DEPTH AS MEASURED IN PLACE OF TOPSOIL. TOPSOIL SHALL BE FURNISHED AND INSTALLED BY THE CONTRACTOR. ALL GRADED SLOPES GREATER THAN OR EQUAL TO 5:1 SHALL BE HYDROSEEDED, EROSION CONTROL BLANKETED, OR MULCHED TO HELP STABILIZE THE SLOPES BY GENERAL CONTRACTOR.
6. PROPOSED SPOT ELEVATIONS ARE TO THE TOP OF CURB UNLESS NOTED OTHERWISE. ELEVATION OF FLOW LINE IS 6" BELOW TOP OF CURB UNLESS OTHERWISE SHOWN.
7. CONTRACTOR SHALL BE SOLELY RESPONSIBLE FOR DETERMINING QUANTITIES OF CUT, FILL AND WASTE MATERIALS TO BE HANDLED, AND FOR AMOUNT OF GRADING TO BE DONE IN ORDER TO COMPLETELY PERFORM ALL WORK INDICATED ON THE DRAWINGS. IMPORT SUITABLE MATERIAL AND EXPORT UNSUITABLE / EXCESS / WASTE MATERIAL AS REQUIRED. ALL COSTS ASSOCIATED WITH IMPORTING AND EXPORTING MATERIALS SHALL BE INCIDENTAL TO THE CONTRACT.
8. IT IS INTENDED THAT EARTHWORK (CUT VS. FILL) WILL NOT BALANCE ON SITE. THE CONTRACTOR SHALL SUBMIT THE QUANTITY OF MATERIAL AND AMOUNT OF ANTICIPATED GRADE ADJUSTMENT FOR REVIEW BY THE ENGINEER A MINIMUM OF FOUR WEEKDAYS PRIOR TO MAKING ADJUSTMENTS. ALL GRADE ADJUSTMENTS MUST BE APPROVED BY THE ENGINEER. NO ADDITIONAL COMPENSATION SHALL BE ALLOWED FOR WORK ASSOCIATED WITH GRADING ADJUSTMENTS, INCLUDING, BUT NOT LIMITED TO, EARTHWORK OPERATIONS, STORM SEWER PIPING AND STRUCTURE ADJUSTMENTS, CONSTRUCTION SURVEYING FOR ADJUSTING FEATURE LOCATIONS ACCORDINGLY, SILT FENCE, ETC.
9. FAILURE OF TURF DEVELOPMENT: IN THE EVENT THE CONTRACTOR FAILS TO PROVIDE AN ACCEPTABLE TURF, THE CONTRACTOR SHALL RE-SEED OR RE-SOD ALL APPLICABLE AREAS, AT NO ADDITIONAL COST TO THE OWNER, TO THE SATISFACTION OF THE ENGINEER.
10. ANY MANHOLE, CATCH BASIN, STORM SEWER, SANITARY SEWER, DRAINTILE, OR OTHER POTENTIAL SOURCE FOR CONTAMINATION SHALL BE INSTALLED AT LEAST 10 FEET HORIZONTALLY FROM ANY WATERMAIN PER MINNESOTA PLUMBING CODE. THIS ISOLATION DISTANCE SHALL BE MEASURED FROM THE OUTER EDGE OF THE PIPE TO THE OUTER EDGE OF THE CONTAMINATION SOURCE (OUTER EDGE OF STRUCTURES OR PIPING OR SIMILAR)
11. CONTRACTOR SHALL MAINTAIN DRAINAGE FROM EXISTING BUILDING AT ALL TIMES. PROVIDE TEMPORARY STORM SEWER (INCLUDING, BUT NOT LIMITED TO, CATCH BASINS, MANHOLES, PIPING, ETC.) AS REQUIRED. EXISTING STORM SEWER SHALL NOT BE REMOVED UNTIL TEMPORARY OR PERMANENT STORM SEWER IS INSTALLED AND FUNCTIONAL. COORDINATE ALL REMOVALS WITH APPROPRIATE TRADES (SITE UTILITY CONTRACTOR, MECHANICAL CONTRACTOR, ETC.) AS REQUIRED.
12. ALL GRADING AND CONSTRUCTION IN THE SMALL UTILITY EASEMENTS WILL NEED TO BE APPROVED AND COORDINATED WITH THE UTILITY PROVIDER.

| REV NO. | DATE | DESCRIPTION |
|---|---|---|
| 1 | 04/01/2025 | REVISION PER CITY REVIEW |
| 2 | 04/24/2025 | REVISION PER CITY REVIEW |
| 3 | 05/29/2025 | REVISION PER CITY & COUNTY REVIEW |

DATE: 05/29/2025
DESIGN BY: MJM
DRAWN BY: MJM
CHECKED BY: CJD
DWG FILE: GRADING
FILE NO.: 22-0030.00

I hereby certify that this plan, specification, or report was prepared by me or under my direct supervision and that I am a duly Licensed Professional Engineer under the laws of the State of Minnesota.

NOT FOR CONSTRUCTION

Signed: Christopher J. Dahn
Date: Lic. No. 58628

BOGART, PEDERSON & ASSOCIATES, INC.
LAND SURVEYING
CIVIL ENGINEERING
ENVIRONMENTAL SERVICES
13076 FIRST STREET, BECKER, MN 55308-9322
TEL. 763-262-3822 FAX: 763-262-3844

CEDAR RIDGE COMMUNITY LLC
CEDAR RIDGE COMMUNITY
City of North Branch, Chisago County, MN

NORTH GRADING PLAN

SHEET NO.
C3.1

5/29/2025 5:28 PM N:\Projects Current\22-0030.02 Belizer North Branch Plat\Civil\CAD Files\NB Grading.dwg

0' 50' 100'
SCALE: 1"=50'

## LEGEND:

| | |
|---|---|
| | PROPOSED RIP RAP |
| 980.50 TC | NEW TOP-BACK OF CURB ELEVATION |
| 980.50 FL | NEW FLOW LINE OF CURB ELEVATION |
| 980.50 SW | NEW SIDEWALK ELEVATION |
| 980.50 TP | NEW TOP OF PAVEMENT ELEVATION |
| 980.50 FG | NEW FINISHED GRADE ELEVATION |
| 980.50 EX | EXISTING ELEVATION |
| 984 | PROPOSED CONTOUR |
| | PROPOSED SLOPE |
| E.O.F. | EMERGENCY OVERFLOW |
| | PHASING LINE |

FB
G=913.0
LL=905.0
911.5

-HOUSE TYPE
-GARAGE ELEVATION
-LOWER LEVEL ELEVATION

FB: FULL BASEMENT
SOG: SLAB ON GRADE

-BACKYARD ELEVATION

## GRADING GENERAL NOTES:

1. THE CONTRACTOR SHALL NOTE ANY DISCREPANCIES BETWEEN EXISTING CONDITIONS IN THE FIELD REPRESENTED WITHIN THE PLANS AS SHOWN AND ALERT THE ENGINEER BEFORE BIDDING THE PROJECT AND BEGINNING CONSTRUCTION.
2. CONTRACTOR SHALL LOCATE AND VERIFY ALL UTILITIES WHICH MAY AFFECT THIS WORK AND NOTIFY THE OWNER OF ANY CHANGES. CONTACT LOCAL UTILITY COMPANIES FOR EXACT LOCATIONS PRIOR TO BIDDING THE PROJECT AND COMMENCING WORK.
3. CONTRACTOR SHALL TAKE NECESSARY PRECAUTIONS TO PREVENT SILT AND DEBRIS RUN-OFF DURING GRADING OPERATIONS (I.E. SILT FENCE, STRAW BALES, ETC.).
4. CONTRACTOR SHALL VERIFY CRITICAL ELEVATIONS TO ENSURE CONFORMANCE WITH GRADING PLAN, PARTICULARLY WITH EXISTING STRUCTURES AND/OR PAVEMENTS TO REMAIN. MEET EXISTING GRADES ALONG STREETS, PROPERTY LINES, AND DRIVEWAY ENTRANCES. RESTORE ALL PAVEMENTS THAT REMAIN TO THEIR ORIGINAL IF NOT BETTER CONDITION. NOTIFY OWNER OF ANY CONFLICTS PRIOR TO BIDDING THE PROJECT.
5. TURF ESTABLISHMENT AREAS SHALL RECEIVE MINIMUM OF 4" DEPTH AS MEASURED IN PLACE OF TOPSOIL. TOPSOIL SHALL BE FURNISHED AND INSTALLED BY THE CONTRACTOR. ALL GRADED SLOPES GREATER THAN OR EQUAL TO 5:1 SHALL BE HYDROSEEDED, EROSION CONTROL BLANKETED, OR MULCHED TO HELP STABILIZE THE SLOPES BY GENERAL CONTRACTOR.
6. PROPOSED SPOT ELEVATIONS ARE TO THE TOP OF CURB UNLESS NOTED OTHERWISE. ELEVATION OF FLOW LINE IS 6" BELOW TOP OF CURB UNLESS OTHERWISE SHOWN.
7. CONTRACTOR SHALL BE SOLELY RESPONSIBLE FOR DETERMINING QUANTITIES OF CUT, FILL AND WASTE MATERIALS TO BE HANDLED, AND FOR AMOUNT OF GRADING TO BE DONE IN ORDER TO COMPLETELY PERFORM ALL WORK INDICATED ON THE DRAWINGS. IMPORT SUITABLE MATERIAL AND EXPORT UNSUITABLE / EXCESS / WASTE MATERIAL AS REQUIRED. ALL COSTS ASSOCIATED WITH IMPORTING AND EXPORTING MATERIALS SHALL BE INCIDENTAL TO THE CONTRACT.
8. IT IS INTENDED THAT EARTHWORK (CUT VS. FILL) WILL NOT BALANCE ON SITE. THE CONTRACTOR SHALL SUBMIT THE QUANTITY OF MATERIAL AND AMOUNT OF ANTICIPATED GRADE ADJUSTMENT FOR REVIEW BY THE ENGINEER A MINIMUM OF FOUR WEEKDAYS PRIOR TO MAKING ADJUSTMENTS. ALL GRADE ADJUSTMENTS MUST BE APPROVED BY THE ENGINEER. NO ADDITIONAL COMPENSATION SHALL BE ALLOWED FOR WORK ASSOCIATED WITH GRADING ADJUSTMENTS, INCLUDING, BUT NOT LIMITED TO, EARTHWORK OPERATIONS, STORM SEWER PIPING AND STRUCTURE ADJUSTMENTS, CONSTRUCTION SURVEYING FOR ADJUSTING FEATURE LOCATIONS ACCORDINGLY, SILT FENCE, ETC.
9. FAILURE OF TURF DEVELOPMENT: IN THE EVENT THE CONTRACTOR FAILS TO PROVIDE AN ACCEPTABLE TURF, THE CONTRACTOR SHALL RE-SEED OR RE-SOD ALL APPLICABLE AREAS, AT NO ADDITIONAL COST TO THE OWNER, TO THE SATISFACTION OF THE ENGINEER.
10. ANY MANHOLE, CATCH BASIN, STORM SEWER, SANITARY SEWER, DRAINTILE, OR OTHER POTENTIAL SOURCE FOR CONTAMINATION SHALL BE INSTALLED AT LEAST 10 FEET HORIZONTALLY FROM ANY WATERMAIN PER MINNESOTA PLUMBING CODE. THIS ISOLATION DISTANCE SHALL BE MEASURED FROM THE OUTER EDGE OF THE PIPE TO THE OUTER EDGE OF THE CONTAMINATION SOURCE (OUTER EDGE OF STRUCTURES OR PIPING OR SIMILAR)
11. CONTRACTOR SHALL MAINTAIN DRAINAGE FROM EXISTING BUILDING AT ALL TIMES. PROVIDE TEMPORARY STORM SEWER (INCLUDING, BUT NOT LIMITED TO, CATCH BASINS, MANHOLES, PIPING, ETC.) AS REQUIRED. EXISTING STORM SEWER SHALL NOT BE REMOVED UNTIL TEMPORARY OR PERMANENT STORM SEWER IS INSTALLED AND FUNCTIONAL. COORDINATE ALL REMOVALS WITH APPROPRIATE TRADES (SITE UTILITY CONTRACTOR, MECHANICAL CONTRACTOR, ETC.) AS REQUIRED.
12. ALL GRADING AND CONSTRUCTION IN THE SMALL UTILITY EASEMENTS WILL NEED TO BE APPROVED AND COORDINATED WITH THE UTILITY PROVIDER.

| REV NO. | DATE | DESCRIPTION |
|---|---|---|
| 1 | 04/01/2025 | REVISION PER CITY REVIEW |
| 2 | 04/24/2025 | REVISION PER CITY REVIEW |
| 3 | 05/29/2025 | REVISION PER CITY & COUNTY REVIEW |

DATE: 05/29/2025
DESIGN BY: MJM
DRAWN BY: MJM
CHECKED BY: CJD
DWG FILE: GRADING
FILE NO.: 22-0030.00

I hereby certify that this plan, specification, or report was prepared by me or under my direct supervision and that I am a duly Licensed Professional Engineer under the laws of the State of Minnesota.

Signed: Christopher J. Dahn
Date: Lic. No. 58628

NOT FOR CONSTRUCTION

BOGART, PEDERSON & ASSOCIATES, INC.
LAND SURVEYING
CIVIL ENGINEERING
ENVIRONMENTAL SERVICES
13076 FIRST STREET, BECKER, MN 55308-9322
TEL: 763-262-9822 FAX: 763-262-9844

CEDAR RIDGE COMMUNITY LLC
CEDAR RIDGE COMMUNITY
City of North Branch, Chisago County, MN

SOUTH GRADING PLAN

SHEET NO.
C3.2

N:\Projects Current\22-0030.02 Belzer North Branch Plat\Civil\CAD Files\NB Grading.dwg
5/29/2025 5:28 PM

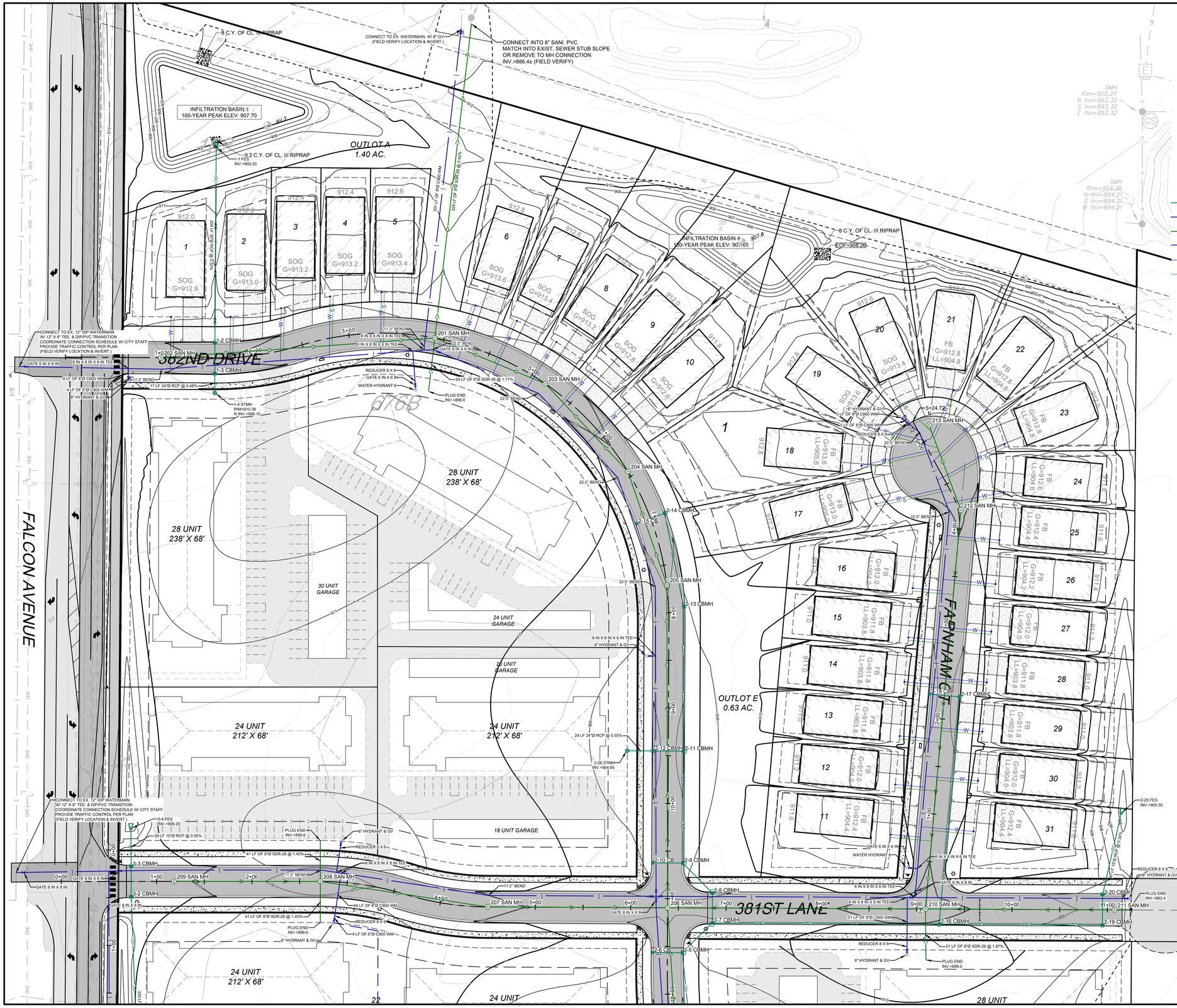


0' 50' 100'
SCALE: 1"=50'

## LEGEND:

- PROPOSED STORM SEWER
- PROPOSED WATER LINE
- PROPOSED SANITARY SEWER
- PROPOSED FITTING
- PROPOSED WATER SERVICE
- PROPOSED SANITARY SERVICE
- PROPOSED SANITARY MANHOLE
- PROPOSED FLARED END SECITON
- PROPOSED STORM MANHOLE
- PROPOSED CATCH BASIN
- PROPOSED GATE VALVE & BOX
- PROPOSED HYDRANT
- PROPOSED CLEANOUT
- PROPOSED RIP RAP
- PHASING LINE

## UTILITY GENERAL NOTES:

1. CONTRACTOR SHALL BE RESPONSIBLE FOR COORDINATING ALL UTILITY RELOCATIONS.
2. CONTRACTOR SHALL LOCATE AND VERIFY ALL UTILITIES WHICH MAY AFFECT THIS WORK AND NOTIFY OWNER OF ANY CHANGES. CONTACT LOCAL UTILITY COMPANIES FOR EXACT LOCATIONS PRIOR TO BIDDING THE PROJECT AND COMMENCING WORK.
3. CONTRACTOR SHALL VERIFY CRITICAL ELEVATIONS TO ENSURE CONFORMANCE WITH GRADING PLAN AND EXISTING UTILITIES, PARTICULARLY WITH EXISTING STRUCTURES AND/OR PAVEMENTS TO REMAIN.
4. THE CONTRACTOR SHALL NOTE ANY DISCREPANCIES BETWEEN EXISTING CONDITIONS AS EXISTING IN THE FIELD AND AS REPRESENTED WITHIN THE PLANS AS SHOWN AND ALERT THE ENGINEER BEFORE BIDDING THE PROJECT AND BEGINNING CONSTRUCTION.
5. WATER LINE TO MINIMUM 8.0 FEET DEPTH.
6. VERIFY INVERT ELEVATIONS OF EXISTING SANITARY LINE AT POINT OF CONNECTION WITH NEW SANITARY LINE PRIOR TO INSTALLING ANY NEW UTILITIES.
7. ALL CROSSING ELEVATIONS OF NEW UTILITIES & SIZES OF THE EXISTING UTILITIES ARE BASED ON ASSUMED ELEVATIONS AND SIZES PROVIDED BY THE SURVEY.
8. ALL SANITARY SERVICE PIPE AND FITTINGS WILL BE SCHDULE 40.
9. ALL STORM SEWER SHALL BE PVC SCHEDULE 40 WHEN LESS THAN 8" IN DIAMETER. ALL RCP STORM SEWER SHALL BE CLASS V PIPE UNLESS OTHERWISE NOTED. ALL HDPE STORM SEWER SHALL BE DUAL WALL HIGH PERFORMANCE POLYPROPYLENE PIPE AND SHALL CONFORM TO AASHTO M330.
10. ALL WATER LINES 4" OR GREATER SHALL CONFORM TO AWWA C900 OR GRADE PE-3408 OR GRADE PE4710 PIPE AND SHALL BE RATED FOR 200 PSI. ALL WATER LINES LESS THAT 4" SHALL CONFORM TO AWWA C901 SIDR 7 (HDPE WATER LINE) OR TYPE K COPPER PIPE.
11. THE CONTRACTOR SHALL BE RESPONSIBLE FOR OBTAINING TWO CONSECUTIVE PASSING BACTERIOLOGICAL TESTS FROM THE PROPOSED WATER SERVICE.
12. THE APPLICANT SHALL BE RESPONSIBLE FOR REPLACING ANY CONCRETE PAVEMENT WHICH IS DAMAGED OR REMOVED AS A RESULT OF THE PROPOSED WATER, SANITARY, STORM SEWER SERVICE INSTALLATION.
13. IF DEWATERING IS REQUIRED FOR THIS PROJECT, THE PUMP DISCHARGE SHALL BE TREATED PRIOR TO BEING DISCHARGED OFF-SITE OR INTO A SURFACE WATER. THE DISCHARGE SHALL BE VISUALLY CHECKED TO ENSURE THAT IT IS VISIBLY CLEAN WATER. NO DEWATERING IS EXPECTED FOR THIS SITE DUE TO SANDY SOIL CONDITIONS.
14. ALL EXISTING CASTINGS FOR SANITARY SEWER AND STORM STRUCTURES WITHIN PROPOSED WORK AREAS THAT ARE WITHIN THE CITY RIGHT OF WAY WILL BE REPLACED WITH TYPE A OR TYPE E CASTINGS AS SHOWN ON APPLICABLE CITY STD. PLATE STRT-14. ALL ADJUSTING RINGS WILL BE REPLACED WITH HDPE ADJUSTING RINGS.
15. CONTRACTOR SHALL PROVIDE TRAFFIC CONTROL PLAN FOR PAVEMENT REMOVAL, UTILITY INSTALLATION, AND REPLACEMENT AS NEEDED.
16. SANITARY SERVICE RISER PIPE SHALL BE OUTSIDE OF THE ROAD RIGHT OF WAY. RISERS SHALL BE PLACED ON THE PROPERTY LINE IF REQUIRED. SEE DETAIL SAN-001.

| REV NO. | DATE | DESCRIPTION |
|---|---|---|
| 1 | 04/01/2025 | REVISION PER CITY REVIEW |
| 2 | 04/24/2025 | REVISION PER CITY REVIEW |
| 3 | 05/29/2025 | REVISION PER CITY & COUNTY REVIEW |

DATE: 05/29/2025
DESIGN BY: MJM
DRAWN BY: MJM
CHECKED BY: CJD
DWG FILE: UTILITY
FILE NO.: 22-0030.00

I hereby certify that this plan, specification, or report was prepared by me or under my direct supervision and that I am a duly Licensed Professional Engineer under the laws of the State of Minnesota.

Signed: Christopher J. Dahn
Date: Lic. No. 58628

NOT FOR CONSTRUCTION


BOGART, PEDERSON & ASSOCIATES, INC.
LAND SURVEYING
CIVIL ENGINEERING
ENVIRONMENTAL SERVICES
13076 FIRST STREET, BLOOMER, MN 55308-9322
TEL: 763-262-9222 FAX: 763-262-9944


CEDAR RIDGE COMMUNITY LLC
CEDAR RIDGE COMMUNITY
City of North Branch, Chisago County, MN

NORTH UTILITY PLAN

SHEET NO.
C4.1

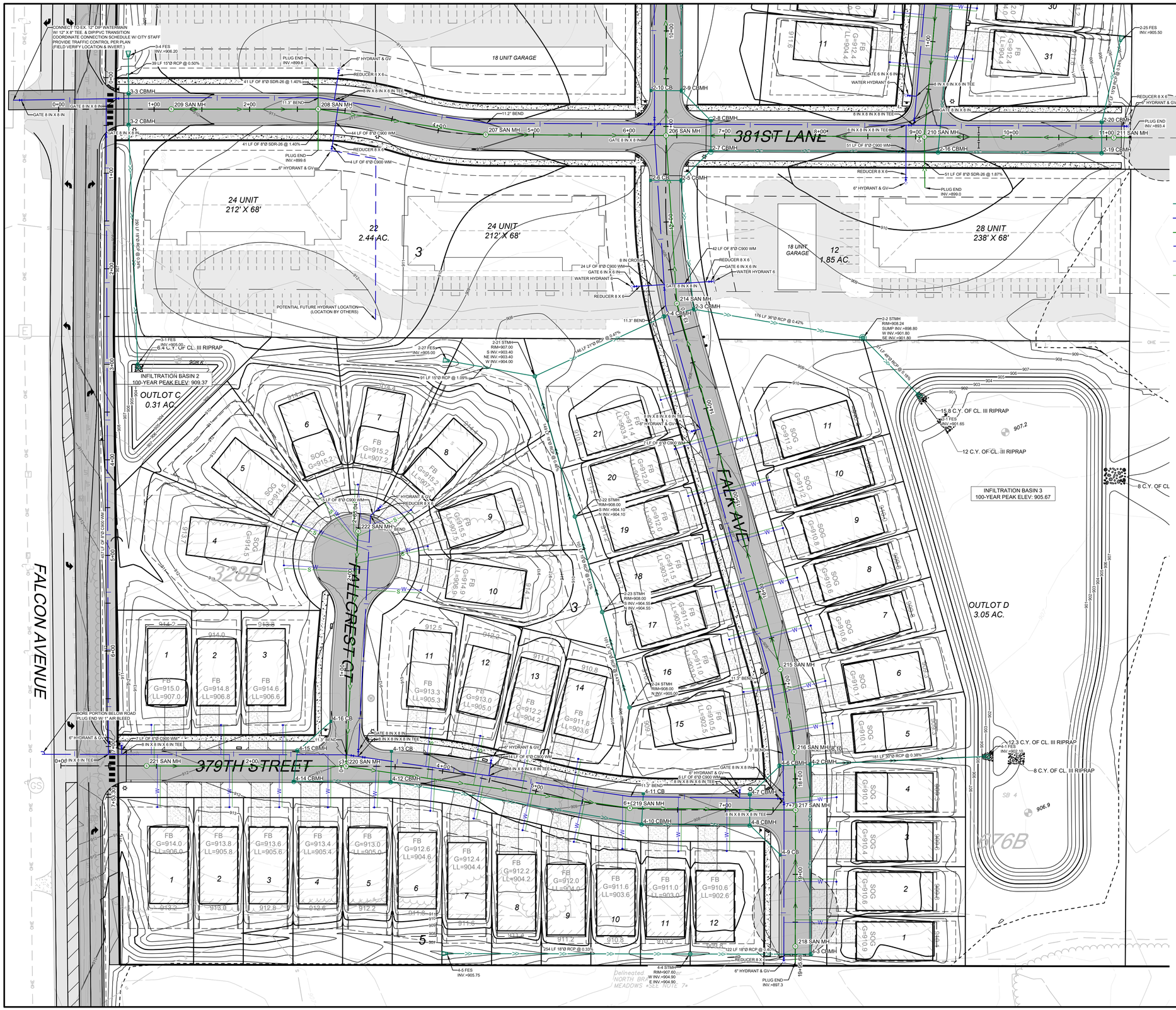


# LEGEND:

- PROPOSED STORM SEWER
- PROPOSED WATER LINE
- PROPOSED SANITARY SEWER
- PROPOSED FITTING
- PROPOSED WATER SERVICE
- PROPOSED SANITARY SERVICE
- PROPOSED SANITARY MANHOLE
- PROPOSED FLARED END SECITON
- PROPOSED STORM MANHOLE
- PROPOSED CATCH BASIN
- PROPOSED GATE VALVE & BOX
- PROPOSED HYDRANT
- PROPOSED CLEANOUT
- PROPOSED RIP RAP
- PHASING LINE

# UTILITY GENERAL NOTES:

1. CONTRACTOR SHALL BE RESPONSIBLE FOR COORDINATING ALL UTILITY RELOCATIONS.
2. CONTRACTOR SHALL LOCATE AND VERIFY ALL UTILITIES WHICH MAY AFFECT THIS WORK AND NOTIFY OWNER OF ANY CHANGES. CONTACT LOCAL UTILITY COMPANIES FOR EXACT LOCATIONS PRIOR TO BIDDING THE PROJECT AND COMMENCING WORK.
3. CONTRACTOR SHALL VERIFY CRITICAL ELEVATIONS TO ENSURE CONFORMANCE WITH GRADING PLAN AND EXISTING UTILITIES, PARTICULARLY WITH EXISTING STRUCTURES AND/OR PAVEMENTS TO REMAIN.
4. THE CONTRACTOR SHALL NOTE ANY DISCREPANCIES BETWEEN EXISTING CONDITIONS AS EXISTING IN THE FIELD AND AS REPRESENTED WITHIN THE PLANS AS SHOWN AND ALERT THE ENGINEER BEFORE BIDDING THE PROJECT AND BEGINNING CONSTRUCTION.
5. WATER LINE TO MINIMUM 8.0 FEET DEPTH.
6. VERIFY INVERT ELEVATIONS OF EXISTING SANITARY LINE AT POINT OF CONNECTION WITH NEW SANITARY LINE PRIOR TO INSTALLING ANY NEW UTILITIES.
7. ALL CROSSING ELEVATIONS OF NEW UTILITIES & SIZES OF THE EXISTING UTILITIES ARE BASED ON ASSUMED ELEVATIONS AND SIZES PROVIDED BY THE SURVEY.
8. ALL SANITARY SERVICE PIPE AND FITTINGS WILL BE SCHDULE 40.
9. ALL STORM SEWER SHALL BE PVC SCHEDULE 40 WHEN LESS THAN 8" IN DIAMETER. ALL RCP STORM SEWER SHALL BE CLASS V PIPE UNLESS OTHERWISE NOTED. ALL HDPE STORM SEWER SHALL BE DUAL WALL HIGH PERFORMANCE POLYPROPYLENE PIPE AND SHALL CONFORM TO AASHTO M330.
10. ALL WATER LINES 4" OR GREATER SHALL CONFORM TO AWWA C900 OR GRADE PE-3408 OR GRADE PE4710 PIPE AND SHALL BE RATED FOR 200 PSI. ALL WATER LINES LESS THAT 4" SHALL CONFORM TO AWWA C901 SIDR 7 (HDPE WATER LINE) OR TYPE K COPPER PIPE.
11. THE CONTRACTOR SHALL BE RESPONSIBLE FOR OBTAINING TWO CONSECUTIVE PASSING BACTERIOLOGICAL TESTS FROM THE PROPOSED WATER SERVICE.
12. THE APPLICANT SHALL BE RESPONSIBLE FOR REPLACING ANY CONCRETE PAVEMENT WHICH IS DAMAGED OR REMOVED AS A RESULT OF THE PROPOSED WATER, SANITARY, STORM SEWER SERVICE INSTALLATION.
13. IF DEWATERING IS REQUIRED FOR THIS PROJECT, THE PUMP DISCHARGE SHALL BE TREATED PRIOR TO BEING DISCHARGED OFF-SITE OR INTO A SURFACE WATER. THE DISCHARGE SHALL BE VISUALLY CHECKED TO ENSURE THAT IT IS VISIBLY CLEAN WATER. NO DEWATERING IS EXPECTED FOR THIS SITE DUE TO SANDY SOIL CONDITIONS.
14. ALL EXISTING CASTINGS FOR SANITARY SEWER AND STORM STRUCTURES WITHIN PROPOSED WORK AREAS THAT ARE WITHIN THE CITY RIGHT OF WAY WILL BE REPLACED WITH TYPE A OR TYPE E CASTINGS AS SHOWN ON APPLICABLE CITY STD. PLATE STRT-14. ALL ADJUSTING RINGS WILL BE REPLACED WITH HDPE ADJUSTING RINGS.
15. CONTRACTOR SHALL PROVIDE TRAFFIC CONTROL PLAN FOR PAVEMENT REMOVAL, UTILITY INSTALLATION, AND REPLACEMENT AS NEEDED.
16. SANITARY SERVICE RISER PIPE SHALL BE OUTSIDE OF THE ROAD RIGHT OF WAY. RISERS SHALL BE PLACED ON THE PROPERTY LINE IF REQUIRED. SEE DETAIL SAN-001.

| REV NO. | DATE | DESCRIPTION |
|---|---|---|
| 1 | 04/01/2025 | REVISION PER CITY REVIEW |
| 2 | 04/24/2025 | REVISION PER CITY REVIEW |
| 3 | 05/29/2025 | REVISION PER CITY & COUNTY REVIEW |

DATE: 05/29/2025
DESIGN BY: MJM
DRAWN BY: MJM
CHECKED BY: CJD
DWG FILE: UTILITY
FILE NO.: 22-0030.00

I hereby certify that this plan, specification, or report was prepared by me or under my direct supervision and that I am a duly Licensed Professional Engineer under the laws of the State of Minnesota.

Signed: Christopher J. Dahn
Date: Lic. No. 58628

NOT FOR CONSTRUCTION

BOGART, PEDERSON & ASSOCIATES, INC.
LAND SURVEYING
CIVIL ENGINEERING
ENVIRONMENTAL SERVICES
13079 FIRST STREET, BECKER, MN 55308-9322
TEL: 763-262-3622 FAX: 763-262-3644

CEDAR RIDGE COMMUNITY LLC
CEDAR RIDGE COMMUNITY
City of North Branch, Chisago County, MN

SOUTH UTILITY PLAN

SHEET NO.
C4.2

## LEGEND:

- PROPOSED RIP RAP
- 984 PROPOSED CONTOUR
- PROPOSED STORM SEWER
- PROPOSED WATER LINE
- PROPOSED SANITARY SEWER
- PROPOSED WATER SERVICE
- PROPOSED SANITARY SERVICE
- PROPOSED CATCH BASIN
- PROPOSED FLARED END SECITON
- PROPOSED STORM MANHOLE
- PROPOSED GATE VALVE & BOX
- PROPOSED HYDRANT
- PROPOSED SANITARY MANHOLE

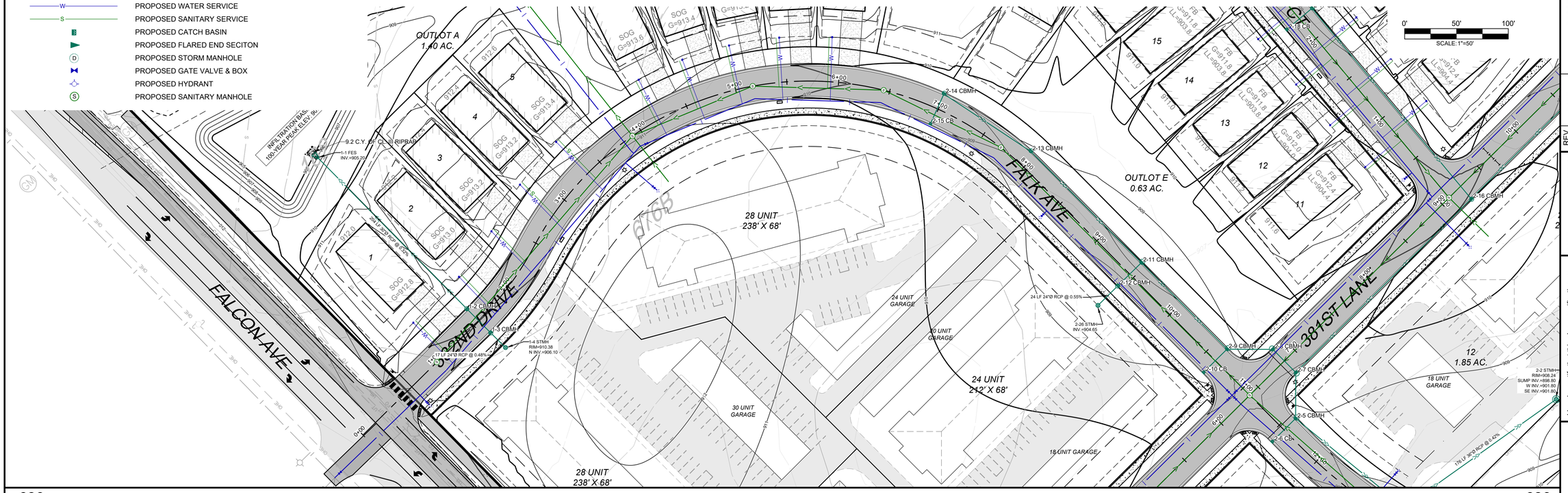


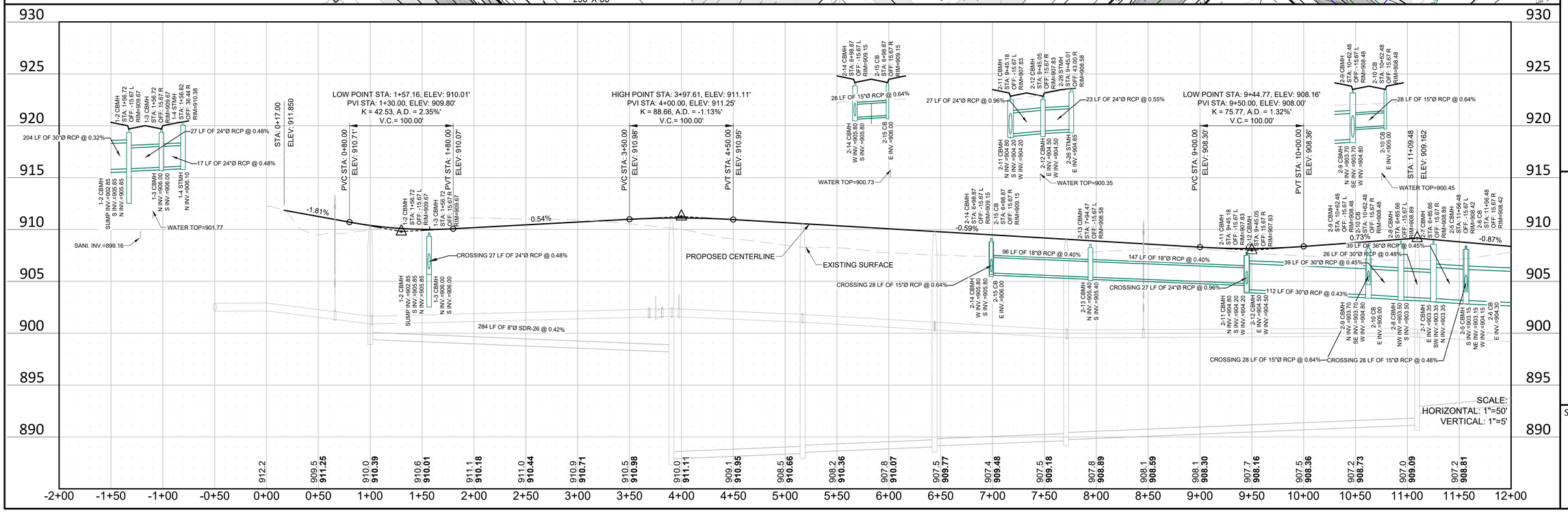


| REV NO. | DATE | DESCRIPTION |
|---|---|---|
| 1 | 04/01/2025 | REVISION PER CITY REVIEW |
| 2 | 04/24/2025 | REVISION PER CITY REVIEW |
| 3 | 05/29/2025 | REVISION PER CITY & COUNTY REVIEW |

DATE: 05/29/2025
DESIGN BY: MJM
DRAWN BY: MJM
CHECKED BY: CJD
DWG FILE: GRADING
FILE NO.: 22-0030.00

I hereby certify that this plan, specification, or report was prepared by me or under my direct supervision and that I am a duly Licensed Professional Engineer under the laws of the State of Minnesota.

NOT FOR CONSTRUCTION

Signed: Christopher J. Dahn
Date: Lic. No. 58628


BOGART, PEDERSON & ASSOCIATES, INC.
LAND SURVEYING
CIVIL ENGINEERING
ENVIRONMENTAL SERVICES
13076 FIRST STREET, BECKER, MN 55308-9322
TEL: 763-262-9002 FAX: 763-262-9044


CEDAR RIDGE COMMUNITY LLC
CEDAR RIDGE COMMUNITY
City of North Branch, Chisago County, MN

382ND & FALK AVE (STREET & STORM)

SHEET NO.
C5.1

N:\Projects Current\22-0030.00 Becker North Branch Plat\Civil\CAD Files\NB Utility.dwg 5/29/2025 5:27 PM

## LEGEND:

- PROPOSED RIP RAP
- 984 PROPOSED CONTOUR
- PROPOSED STORM SEWER
- PROPOSED WATER LINE
- PROPOSED SANITARY SEWER
- W PROPOSED WATER SERVICE
- S PROPOSED SANITARY SERVICE
- PROPOSED CATCH BASIN
- PROPOSED FLARED END SECITON
- D PROPOSED STORM MANHOLE
- PROPOSED GATE VALVE & BOX
- PROPOSED HYDRANT
- S PROPOSED SANITARY MANHOLE

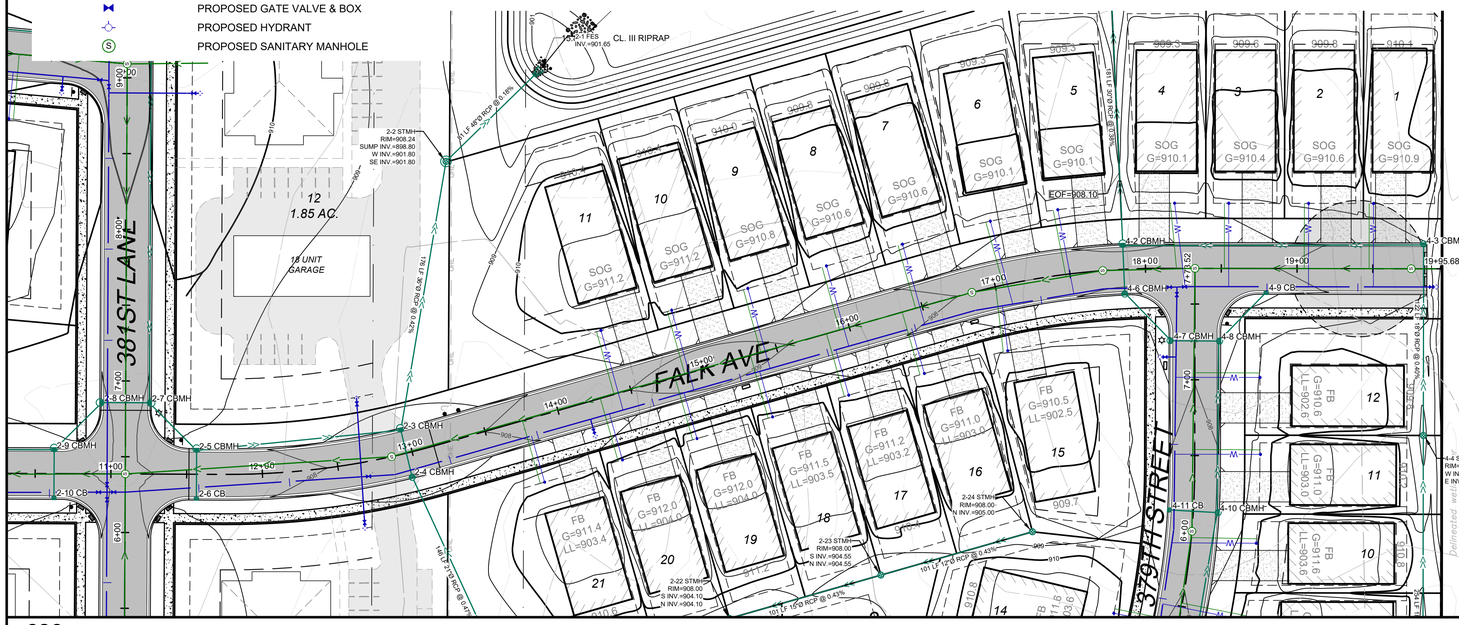


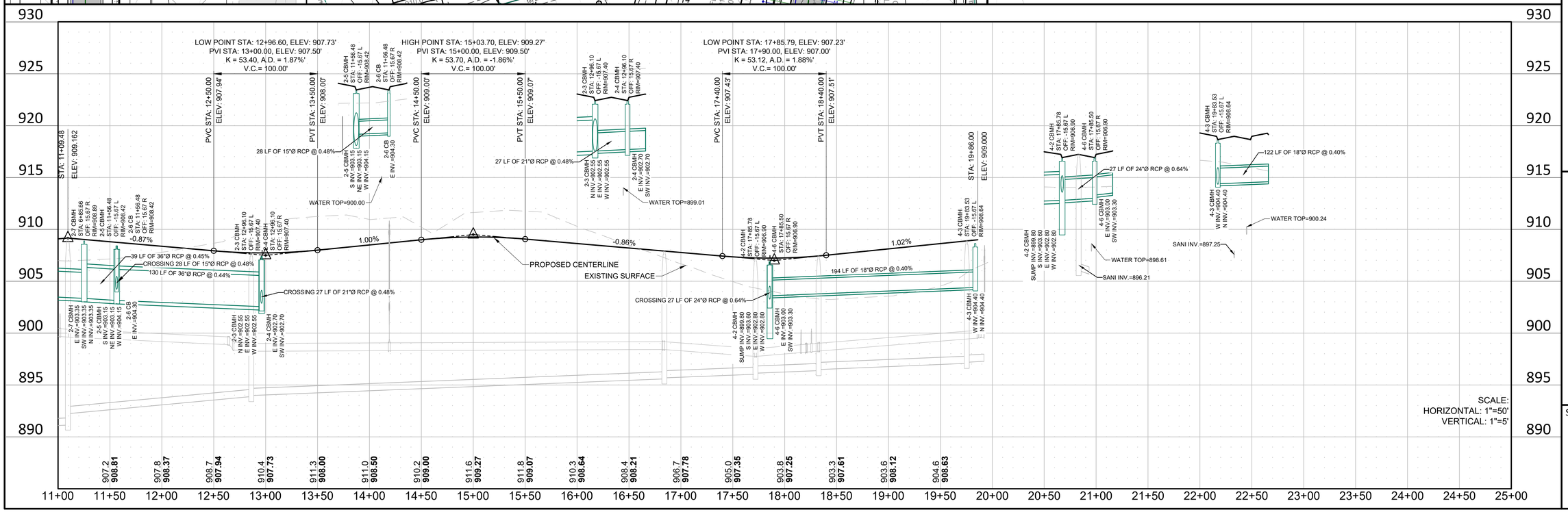


0' 50' 100'
SCALE: 1"=50'

| REV NO. | DATE | DESCRIPTION |
|---|---|---|
| 1 | 04/01/2025 | REVISION PER CITY REVIEW |
| 2 | 04/24/2025 | REVISION PER CITY REVIEW |
| 3 | 05/29/2025 | REVISION PER CITY & COUNTY REVIEW |

DATE: 05/29/2025
DESIGN BY: MJM
DRAWN BY: MJM
CHECKED BY: CJD
DWG FILE: GRADING
FILE NO.: 22-0030.00

I hereby certify that this plan, specification, or report was prepared by me or under my direct supervision and that I am a duly Licensed Professional Engineer under the laws of the State of Minnesota.

NOT FOR CONSTRUCTION

Signed: Christopher J. Dahn
Date: Lic. No. 58628


BOGART, PEDERSON & ASSOCIATES, INC.
LAND SURVEYING
CIVIL ENGINEERING
ENVIRONMENTAL SERVICES
13076 FIRST STREET, BECKER, MN 55308-9322
TEL: 763-262-9822 FAX: 763-262-9844


CEDAR RIDGE COMMUNITY LLC
CEDAR RIDGE COMMUNITY
City of North Branch, Chisago County, MN

FALK AVE (STREET & STORM)

SHEET NO.
C5.2

N:\Projects Current\22-0030.02 Becker North Branch Plat\Civil\CAD Files\NB Utility.dwg 5/28/2025 5:28 PM

## LEGEND:

- PROPOSED RIP RAP
- 984 PROPOSED CONTOUR
- PROPOSED STORM SEWER
- PROPOSED WATER LINE
- PROPOSED SANITARY SEWER
- W PROPOSED WATER SERVICE
- S PROPOSED SANITARY SERVICE
- PROPOSED CATCH BASIN
- PROPOSED FLARED END SECITON
- D PROPOSED STORM MANHOLE
- PROPOSED GATE VALVE & BOX
- PROPOSED HYDRANT
- S PROPOSED SANITARY MANHOLE

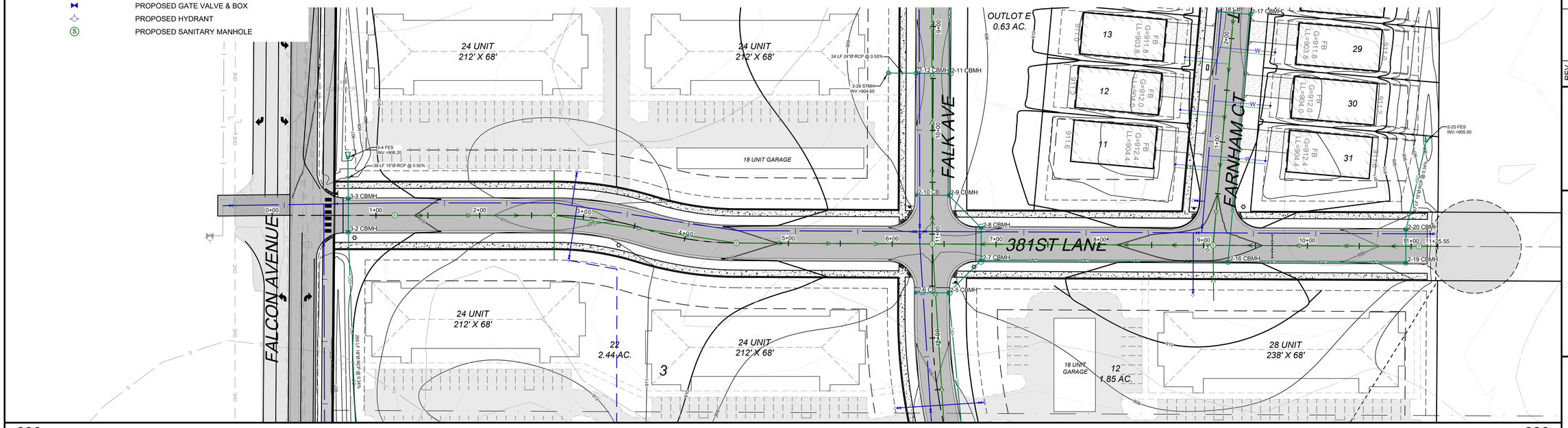


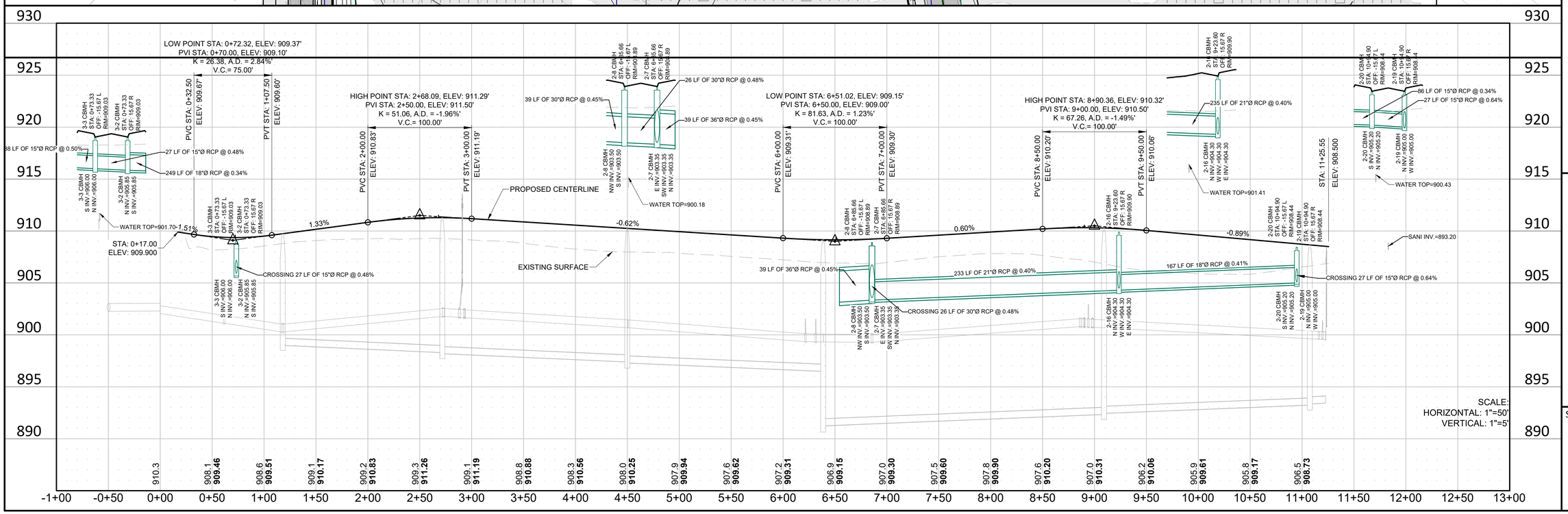


| REV NO. | DATE | DESCRIPTION |
|---|---|---|
| 1 | 04/01/2025 | REVISION PER CITY REVIEW |
| 2 | 04/24/2025 | REVISION PER CITY REVIEW |
| 3 | 05/29/2025 | REVISION PER CITY & COUNTY REVIEW |

DATE: 05/29/2025
DESIGN BY: M.J.M
DRAWN BY: M.J.M
CHECKED BY: C.J.D
DWG FILE: GRADING
FILE NO.: 22-0030.00

I hereby certify that this plan, specification, or report was prepared by me or under my direct supervision and that I am a duly Licensed Professional Engineer under the laws of the State of Minnesota.

NOT FOR CONSTRUCTION

Signed: Christopher J. Dahn
Date: Lic. No. 58628


BOGART, PEDERSON & ASSOCIATES, INC.
LAND SURVEYING
CIVIL ENGINEERING
ENVIRONMENTAL SERVICES
13076 FIRST STREET, BECKER, MN 55308-9322
TEL: 763-262-5822 FAX: 763-262-5844


CEDAR RIDGE COMMUNITY LLC
CEDAR RIDGE COMMUNITY
City of North Branch, Chisago County, MN

381ST LANE (STREET & STORM)

SHEET NO.
C5.3

## LEGEND:

- PROPOSED RIP RAP
- 984 PROPOSED CONTOUR
- PROPOSED STORM SEWER
- PROPOSED WATER LINE
- PROPOSED SANITARY SEWER
- W PROPOSED WATER SERVICE
- S PROPOSED SANITARY SERVICE
- PROPOSED CATCH BASIN
- PROPOSED FLARED END SECITON
- D PROPOSED STORM MANHOLE
- PROPOSED GATE VALVE & BOX
- PROPOSED HYDRANT
- S PROPOSED SANITARY MANHOLE

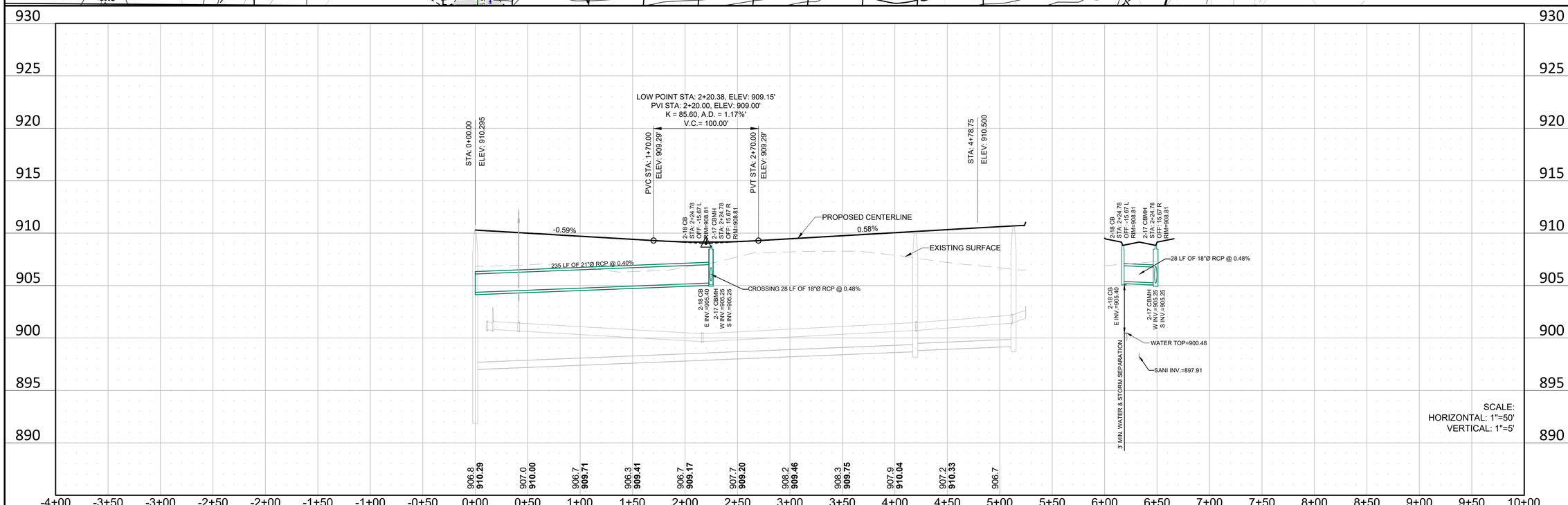


| REV NO. | DATE | DESCRIPTION |
|---|---|---|
| 1 | 04/01/2025 | REVISION PER CITY REVIEW |
| 2 | 04/24/2025 | REVISION PER CITY REVIEW |
| 3 | 05/29/2025 | REVISION PER CITY & COUNTY REVIEW |

DATE: 05/29/2025
DESIGN BY: MJM
DRAWN BY: MJM
CHECKED BY: CJD
DWG FILE: GRADING
FILE NO.: 22-0030.00

I hereby certify that this plan, specification, or report was prepared by me or under my direct supervision and that I am a duly Licensed Professional Engineer under the laws of the State of Minnesota.

NOT FOR CONSTRUCTION

Signed: Christopher J. Dahn
Date: Lic. No. 58628


BOGART, PEDERSON & ASSOCIATES, INC.
LAND SURVEYING
CIVIL ENGINEERING
ENVIRONMENTAL SERVICES
13076 FIRST STREET, BECKER, MN 55308-9322
TEL: 763-262-9822 FAX: 763-262-9844


CEDAR RIDGE COMMUNITY LLC
CEDAR RIDGE COMMUNITY
City of North Branch, Chisago County, MN

FARNHAM CT (STREET & STORM)

SHEET NO.
C5.4

N:\Projects Current\22-0030.02 Becker North Branch Plat\Civil\CAD Files\NB Utility.dwg
5/28/2025 5:28 PM

## LEGEND:

- PROPOSED RIP RAP
- 984 PROPOSED CONTOUR
- PROPOSED STORM SEWER
- PROPOSED WATER LINE
- PROPOSED SANITARY SEWER
- W PROPOSED WATER SERVICE
- S PROPOSED SANITARY SERVICE
- PROPOSED CATCH BASIN
- PROPOSED FLARED END SECITON
- D PROPOSED STORM MANHOLE
- PROPOSED GATE VALVE & BOX
- PROPOSED HYDRANT
- S PROPOSED SANITARY MANHOLE

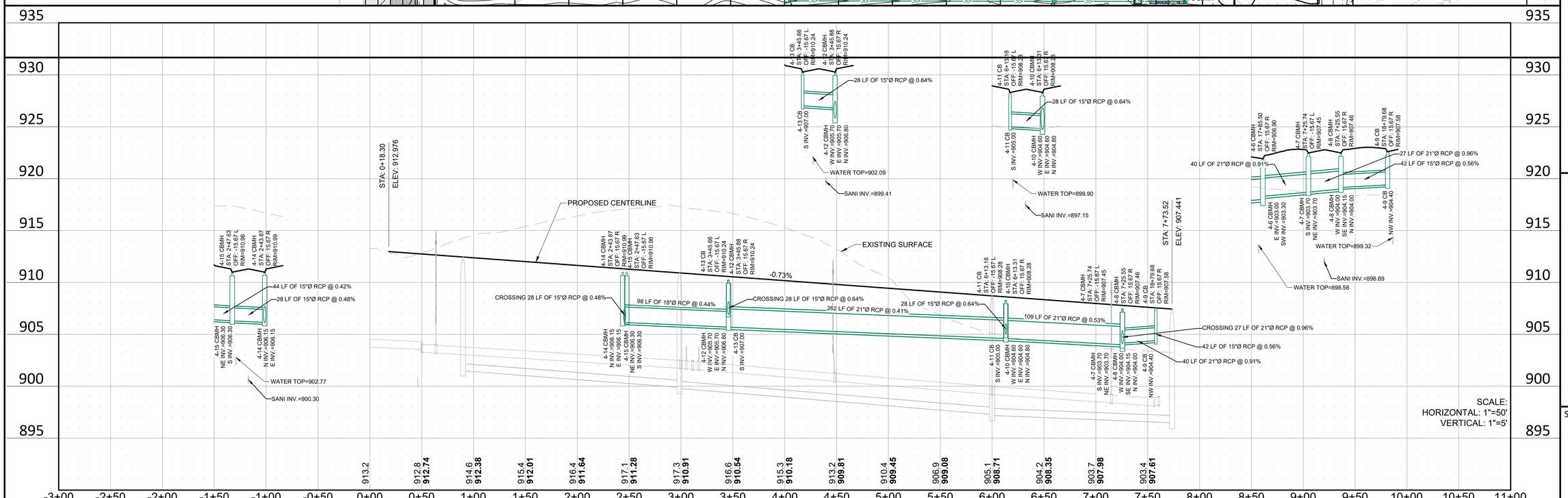


| REV NO. | DATE | DESCRIPTION |
|---|---|---|
| 1 | 04/01/2025 | REVISION PER CITY REVIEW |
| 2 | 04/24/2025 | REVISION PER CITY REVIEW |
| 3 | 05/29/2025 | REVISION PER CITY & COUNTY REVIEW |

DATE: 05/29/2025
DESIGN BY: MJM
DRAWN BY: MJM
CHECKED BY: CJD
DWG FILE: GRADING
FILE NO.: 22-0030.00

I hereby certify that this plan, specification, or report was prepared by me or under my direct supervision and that I am a duly Licensed Professional Engineer under the laws of the State of Minnesota.

Signed: Christopher J. Dahn
Date: Lic. No. 58628

NOT FOR CONSTRUCTION


BOGART, PEDERSON & ASSOCIATES, INC.
LAND SURVEYING
CIVIL ENGINEERING
ENVIRONMENTAL SERVICES
13076 FIRST STREET, BECKER, MN 55308-9322
TEL: 763-262-9822 FAX: 763-262-9844


CEDAR RIDGE COMMUNITY LLC
CEDAR RIDGE COMMUNITY
City of North Branch, Chisago County, MN

379TH STREET (STREET & STORM)

SHEET NO.
C5.5

N:\Projects Current\22-0030.02 Bedden North Branch Plat\Civil\CAD Files\NB Utility.dwg
5/28 PM
5/28/2025

## LEGEND:

- PROPOSED RIP RAP
- 984 PROPOSED CONTOUR
- PROPOSED STORM SEWER
- PROPOSED WATER LINE
- PROPOSED SANITARY SEWER
- W PROPOSED WATER SERVICE
- S PROPOSED SANITARY SERVICE
- PROPOSED CATCH BASIN
- PROPOSED FLARED END SECITON
- D PROPOSED STORM MANHOLE
- PROPOSED GATE VALVE & BOX
- PROPOSED HYDRANT
- S PROPOSED SANITARY MANHOLE

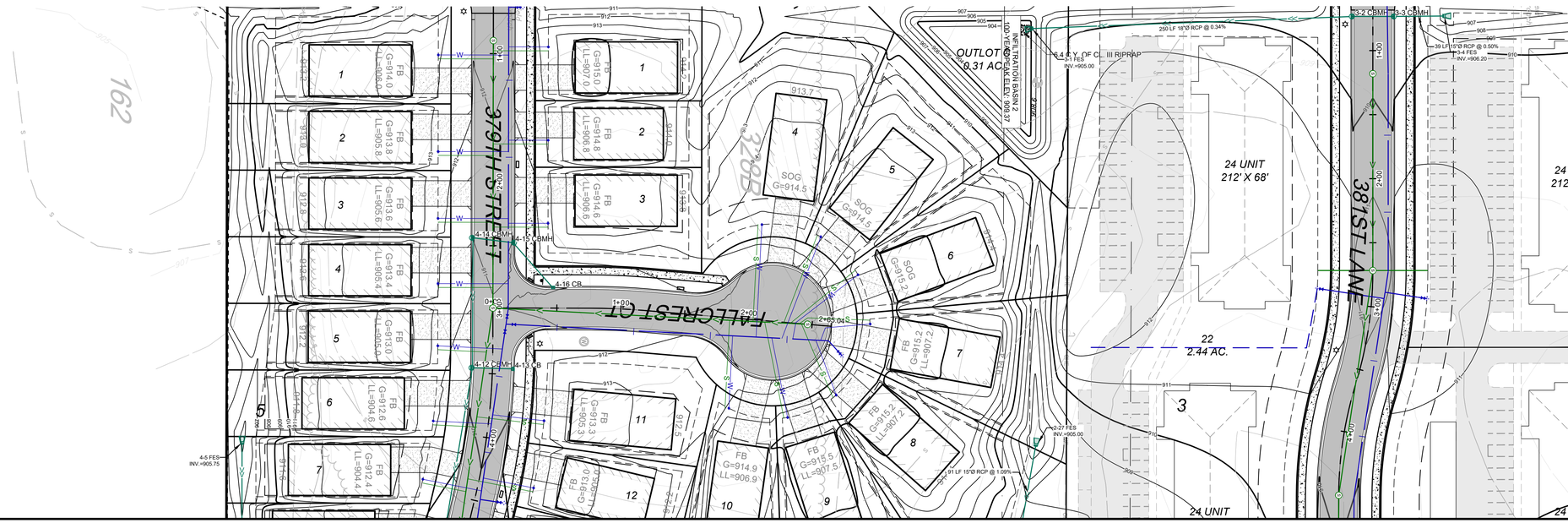


0' 50' 100'
SCALE: 1"=50'

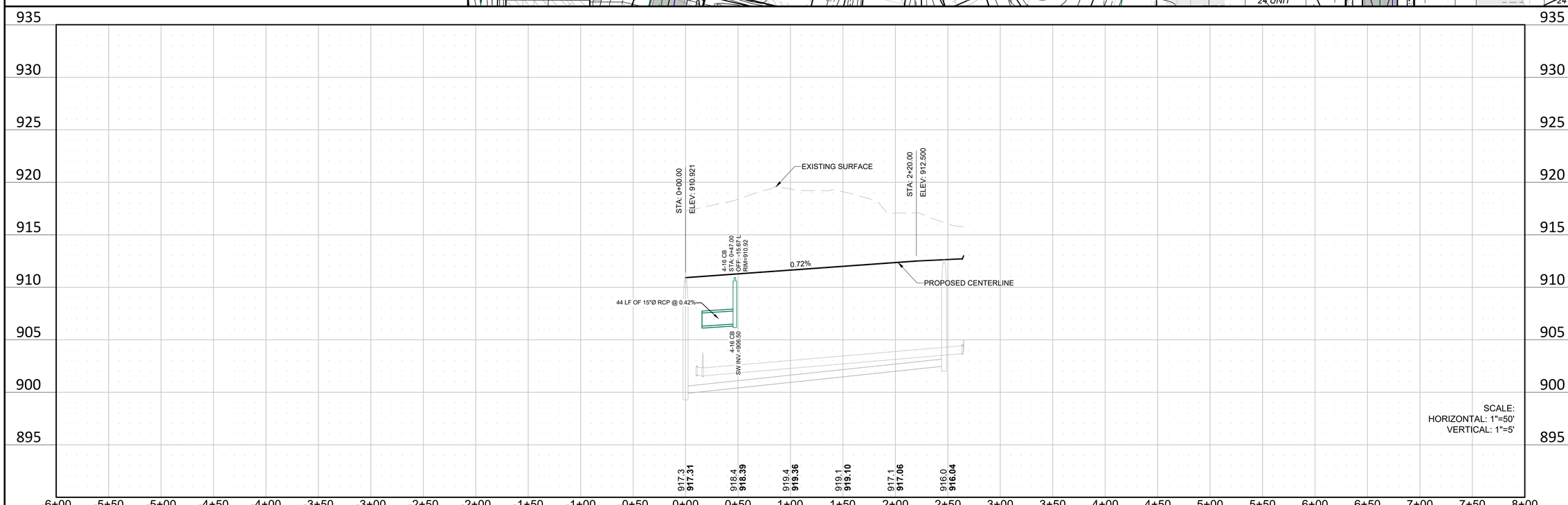


| REV NO. | DATE | DESCRIPTION |
|---|---|---|
| 1 | 04/01/2025 | REVISION PER CITY REVIEW |
| 2 | 04/24/2025 | REVISION PER CITY REVIEW |
| 3 | 05/29/2025 | REVISION PER CITY & COUNTY REVIEW |

DATE: 05/29/2025
DESIGN BY: MJM
DRAWN BY: MJM
CHECKED BY: CJD
DWG FILE: GRADING
FILE NO.: 22-0030.00

I hereby certify that this plan, specification, or report was prepared by me or under my direct supervision and that I am a duly Licensed Professional Engineer under the laws of the State of Minnesota.

Signed: Christopher J. Dahn
Date: Lic. No. 58628

NOT FOR CONSTRUCTION


BOGART, PEDERSON & ASSOCIATES, INC.
LAND SURVEYING
CIVIL ENGINEERING
ENVIRONMENTAL SERVICES
13076 FIRST STREET, BECKER, MN 55308-9322
TEL: 763-262-9822 FAX: 763-262-9844


CEDAR RIDGE COMMUNITY LLC
CEDAR RIDGE COMMUNITY
City of North Branch, Chisago County, MN

FALLCREST CT (STREET & STORM)

SHEET NO.
C5.6

N:\Projects Current\22-0030.02 Belden North Branch Plat\Civil\CAD Files\NB Utility.dwg 5:29 PM 5/29/2025

## LEGEND:

- PROPOSED RIP RAP
- 984 — PROPOSED CONTOUR
- PROPOSED STORM SEWER
- PROPOSED WATER LINE
- PROPOSED SANITARY SEWER
- W — PROPOSED WATER SERVICE
- S — PROPOSED SANITARY SERVICE
- PROPOSED CATCH BASIN
- PROPOSED FLARED END SECITON
- D — PROPOSED STORM MANHOLE
- PROPOSED GATE VALVE & BOX
- PROPOSED HYDRANT
- S — PROPOSED SANITARY MANHOLE

0' 50' 100'
SCALE: 1"=50'

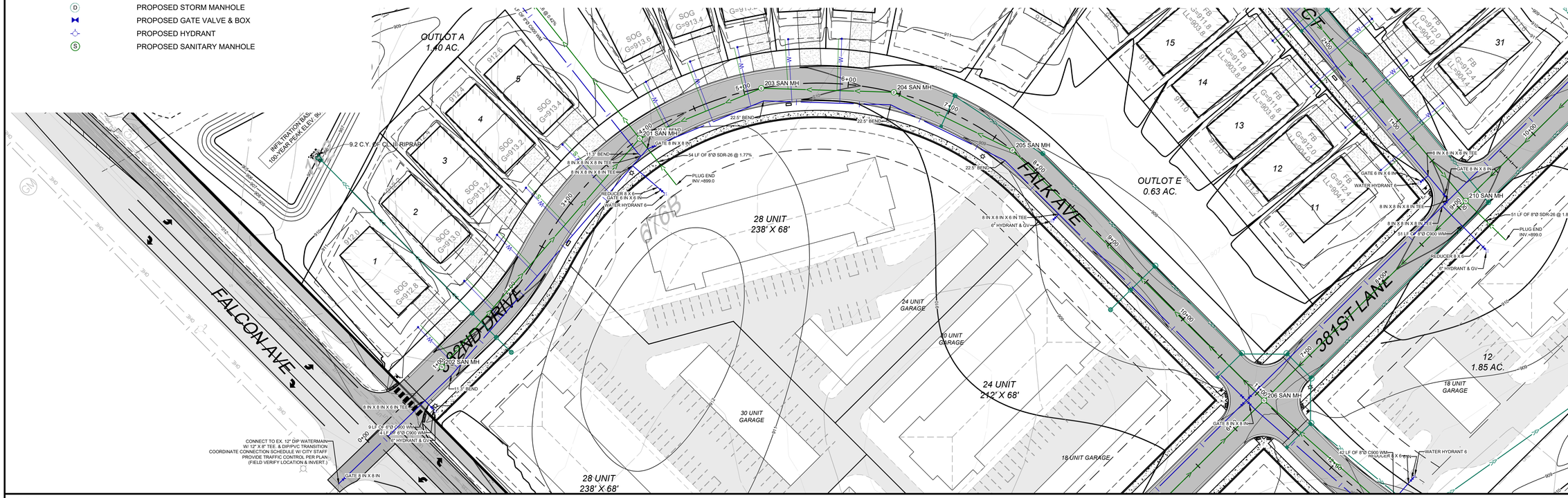


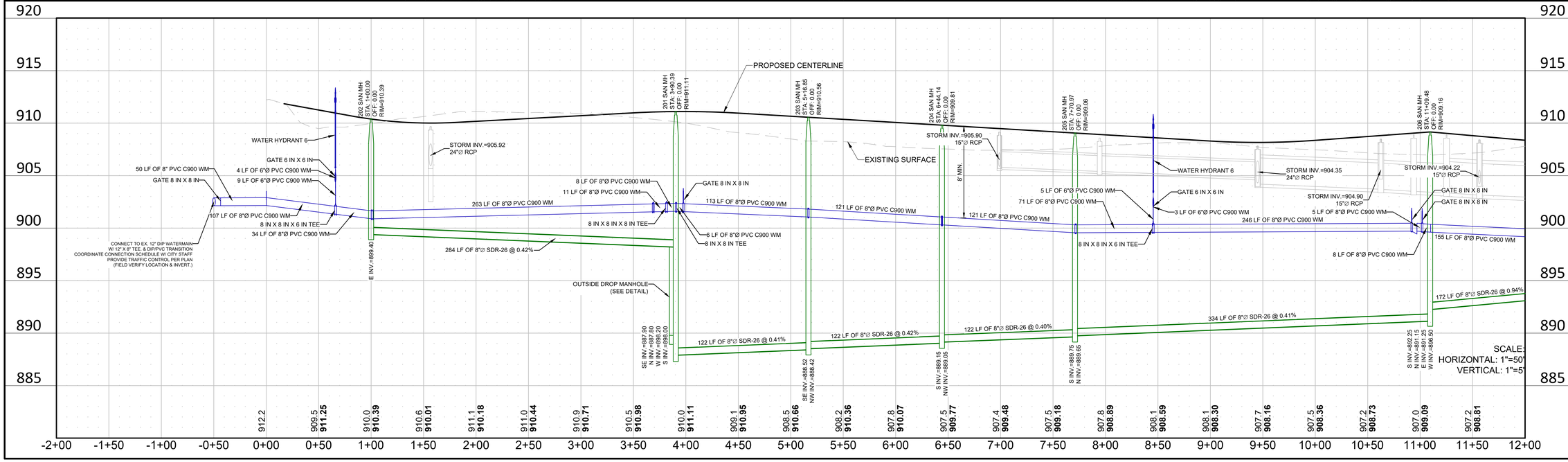


| REV NO. | DATE | DESCRIPTION |
|---|---|---|
| 1 | 04/01/2025 | REVISION PER CITY REVIEW |
| 2 | 04/24/2025 | REVISION PER CITY REVIEW |
| 3 | 05/29/2025 | REVISION PER CITY & COUNTY REVIEW |

DATE: 05/29/2025
DESIGN BY: MJM
DRAWN BY: MJM
CHECKED BY: CJD
DWG FILE: GRADING
FILE NO.: 22-0030.00

I hereby certify that this plan, specification, or report was prepared by me or under my direct supervision and that I am a duly Licensed Professional Engineer under the laws of the State of Minnesota.

NOT FOR CONSTRUCTION

Signed: Christopher J. Dahn
Date: Lic. No. 58628


BOGART, PEDERSON & ASSOCIATES, INC.
LAND SURVEYING
CIVIL ENGINEERING
ENVIRONMENTAL SERVICES
13076 FIRST STREET BECKER, MN 55308-9322
TEL: 763-262-9822 FAX: 763-262-9844


CEDAR RIDGE COMMUNITY LLC
CEDAR RIDGE COMMUNITY
City of North Branch, Chisago County, MN

382ND & FALK AVE (SANI. & WATER)

SHEET NO.
C6.1

## LEGEND:

- PROPOSED RIP RAP
- 984 — PROPOSED CONTOUR
- PROPOSED STORM SEWER
- PROPOSED WATER LINE
- PROPOSED SANITARY SEWER
- W — PROPOSED WATER SERVICE
- S — PROPOSED SANITARY SERVICE
- PROPOSED CATCH BASIN
- PROPOSED FLARED END SECITON
- D — PROPOSED STORM MANHOLE
- PROPOSED GATE VALVE & BOX
- PROPOSED HYDRANT
- S — PROPOSED SANITARY MANHOLE

N

0' 50' 100'

SCALE: 1"=50'

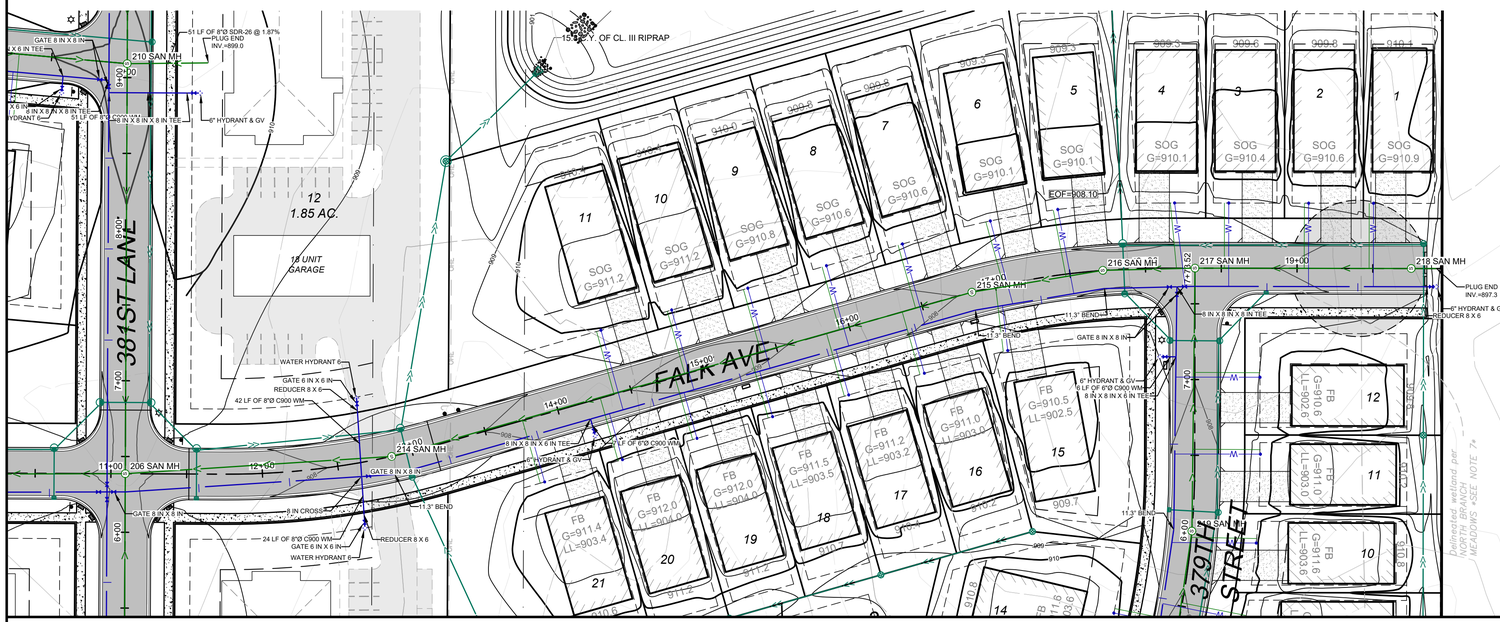


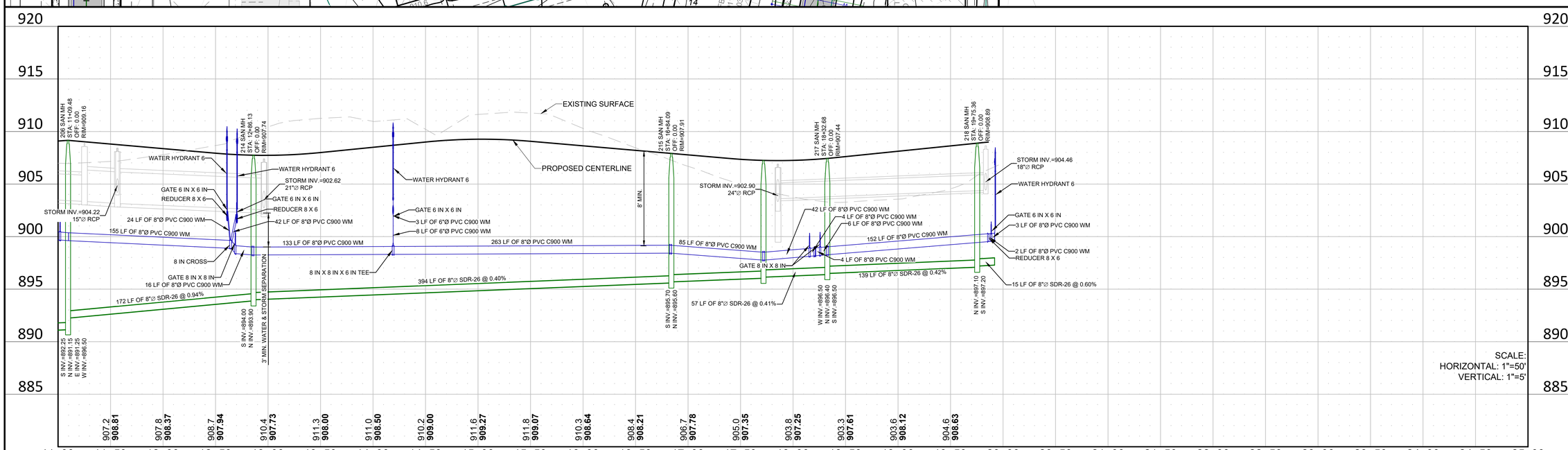


| REV NO. | DATE | DESCRIPTION |
|---|---|---|
| 1 | 04/01/2025 | REVISION PER CITY REVIEW |
| 2 | 04/24/2025 | REVISION PER CITY REVIEW |
| 3 | 05/29/2025 | REVISION PER CITY & COUNTY REVIEW |

DATE: 05/29/2025
DESIGN BY: MJM
DRAWN BY: MJM
CHECKED BY: CJD
DWG FILE: GRADING
FILE NO.: 22-0030.00

I hereby certify that this plan, specification, or report was prepared by me or under my direct supervision and that I am a duly Licensed Professional Engineer under the laws of the State of Minnesota.

NOT FOR CONSTRUCTION

Signed: Christopher J. Dahn
Date: Lic. No. 58628


BOGART, PEDERSON & ASSOCIATES, INC.
LAND SURVEYING
CIVIL ENGINEERING
ENVIRONMENTAL SERVICES
13079 FIRST STREET, BECKER, MN 55308-9322
TEL: 763-262-9822 FAX: 763-262-9844


CEDAR RIDGE COMMUNITY LLC
CEDAR RIDGE COMMUNITY
City of North Branch, Chisago County, MN

FALK AVE (SANI. & WATER)

SHEET NO.
C6.2

N:\Projects Current\22-0030.00 Becker North Branch Plat\Civil\CAD Files\Utility.dwg
5:29 PM
5/29/2025

## LEGEND:

- PROPOSED RIP RAP
- 984 — PROPOSED CONTOUR
- PROPOSED STORM SEWER
- PROPOSED WATER LINE
- PROPOSED SANITARY SEWER
- W — PROPOSED WATER SERVICE
- S — PROPOSED SANITARY SERVICE
- PROPOSED CATCH BASIN
- PROPOSED FLARED END SECITON
- D — PROPOSED STORM MANHOLE
- PROPOSED GATE VALVE & BOX
- PROPOSED HYDRANT
- S — PROPOSED SANITARY MANHOLE

N

0' 50' 100'

SCALE: 1"=50'

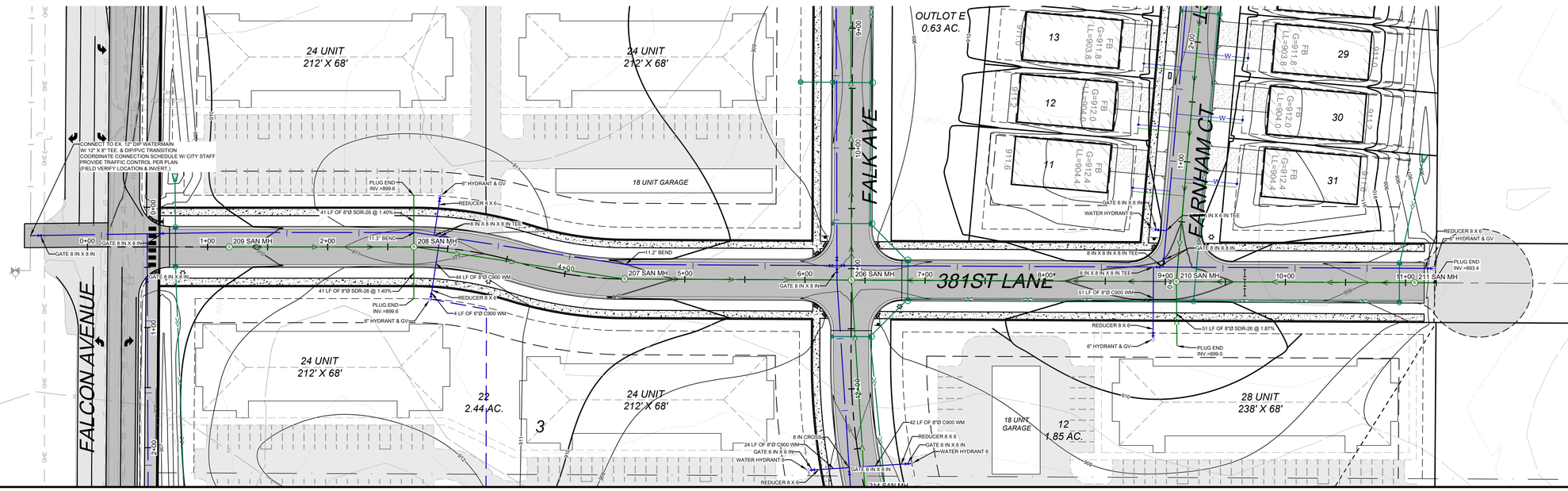


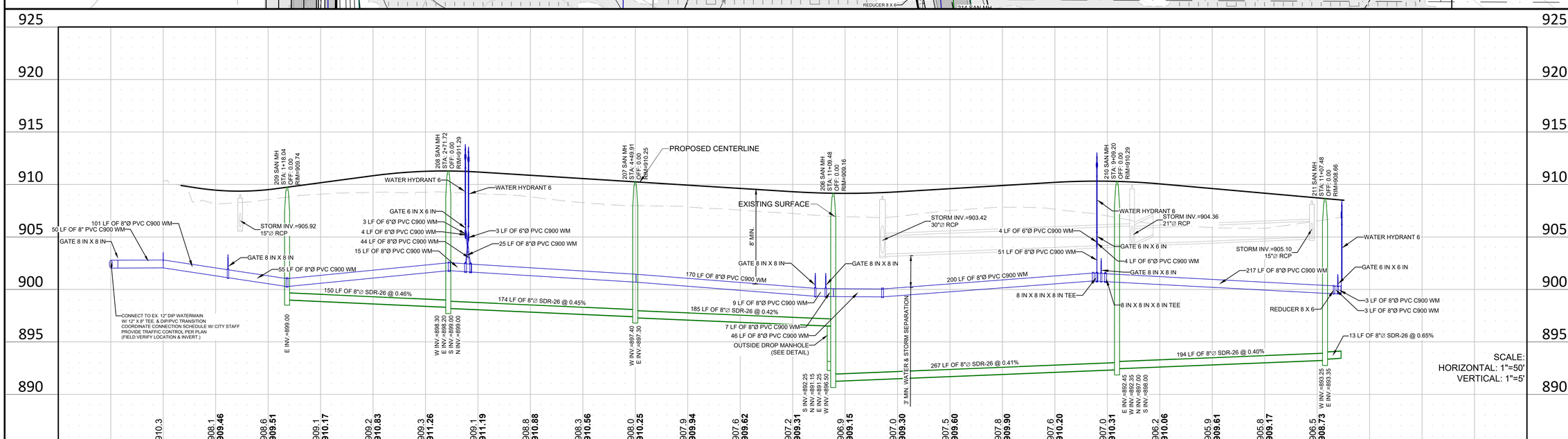


| REV NO. | DATE | DESCRIPTION |
|---|---|---|
| 1 | 04/01/2025 | REVISION PER CITY REVIEW |
| 2 | 04/24/2025 | REVISION PER CITY REVIEW |
| 3 | 05/29/2025 | REVISION PER CITY & COUNTY REVIEW |

DATE: 05/29/2025
DESIGN BY: MJM
DRAWN BY: MJM
CHECKED BY: CJD
DWG FILE: GRADING
FILE NO.: 22-0030.00

I hereby certify that this plan, specification, or report was prepared by me or under my direct supervision and that I am a duly Licensed Professional Engineer under the laws of the State of Minnesota.

Signed: Christopher J. Dahn

Date: Lic. No. 58628

NOT FOR CONSTRUCTION


BOGART, PEDERSON & ASSOCIATES, INC.
LAND SURVEYING
CIVIL ENGINEERING
ENVIRONMENTAL SERVICES
13079 FIRST STREET, BECKER, MN 55308-9322
TEL: 763-262-3822 FAX: 763-262-3844


CEDAR RIDGE COMMUNITY LLC
CEDAR RIDGE COMMUNITY
City of North Branch, Chisago County, MN

381ST LANE (SANI. & WATER)

SHEET NO.

C6.3

N:\Projects-Current\22-0030.00 Belcher North Branch Plat\Civil\CAD Files\NB Utility.dwg
5:30 PM 5/29/2025

## LEGEND:

- PROPOSED RIP RAP
- 984 PROPOSED CONTOUR
- PROPOSED STORM SEWER
- PROPOSED WATER LINE
- PROPOSED SANITARY SEWER
- W PROPOSED WATER SERVICE
- S PROPOSED SANITARY SERVICE
- PROPOSED CATCH BASIN
- PROPOSED FLARED END SECITON
- D PROPOSED STORM MANHOLE
- PROPOSED GATE VALVE & BOX
- PROPOSED HYDRANT
- S PROPOSED SANITARY MANHOLE

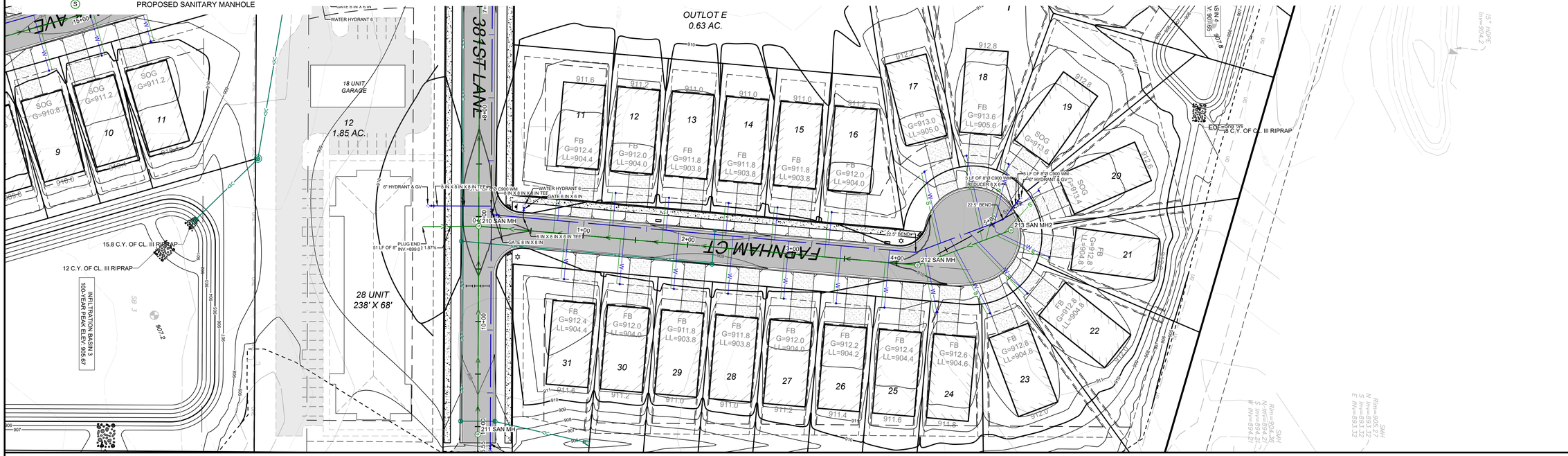


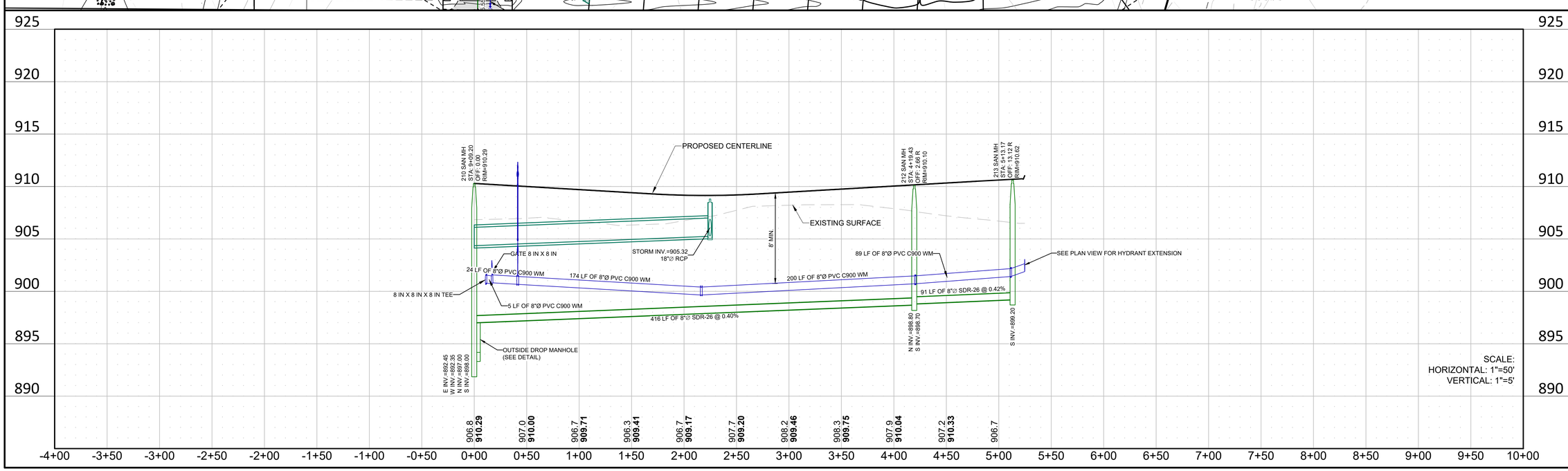


| REV NO. | DATE | DESCRIPTION |
|---|---|---|
| 1 | 04/01/2025 | REVISION PER CITY REVIEW |
| 2 | 04/24/2025 | REVISION PER CITY REVIEW |
| 3 | 05/29/2025 | REVISION PER CITY & COUNTY REVIEW |

DATE: 05/29/2025
DESIGN BY: MJM
DRAWN BY: MJM
CHECKED BY: CJD
DWG FILE: GRADING
FILE NO.: 22-0030.00

I hereby certify that this plan, specification, or report was prepared by me or under my direct supervision and that I am a duly Licensed Professional Engineer under the laws of the State of Minnesota.

NOT FOR CONSTRUCTION

Signed: Christopher J. Dahn
Date: Lic. No. 58628


BOGART, PEDERSON & ASSOCIATES, INC.
LAND SURVEYING
CIVIL ENGINEERING
ENVIRONMENTAL SERVICES
13076 FIRST STREET, BECKER, MN 55308-9322
TEL. 763-262-9822 FAX. 763-262-9844


CEDAR RIDGE COMMUNITY LLC
CEDAR RIDGE COMMUNITY
City of North Branch, Chisago County, MN

FARNHAM CT (SANI. & WATER)

SHEET NO.
C6.4

N:\Projects Current\22-0030.02 Bellaire North Branch Plat\Civil\CAD Files\NB Utility.dwg
5:30 PM
5/29/2025

## LEGEND:

- PROPOSED RIP RAP
- 984 PROPOSED CONTOUR
- PROPOSED STORM SEWER
- PROPOSED WATER LINE
- PROPOSED SANITARY SEWER
- W PROPOSED WATER SERVICE
- S PROPOSED SANITARY SERVICE
- PROPOSED CATCH BASIN
- PROPOSED FLARED END SECITON
- D PROPOSED STORM MANHOLE
- PROPOSED GATE VALVE & BOX
- PROPOSED HYDRANT
- S PROPOSED SANITARY MANHOLE

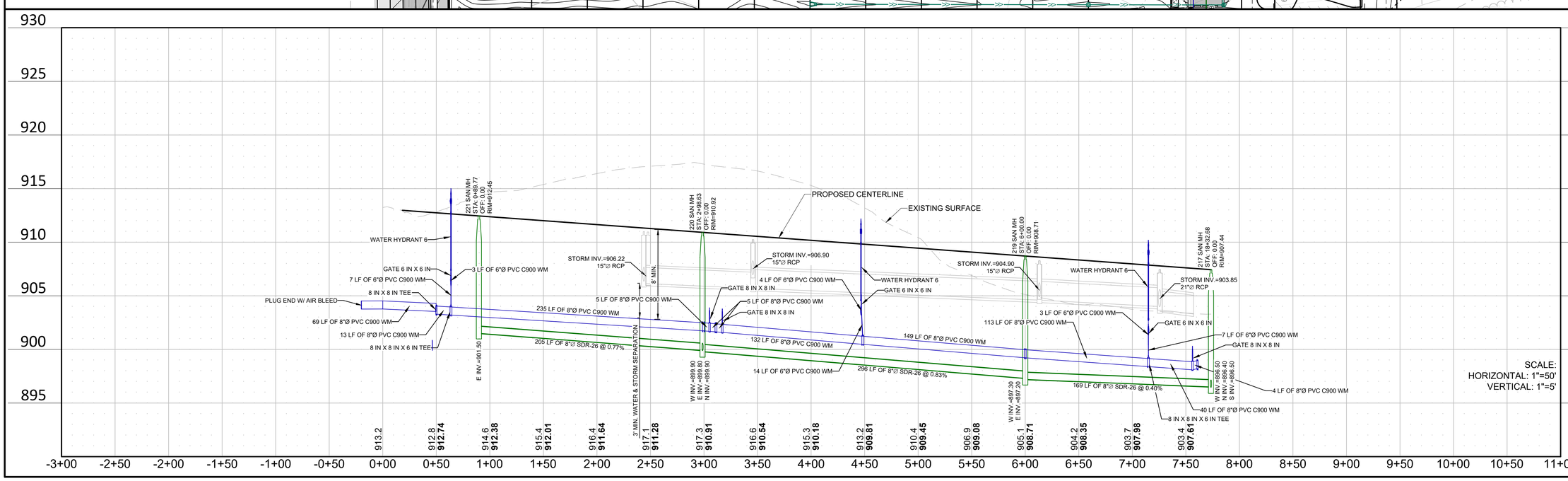


| REV NO. | DATE | DESCRIPTION |
|---|---|---|
| 1 | 04/01/2025 | REVISION PER CITY REVIEW |
| 2 | 04/24/2025 | REVISION PER CITY REVIEW |
| 3 | 05/29/2025 | REVISION PER CITY & COUNTY REVIEW |

DATE: 05/29/2025
DESIGN BY: MJM
DRAWN BY: MJM
CHECKED BY: CJD
DWG FILE: GRADING
FILE NO.: 22-0030.00

I hereby certify that this plan, specification, or report was prepared by me or under my direct supervision and that I am a duly Licensed Professional Engineer under the laws of the State of Minnesota.

Signed: Christopher J. Dahn
Date: Lic. No. 58628

NOT FOR CONSTRUCTION


BOGART, PEDERSON & ASSOCIATES, INC.
LAND SURVEYING
CIVIL ENGINEERING
ENVIRONMENTAL SERVICES
13079 FIRST STREET, BECKER, MN 55308-9322
TEL: 763-262-9822 FAX: 763-262-9844


CEDAR RIDGE COMMUNITY LLC
CEDAR RIDGE COMMUNITY
City of North Branch, Chisago County, MN

379TH STREET (SANI. & WATER)

SHEET NO.
C6.5

N:\Projects Current\22-0030.02 Belzer North Branch Pine\Civil\CAD Files\NB Utility.dwg
5:30 PM
5/29/2025

## LEGEND:

- PROPOSED RIP RAP
- 984 PROPOSED CONTOUR
- PROPOSED STORM SEWER
- PROPOSED WATER LINE
- PROPOSED SANITARY SEWER
- W PROPOSED WATER SERVICE
- S PROPOSED SANITARY SERVICE
- PROPOSED CATCH BASIN
- PROPOSED FLARED END SECITON
- D PROPOSED STORM MANHOLE
- PROPOSED GATE VALVE & BOX
- PROPOSED HYDRANT
- S PROPOSED SANITARY MANHOLE

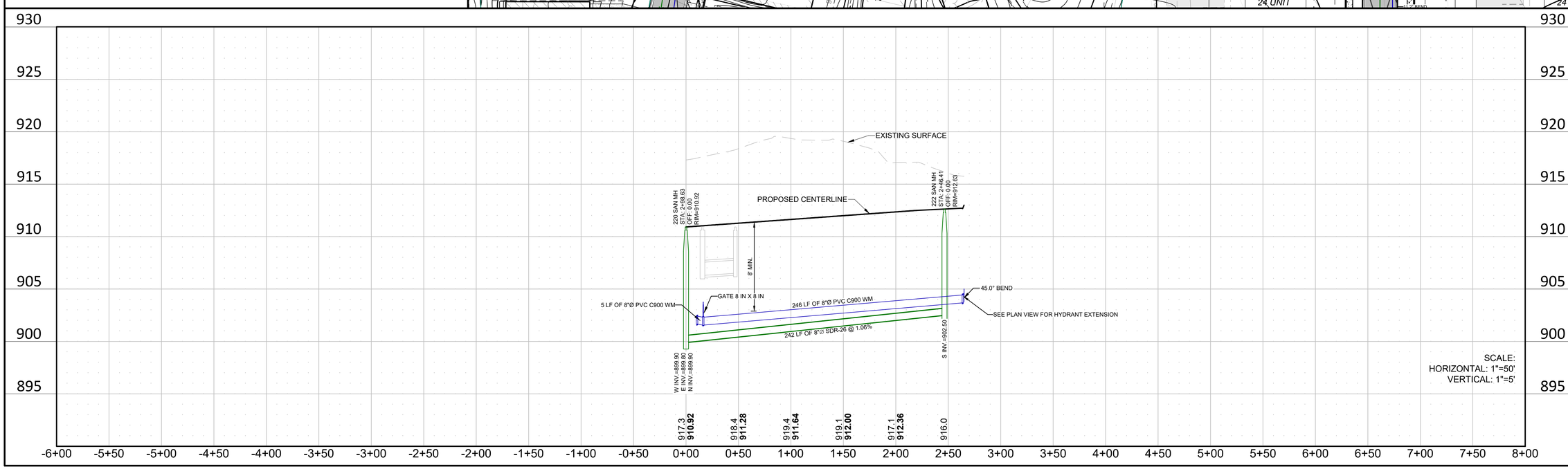


| REV NO. | DATE | DESCRIPTION |
|---|---|---|
| 1 | 04/01/2025 | REVISION PER CITY REVIEW |
| 2 | 04/24/2025 | REVISION PER CITY REVIEW |
| 3 | 05/29/2025 | REVISION PER CITY & COUNTY REVIEW |

DATE: 05/29/2025
DESIGN BY: MJM
DRAWN BY: MJM
CHECKED BY: CJD
DWG FILE: GRADING
FILE NO.: 22-0030.00

I hereby certify that this plan, specification, or report was prepared by me or under my direct supervision and that I am a duly Licensed Professional Engineer under the laws of the State of Minnesota.

Signed: Christopher J. Dahn
Date: Lic. No. 58628

NOT FOR CONSTRUCTION


BOGART, PEDERSON & ASSOCIATES, INC.
LAND SURVEYING
CIVIL ENGINEERING
ENVIRONMENTAL SERVICES
13078 FIRST STREET, BECKER, MN 55308-9322
TEL: 763-262-9622 FAX: 763-262-9644


CEDAR RIDGE COMMUNITY LLC
CEDAR RIDGE COMMUNITY
City of North Branch, Chisago County, MN

FALLCREST CT (SANI. & WATER)

SHEET NO.
C6.6

N:\Projects Current\22-0030.02 Belzer North Branch Pine\Civil\CAD Files\NB Utility.dwg
5:30 PM
5/29/2025

## LEGEND:

- PROPOSED RIP RAP
- 984 PROPOSED CONTOUR
- PROPOSED STORM SEWER
- PROPOSED WATER LINE
- PROPOSED SANITARY SEWER
- W PROPOSED WATER SERVICE
- S PROPOSED SANITARY SERVICE
- PROPOSED CATCH BASIN
- PROPOSED FLARED END SECITON
- D PROPOSED STORM MANHOLE
- PROPOSED GATE VALVE & BOX
- PROPOSED HYDRANT
- S PROPOSED SANITARY MANHOLE

N

0' 50' 100'

SCALE: 1"=50'

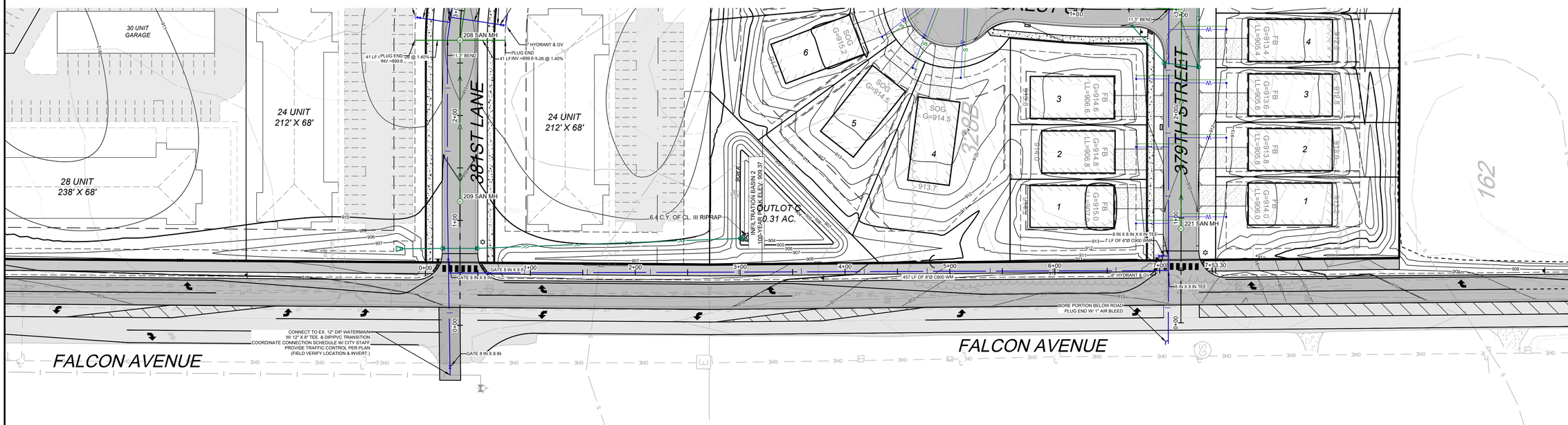


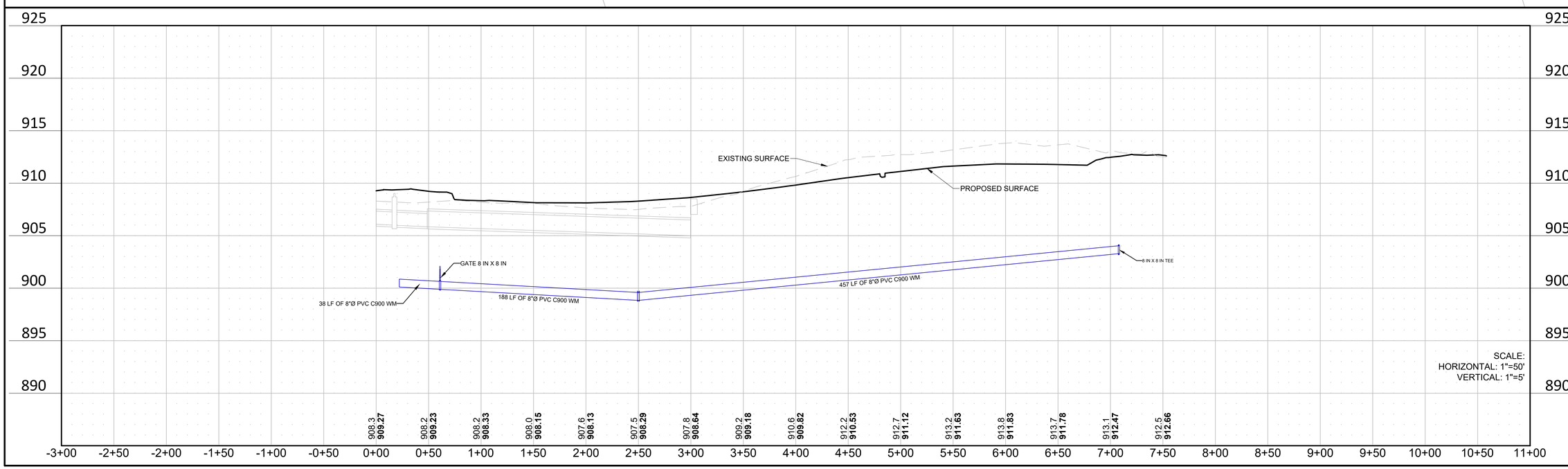


| REV NO. | DATE | DESCRIPTION |
|---|---|---|
| 1 | 04/01/2025 | REVISION PER CITY REVIEW |
| 2 | 04/24/2025 | REVISION PER CITY REVIEW |
| 3 | 05/29/2025 | REVISION PER CITY & COUNTY REVIEW |

DATE: 05/29/2025
DESIGN BY: MJM
DRAWN BY: MJM
CHECKED BY: CJD
DWG FILE: GRADING
FILE NO.: 22-0030.00

I hereby certify that this plan, specification, or report was prepared by me or under my direct supervision and that I am a duly Licensed Professional Engineer under the laws of the State of Minnesota.

Signed: Christopher J. Dahn
Date: Lic. No. 58628

NOT FOR CONSTRUCTION


BOGART, PEDERSON & ASSOCIATES, INC.
LAND SURVEYING
CIVIL ENGINEERING
ENVIRONMENTAL SERVICES
13179 FIRST STREET, BECKER, MN 55308-9322
TEL: 763-262-9622 FAX: 763-262-9644


CEDAR RIDGE COMMUNITY LLC
CEDAR RIDGE COMMUNITY
City of North Branch, Chisago County, MN

FALCON AVENUE N (WATER)

SHEET NO.
C6.7

N:\Projects Current\22-0030.02 Belzer North Branch Plat\Civil\CAD Files\NB Utility.dwg
5:39 PM
5/29/2025

## CEDAR RIDGE COMMUNITY SERVICE INFORMATION

| Lot Design | | | Elevation Information | | Sanitary Service | | | | | | | |
|---|---|---|---|---|---|---|---|---|---|---|---|---|
| Block | Lot | House Type | Basement | Street | Wye Sta. | Dist. From Down MH | Main Inv. | Length | Riser Height | End Inv. | Basement to End Inv. | Diam. & Mat. |
| 1 | 1 | SOG | 912.8 | 382ND DRIVE | 1+13.2 | 272 | 899.34 | 42.0 | **2** | 902.85 | 9.95 | 4" PVC SDR-26 |
| 1 | 2 | SOG | 913.0 | 382ND DRIVE | 1+76.0 | 209 | 899.08 | 37.5 | **3** | 903.50 | 9.50 | 4" PVC SDR-26 |
| 1 | 3 | SOG | 913.2 | 382nd DRIVE | 2+29.7 | 156 | 898.86 | 42.6 | **3** | 903.38 | 9.82 | 4" PVC SDR-26 |
| 1 | 4 | SOG | 913.2 | 382nd DRIVE | 2+80.7 | 105 | 898.65 | 51.2 | **3** | 903.34 | 9.86 | 4" PVC SDR-26 |
| 1 | 5 | SOG | 913.4 | 382nd DRIVE | 3+36.3 | 51 | 898.42 | 51.8 | **3** | 903.13 | 10.27 | 4" PVC SDR-26 |
| 1 | 6 | SOG | 913.6 | 382nd DRIVE | 4+17.3 | 29 | 888.01 | 47.5 | **14** | 903.63 | 9.97 | 4" PVC SDR-26 |
| 1 | 7 | SOG | 913.4 | 382nd DRIVE | 4+59.0 | 71 | 888.19 | 49.6 | **14** | 903.85 | 9.55 | 4" PVC SDR-26 |
| 1 | 8 | SOG | 913.2 | 382nd DRIVE | 5+00.2 | 111 | 888.35 | 46.1 | **14** | 903.94 | 9.26 | 4" PVC SDR-26 |
| 1 | 9 | SOG | 912.8 | 382nd DRIVE | 5+42.0 | 22 | 888.63 | 47.4 | **13** | 903.25 | 9.55 | 4" PVC SDR-26 |
| 1 | 10 | SOG | 912.6 | 382nd DRIVE | 5+89.6 | 70 | 888.82 | 49.5 | **13** | 903.48 | 9.12 | 4" PVC SDR-26 |
| 1 | 11 | FB | 904.4 | FARNHAM CT | 0+71.5 | 69 | 897.29 | 43.0 | 0 | 898.82 | 5.58 | 4" PVC SDR-26 |
| 1 | 12 | FB | 904.0 | FARNHAM CT | 1+24.2 | 122 | 897.50 | 43.0 | 0 | 899.03 | 4.97 | 4" PVC SDR-26 |
| 1 | 13 | FB | 903.8 | FARNHAM CT | 1+75.31 | 172 | 897.71 | 43.0 | 0 | 899.24 | 4.56 | 4" PVC SDR-26 |
| 1 | 14 | FB | 903.8 | FARNHAM CT | 2+32.3 | 230 | 897.94 | 43.0 | 0 | 899.47 | 4.33 | 4" PVC SDR-26 |
| 1 | 15 | FB | 903.8 | FARNHAM CT | 2+79.1 | 277 | 898.13 | 43.0 | 0 | 899.66 | 4.14 | 4" PVC SDR-26 |
| 1 | 16 | FB | 904.0 | FARNHAM CT | 3+30.9 | 328 | 898.34 | 43.0 | 0 | 899.87 | 4.13 | 4" PVC SDR-26 |
| 1 | 17 | FB | 905.0 | FARNHAM CT | 4+42.2 | 21 | 898.90 | 82.1 | 0 | 901.21 | 3.79 | 4" PVC SDR-26 |
| 1 | 18 | FB | 905.6 | FARNHAM CT | 4+84.3 | 63 | 899.08 | 82.7 | 0 | 901.40 | 4.20 | 4" PVC SDR-26 |
| 1 | 19 | SOG | 913.6 | FARNHAM CT | 4+88.07 | 67 | 899.10 | 74.8 | **2** | 903.27 | 10.33 | 4" PVC SDR-26 |
| 1 | 20 | SOG | 913.4 | FARNHAM CT | 5+05.9 | 85 | 899.17 | 51.3 | **3** | 903.87 | 9.53 | 4" PVC SDR-26 |
| 1 | 21 | FB | 904.8 | FARNHAM CT | 4+98.5 | 78 | 899.14 | 54.4 | 0 | 900.90 | 3.90 | 4" PVC SDR-26 |
| 1 | 22 | FB | 904.8 | FARNHAM CT | 4+77.2 | 56 | 899.05 | 68.5 | 0 | 901.09 | 3.71 | 4" PVC SDR-26 |
| 1 | 23 | FB | 904.8 | FARNHAM CT | 4+55.1 | 34 | 898.96 | 68.0 | 0 | 900.99 | 3.81 | 4" PVC SDR-26 |
| 1 | 24 | FB | 904.6 | FARNHAM CT | 4+26.0 | 4 | 898.83 | 48.6 | 0 | 900.47 | 4.13 | 4" PVC SDR-26 |
| 1 | 25 | FB | 904.4 | FARNHAM CT | 3+89.1 | 387 | 898.58 | 43.0 | 0 | 900.11 | 4.29 | 4" PVC SDR-26 |
| 1 | 26 | FB | 904.2 | FARNHAM CT | 3+42.8 | 340 | 898.39 | 43.0 | 0 | 899.92 | 4.28 | 4" PVC SDR-26 |
| 1 | 27 | FB | 904.0 | FARNHAM CT | 2+92.7 | 290 | 898.19 | 43.0 | 0 | 899.72 | 4.28 | 4" PVC SDR-26 |
| 1 | 28 | FB | 903.8 | FARNHAM CT | 2+39.4 | 237 | 897.97 | 43.0 | 0 | 899.50 | 4.30 | 4" PVC SDR-27 |
| 1 | 29 | FB | 903.8 | FARNHAM CT | 1+87.5 | 185 | 897.76 | 43.0 | 0 | 899.29 | 4.51 | 4" PVC SDR-26 |
| 1 | 30 | FB | 904.0 | FARNHAM CT | 1+35.8 | 133 | 897.55 | 43.0 | 0 | 899.08 | 4.92 | 4" PVC SDR-26 |
| 1 | 31 | FB | 904.4 | FARNHAM CT | 0+82.5 | 80 | 897.33 | 43.0 | 0 | 898.86 | 5.54 | 4" PVC SDR-26 |
| 3 | 1 | FB | 907.0 | 379TH STREET | 0+97.7 | 199 | 901.44 | 43.0 | 0 | 902.97 | 4.03 | 4" PVC SDR-26 |
| 3 | 2 | FB | 906.8 | 379TH STREET | 1+70.5 | 125 | 900.89 | 43.0 | 0 | 902.42 | 4.38 | 4" PVC SDR-26 |
| 3 | 3 | FB | 906.6 | 379TH STREET | 2+35.4 | 61 | 900.38 | 43.0 | 0 | 901.91 | 4.69 | 4" PVC SDR-26 |
| 3 | 4 | SOG | 914.5 | FALLCREST CT | 2+03.8 | 201 | 902.05 | 75.9 | 0 | 904.24 | 10.26 | 4" PVC SDR-26 |
| 3 | 5 | SOG | 914.5 | FALLCREST CT | 2+27.7 | 225 | 902.30 | 73.3 | 0 | 904.44 | 10.06 | 4" PVC SDR-26 |
| 3 | 6 | SOG | 915.2 | FALLCREST CT | 2+32.8 | 230 | 902.36 | 65.7 | 0 | 904.34 | 10.86 | 4" PVC SDR-26 |
| 3 | 7 | FB | 907.2 | FALLCREST CT | 2+39.7 | 237 | 902.46 | 56.8 | 0 | 904.27 | 2.93 | 4" PVC SDR-26 |
| 3 | 8 | FB | 907.2 | FALLCREST CT | 2+41.6 | 239 | 902.45 | 62.5 | 0 | 904.37 | 2.83 | 4" PVC SDR-27 |
| 3 | 9 | FB | 907.5 | FALLCREST CT | 2+12.9 | 210 | 902.14 | 76.6 | 0 | 904.34 | 3.16 | 4" PVC SDR-28 |
| 3 | 10 | FB | 906.9 | FALLCREST CT | 1+85.4 | 182 | 901.85 | 68.6 | 0 | 903.89 | 3.01 | 4" PVC SDR-29 |
| 3 | 11 | FB | 905.3 | 379TH STREET | 3+84.8 | 84 | 899.09 | 52.5 | 0 | 900.81 | 4.49 | 4" PVC SDR-26 |
| 3 | 12 | FB | 905.0 | 379TH STREET | 4+34.7 | 123 | 898.66 | 51.8 | 0 | 900.37 | 4.63 | 4" PVC SDR-26 |
| 3 | 13 | FB | 904.2 | 379TH STREET | 4+85.4 | 183 | 898.25 | 47.7 | 0 | 899.87 | 4.33 | 4" PVC SDR-26 |
| 3 | 14 | FB | 903.6 | 379TH STREET | 5+39.8 | 237 | 897.80 | 43.0 | 0 | 899.33 | 4.27 | 4" PVC SDR-26 |
| 3 | 15 | FB | 902.5 | FALK AVE | 17+00 | 13 | 895.76 | 42.0 | 0 | 897.27 | 5.23 | 4" PVC SDR-26 |
| 3 | 16 | FB | 903.0 | FALK AVE | 16+36.3 | 348 | 895.41 | 43.0 | 0 | 896.94 | 6.06 | 4" PVC SDR-27 |
| 3 | 17 | FB | 903.2 | FALK AVE | 15+84.3 | 296 | 895.20 | 43.0 | 0 | 896.73 | 6.47 | 4" PVC SDR-28 |
| 3 | 18 | FB | 903.5 | FALK AVE | 15+32.1 | 244 | 894.99 | 43.3 | 0 | 896.53 | 6.97 | 4" PVC SDR-29 |
| 3 | 19 | FB | 904.0 | FALK AVE | 14+80.2 | 191 | 894.78 | 43.4 | 0 | 896.32 | 7.68 | 4" PVC SDR-30 |
| 3 | 20 | FB | 904.0 | FALK AVE | 14+29.1 | 141 | 894.58 | 43.5 | 0 | 896.12 | 7.88 | 4" PVC SDR-31 |
| 3 | 21 | FB | 903.4 | FALK AVE | 13+75.6 | 87 | 894.36 | 43.7 | 0 | 895.90 | 7.50 | 4" PVC SDR-32 |
| 4 | 1 | SOG | 910.9 | FALK AVE | 19+47.5 | 112 | 896.98 | 43.0 | **3** | 901.51 | 9.39 | 4" PVC SDR-33 |
| 4 | 2 | SOG | 910.6 | FALK AVE | 19+04.7 | 68 | 896.80 | 43.0 | **3** | 901.33 | 9.27 | 4" PVC SDR-34 |
| 4 | 3 | SOG | 910.4 | FALK AVE | 18+52.0 | 16 | 896.58 | 43.0 | **3** | 901.11 | 9.29 | 4" PVC SDR-35 |
| 4 | 4 | SOG | 910.1 | FALK AVE | 18+20.5 | 46 | 896.35 | 43.5 | **3** | 900.89 | 9.21 | 4" PVC SDR-36 |
| 4 | 5 | SOG | 910.1 | FALK AVE | 17+47.3 | 60 | 895.95 | 44.5 | **3** | 900.51 | 9.59 | 4" PVC SDR-37 |
| 4 | 6 | SOG | 910.1 | FALK AVE | 17+05.5 | 416 | 895.79 | 44.5 | **3** | 900.35 | 9.75 | 4" PVC SDR-38 |
| 4 | 7 | SOG | 910.6 | FALK AVE | 16+45.4 | 356 | 895.44 | 43.1 | **4** | 900.97 | 9.63 | 4" PVC SDR-39 |
| 4 | 8 | SOG | 910.6 | FALK AVE | 15+93.2 | 303 | 895.24 | 43.0 | **4** | 900.77 | 9.83 | 4" PVC SDR-40 |
| 4 | 9 | SOG | 910.8 | FALK AVE | 15+39.3 | 250 | 895.02 | 42.7 | **5** | 901.54 | 9.26 | 4" PVC SDR-41 |
| 4 | 10 | SOG | 911.2 | FALK AVE | 14+87.0 | 198 | 894.81 | 42.6 | **5** | 901.33 | 9.87 | 4" PVC SDR-42 |
| 4 | 11 | SOG | 911.2 | FALK AVE | 14+38.5 | 150 | 894.61 | 42.5 | **6** | 902.13 | 9.07 | 4" PVC SDR-43 |
| 5 | 1 | FB | 906.0 | 379TH STREET | 1+04.0 | 192 | 901.39 | 43.0 | 0 | 902.92 | 3.08 | 4" PVC SDR-44 |
| 5 | 2 | FB | 905.8 | 379TH STREET | 1+79.5 | 117 | 900.81 | 43.0 | 0 | 902.34 | 3.46 | 4" PVC SDR-45 |
| 5 | 3 | FB | 905.6 | 379th STREET | 2+31.7 | 64 | 900.42 | 43.0 | 0 | 901.95 | 3.65 | 4" PVC SDR-46 |
| 5 | 4 | FB | 905.4 | 379th STREET | 2+82.6 | 14 | 900.02 | 43.0 | 0 | 901.55 | 3.85 | 4" PVC SDR-47 |
| 5 | 5 | FB | 905.0 | 379th STREET | 3+33.1 | 263 | 899.51 | 38.0 | 0 | 900.94 | 4.06 | 4" PVC SDR-48 |
| 5 | 6 | FB | 904.6 | 379th STREET | 3+92.8 | 203 | 899.03 | 34.2 | 0 | 900.38 | 4.22 | 4" PVC SDR-49 |
| 5 | 7 | FB | 904.4 | 379th STREET | 4+44.8 | 153 | 898.59 | 34.2 | 0 | 899.94 | 4.46 | 4" PVC SDR-50 |
| 5 | 8 | FB | 904.2 | 379th STREET | 4+97.1 | 100 | 898.15 | 38.8 | 0 | 899.60 | 4.60 | 4" PVC SDR-51 |
| 5 | 9 | FB | 904.0 | 379th STREET | 5+52.2 | 45 | 897.69 | 43.0 | 0 | 899.22 | 4.78 | 4" PVC SDR-52 |
| 5 | 10 | FB | 903.6 | 379th STREET | 5+95.5 | 2 | 897.34 | 43.1 | 0 | 898.87 | 4.73 | 4" PVC SDR-53 |
| 5 | 11 | FB | 903.0 | 379th STREET | 6+53.9 | 116 | 896.98 | 44.6 | 0 | 898.54 | 4.46 | 4" PVC SDR-54 |
| 5 | 12 | FB | 902.6 | 379th STREET | 7+04.7 | 66 | 896.78 | 43.7 | 0 | 898.32 | 4.28 | 4" PVC SDR-55 |

| REV NO. | DATE | DESCRIPTION |
|---|---|---|
| 1 | 04/01/2025 | REVISION PER CITY REVIEW |
| 2 | 04/24/2025 | REVISION PER CITY REVIEW |
| 3 | 05/29/2025 | REVISION PER CITY & COUNTY REVIEW |

DATE: 05/29/2025
DESIGN BY: MJM
DRAWN BY: MJM
CHECKED BY: CJD
DWG FILE: DETAILS
FILE NO.: 22-0030.00

I hereby certify that this plan, specification, or report was prepared by me or under my direct supervision and that I am a duly Licensed Professional Engineer under the laws of the State of Minnesota.

NOT FOR CONSTRUCTION

Signed: Christopher J. Dahn

Date: Lic. No. 58628


BOGART, PEDERSON & ASSOCIATES, INC.
LAND SURVEYING
CIVIL ENGINEERING
ENVIRONMENTAL SERVICES
13076 FIRST STREET, BECKER, MN 55308-9322
TEL: 763-262-9622 FAX: 763-262-9644


CEDAR RIDGE COMMUNITY LLC
CEDAR RIDGE COMMUNITY
City of North Branch, Chisago County, MN

SERVICE INFORMATION

SHEET NO.

C6.8

N:\Projects Current\22-0030.02 Belzer North Branch Plat\Civil\CAD Files\NB Cover Sht\PP9.dwg 5/29/2025 5:31 PM

## LEGEND:

- SAWCUT LOCATION (FULL DEPTH)
- TURN ARROW (TYPICAL)
- STRAIGHT ARROW (TYPICAL)
- PERMANENT SIGNAGE
- 980.50 TP — NEW TOP OF PAVEMENT ELEVATION

## TURN LANE NOTES:

1. THE CONTRACTOR SHALL NOTE ANY DISCREPANCIES BETWEEN EXISTING CONDITIONS IN THE FIELD REPRESENTED WITHIN THE PLANS AS SHOWN AND ALERT THE ENGINEER BEFORE BIDDING THE PROJECT AND BEGINNING CONSTRUCTION.
2. CONTRACTOR SHALL LOCATE AND VERIFY ALL UTILITIES WHICH MAY AFFECT THIS WORK AND NOTIFY THE OWNER OF ANY CHANGES. CONTACT LOCAL UTILITY COMPANIES FOR EXACT LOCATIONS PRIOR TO BIDDING THE PROJECT AND COMMENCING WORK.
3. CONTRACTOR SHALL TAKE NECESSARY PRECAUTIONS TO PREVENT SILT AND DEBRIS RUN-OFF DURING GRADING OPERATIONS (I.E. SILT FENCE, STRAW BALES, ETC.).
4. CONTRACTOR SHALL VERIFY CRITICAL ELEVATIONS TO ENSURE CONFORMANCE WITH GRADING PLAN, PARTICULARLY WITH EXISTING STRUCTURES AND/OR PAVEMENTS TO REMAIN. MEET EXISTING GRADES ALONG STREETS, PROPERTY LINES, AND DRIVEWAY ENTRANCES. RESTORE ALL PAVEMENTS THAT REMAIN TO THEIR ORIGINAL IF NOT BETTER CONDITION. NOTIFY OWNER OF ANY CONFLICTS PRIOR TO BIDDING THE PROJECT.
5. LONGITUDINAL PAVEMENT MARKINGS SHALL BE LATEX PAINT. THE TURN ARROWS SHALL BE PREFORMED THERMO.
6. EXISTING CONFLICTING PAVEMENT MARKINGS WILL NEED TO BE REMOVED BEFORE FINAL PERMANENT STRIPING IS PLACED.
7. DURING CONSTRUCTION, CONFLICTING PAVEMENT MARKINGS WILL NEED TO BE COVERED WITH BLACK REMOVABLE LANE TAPE OR WATER BLASTED AND THEN HAVE PAVEMENT MARKINGS INSTALLED FOR TEMPORARY CENTERLINE DURING CONSTRUCTION.
8. ALL SIGNAGE TO MEET MASH-16 REQUIREMENTS. ALL SIGN SHEETING SHALL BE 3M DG3. STOP SIGNS SHALL USE 2 1/2" SQUARE-TUBE RISER POST. (SEE MNDOT DETAIL)

0' 50' 100'
SCALE: 1"=50'

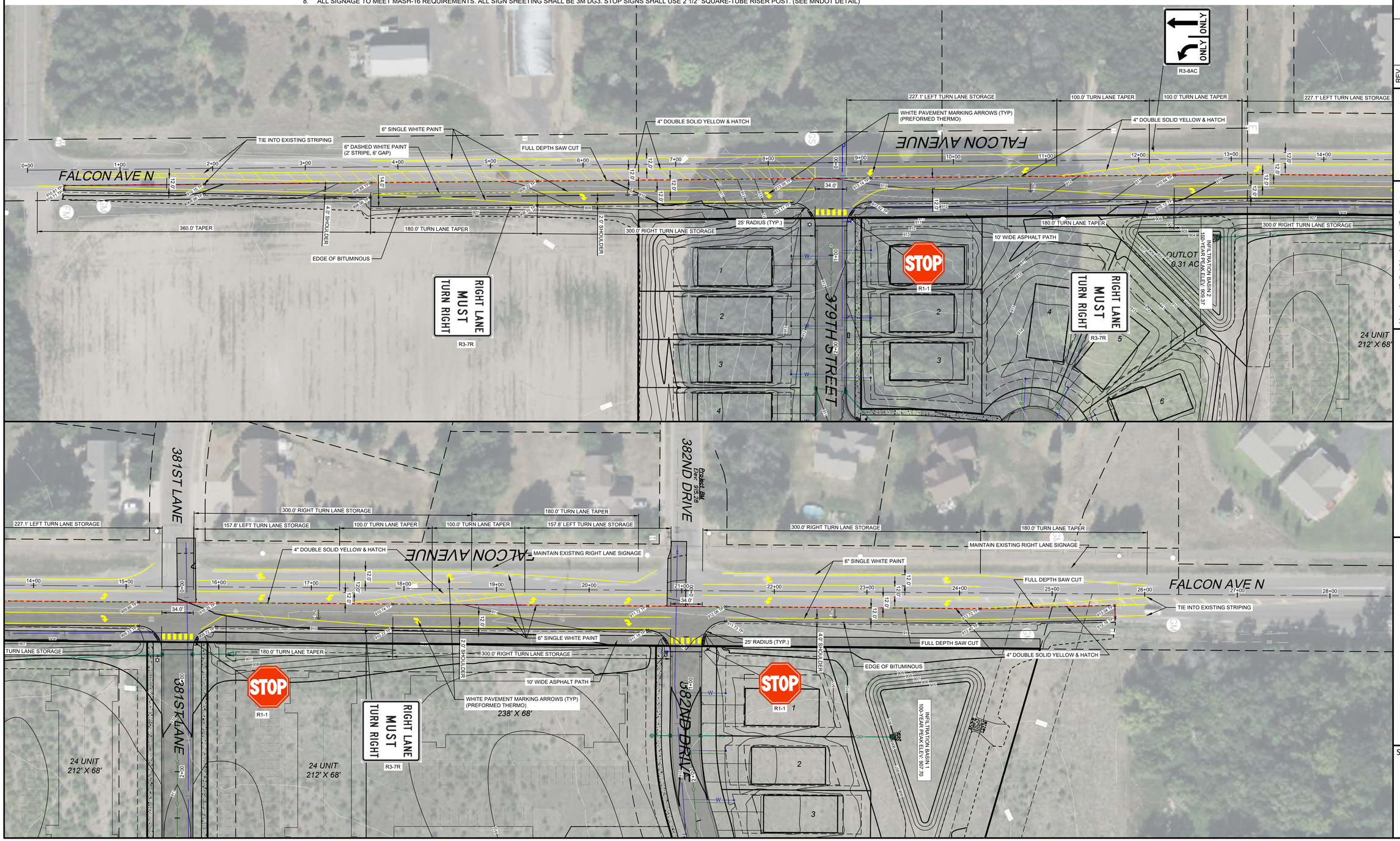


| REV NO. | DATE | DESCRIPTION |
|---|---|---|
| 1 | 04/01/2025 | REVISION PER CITY REVIEW |
| 2 | 04/24/2025 | REVISION PER CITY REVIEW |
| 3 | 05/29/2025 | REVISION PER CITY & COUNTY REVIEW |

DATE: 05/29/2025
DESIGN BY: MJM
DRAWN BY: MJM
CHECKED BY: CJD
DWG FILE: EROSION
FILE NO.: 22-0030.00

I hereby certify that this plan, specification, or report was prepared by me or under my direct supervision and that I am a duly Licensed Professional Engineer under the laws of the State of Minnesota.

Signed: Christopher J. Dahn
Date: Lic. No. 58628

NOT FOR CONSTRUCTION


BOGART, PEDERSON & ASSOCIATES, INC.
LAND SURVEYING
CIVIL ENGINEERING
ENVIRONMENTAL SERVICES
13076 FIRST STREET, BECKER, MN 55308-9322
TEL. 763-262-9322 FAX 763-262-3844


CEDAR RIDGE COMMUNITY LLC
CEDAR RIDGE COMMUNITY
City of North Branch, Chisago County, MN

TURN LANE PLAN

SHEET NO.
C7.1

N:\Projects Current\22-0030.00 Belcher North Branch Plat\Civil\CAD Files\NB Turn Lane.dwg 5/29/2025 5:31 PM

## LEGEND:

- TYPE II CHANNELIZER DRUMS
- SIGN

0' 100' 200'
SCALE: 1"=100'

## TRAFFIC CONTROL PLAN NOTES:

1. SIGNS TO FOLLOW CONVENTIONAL ROAD SIZINGS (36" X 36" COMMON)
2. TRAFFIC CONTROL SHALL MEET THE MINNESOTA MANUAL ON UNIFORM TRAFFIC CONTROL.
3. ALL TEMPORARY TRAFFIC CONTROL SIGNS TO BE ON SKIDS.
4. ADDITIONAL SIGNS AND CHANNELIZERS SHALL BE SUPPLIED AND MOVED BY CONTRACTOR AS NEEDED FOR SAFE ROAD CONSTRUCTION.
5. CONTRACTOR SHALL PROVIDE ADDITIONAL TRAFFIC CONTROL SIGNS, CHANNELIZERS, AND FLAGGERS AS NEEDED.
6. EXISTING CONFLICTING PAVEMENT MARKINGS WILL NEED TO BE REMOVED BEFORE FINAL PERMANENT STRIPING IS PLACED.
7. DURING CONSTRUCTION, CONFLICTING PAVEMENT MARKINGS WILL NEED TO BE COVERED WITH BLACK REMOVABLE LANE TAPE OR WATER BLASTED AND THEN HAVE PAVEMENT MARKINGS INSTALLED FOR TEMPORARY CENTERLINE DURING CONSTRUCTION.

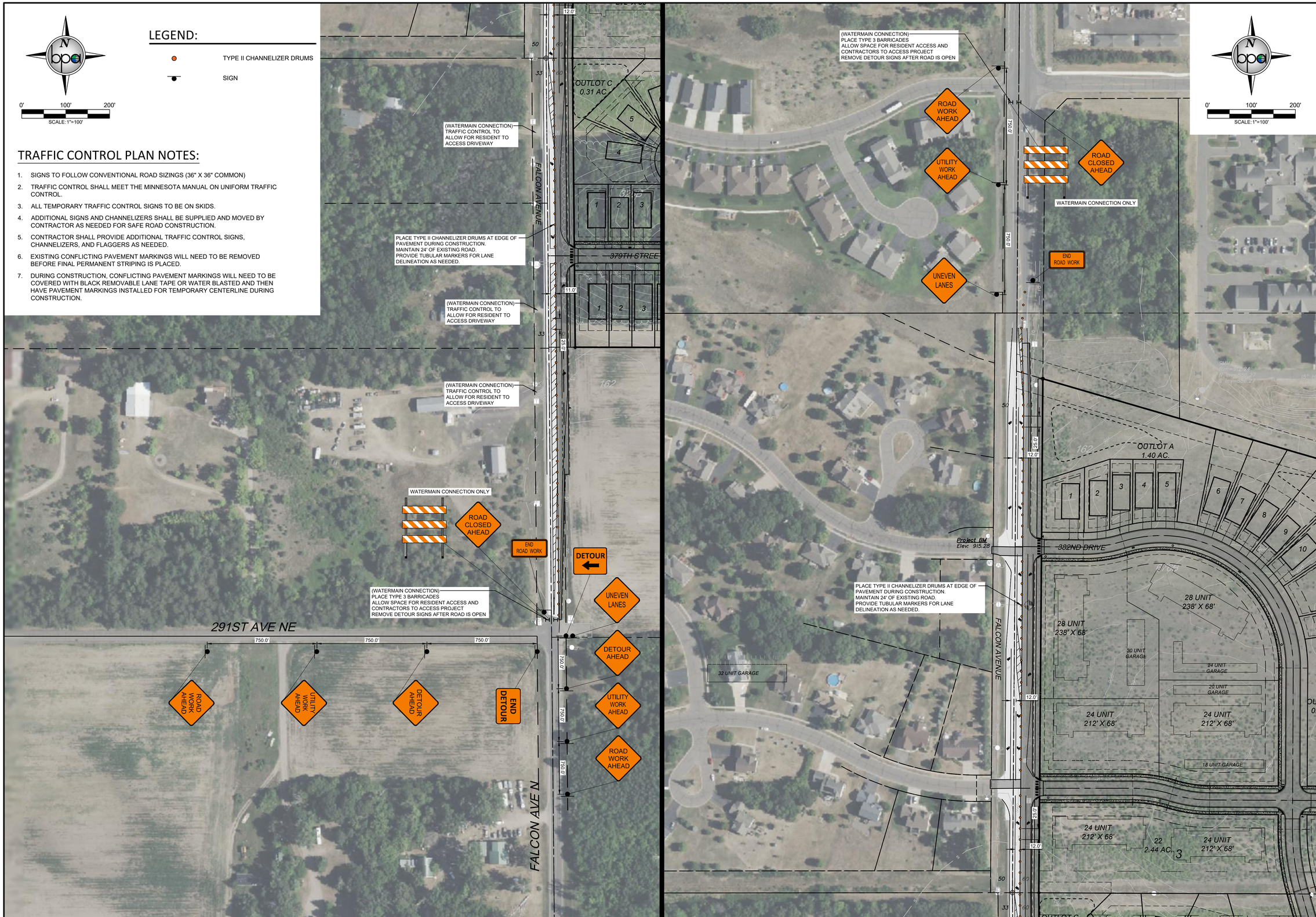


| REV NO. | DATE | DESCRIPTION |
|---|---|---|
| 1 | 04/01/2025 | REVISION PER CITY REVIEW |
| 2 | 04/24/2025 | REVISION PER CITY REVIEW |
| 3 | 05/29/2025 | REVISION PER CITY & COUNTY REVIEW |

DATE: 05/29/2025
DESIGN BY: MJM
DRAWN BY: MJM
CHECKED BY: CJD
DWG FILE: SITE BASE
FILE NO.: 22-0030.00

I hereby certify that this plan, specification, or report was prepared by me or under my direct supervision and that I am a duly Licensed Professional Engineer under the laws of the State of Minnesota.

NOT FOR CONSTRUCTION

Signed: Christopher J. Dahn
Date: Lic. No. 58628


BOGART, PEDERSON & ASSOCIATES, INC.
LAND SURVEYING
CIVIL ENGINEERING
ENVIRONMENTAL SERVICES
13076 FIRST STREET, BECKER, MN 55308-9322
TEL: 763-262-9322 FAX: 763-262-9844


CEDAR RIDGE COMMUNITY LLC
CEDAR RIDGE COMMUNITY
City of North Branch, Chisago County, MN

TRAFFIC CONTROL PLAN (TURN LANE)

SHEET NO.
C7.2

N:\Projects Current\22-0030.00 Belcher North Branch Plat\Civil\CAD Files\NB Traffic Control.dwg 5:32 PM 5/29/2025

| REV NO. | DATE | DESCRIPTION |
|---|---|---|
| 1 | 04/01/2025 | REVISION PER CITY REVIEW |
| 2 | 04/24/2025 | REVISION PER CITY REVIEW |
| 3 | 05/29/2025 | REVISION PER CITY & COUNTY REVIEW |

DATE: 05/29/2025
DESIGN BY: MJM
DRAWN BY: MJM
CHECKED BY: CJD
DWG FILE: SITE BASE
FILE NO.: 22-0030.00

I hereby certify that this plan, specification, or report was prepared by me or under my direct supervision and that I am a duly Licensed Professional Engineer under the laws of the State of Minnesota.

NOT FOR CONSTRUCTION

Signed: Christopher J. Dahn

Date: Lic. No. 58628

BOGART, PEDERSON & ASSOCIATES, INC.
LAND SURVEYING
CIVIL ENGINEERING
ENVIRONMENTAL SERVICES
13076 FIRST STREET, BECKER, MN 55308-9322
TEL: 763-262-9322 FAX: 763-262-3844

CEDAR RIDGE COMMUNITY LLC
CEDAR RIDGE COMMUNITY
City of North Branch, Chisago County, MN

TRAFFIC CONTROL PLAN (DETOUR)

SHEET NO.

C7.3

5/29/2025 5:32 PM N:\Projects Current\22-0030.00 Belcher North Branch Plat\Civil\CAD Files\NB Traffic Control.dwg

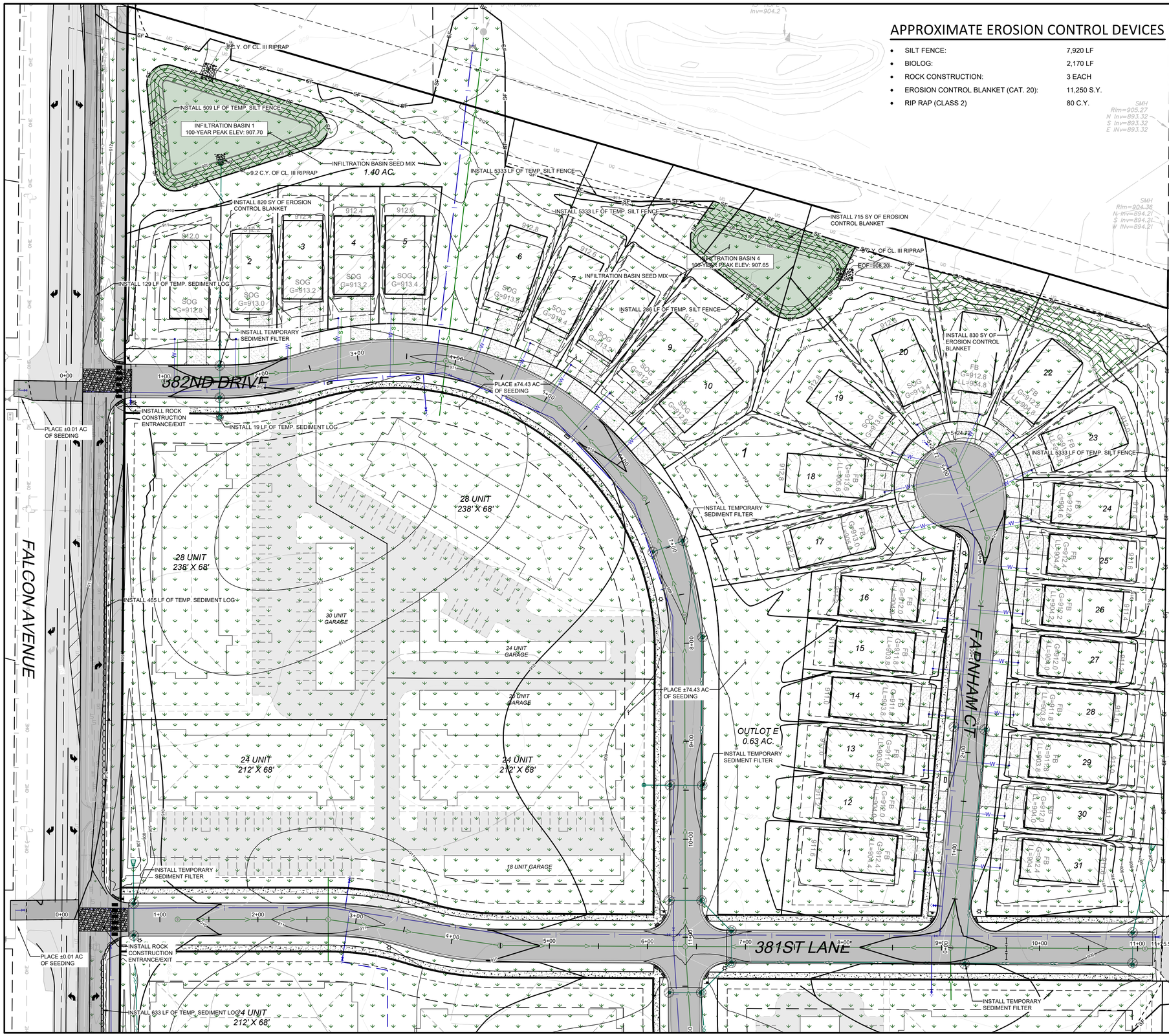


## APPROXIMATE EROSION CONTROL DEVICES

| | |
|---|---|
| • SILT FENCE: | 7,920 LF |
| • BIOLOG: | 2,170 LF |
| • ROCK CONSTRUCTION: | 3 EACH |
| • EROSION CONTROL BLANKET (CAT. 20): | 11,250 S.Y. |
| • RIP RAP (CLASS 2) | 80 C.Y. |

0' 50' 100'
SCALE: 1"=50'

## LEGEND:

- TEMPORARY ROCK CONSTRUCTION ENTRANCE
- EROSION CONTROL BLANKET (CAT. 20)
- SF — GRADING LIMITS AND PROPOSED TEMPORARY SILT FENCE
- FIBER-LOG ROLLS
- PROPOSED RIP RAP
- 984 — PROPOSED CONTOUR
- E.O.F. — EMERGENCY OVERFLOW
- TEMPORARY SEDIMENT FILTER- HIGH FLOW

## EROSION CONTROL NOTES:

1. CONTRACTOR SHALL CONFINE CONSTRUCTION OPERATIONS TO THE CONSTRUCTION/GRADING LIMITS SHOWN.
2. ALL WORK SHALL CONFORM TO THE MINNESOTA POLLUTION CONTROL AGENCY'S STORM WATER PERMIT REQUIREMENTS. CONTRACTOR SHALL OBTAIN ALL PERMITS AND COMPLY WITH ALL PERMIT REQUIREMENTS.
3. THE SITE SOIL EROSION AND SEDIMENT CONTROL FACILITIES SHALL BE INSTALLED PRIOR TO ANY DEMOLITION OR GRADING OPERATIONS AND MAINTAINED TO CONFORM WITH THE STANDARDS SPECIFIED BY THE PERMIT.
4. CONTRACTOR SHALL INSPECT TEMPORARY EROSION CONTROL MEASURES ON THE ENTIRE SITE AT LEAST EVERY 7 DAYS AND WITHIN 24 HOURS OF ANY MEASURABLE RAINSTORM. DAMAGED SILT FENCE OR OTHER EROSION CONTROL DEVICES OR PRACTICES SHALL BE REPAIRED IMMEDIATELY. INSPECTION AND MAINTENANCE OF DEVICES SHALL CONTINUE UNTIL THE SITE HAS UNDERGONE FINAL STABILIZATION AND A NOTICE OF TERMINATION IS SUBMITTED TO THE MPCA.
5. ALL GRADING OPERATIONS SHALL BE CONDUCTED IN A MANNER TO MINIMIZE THE POTENTIAL FOR SITE EROSION.
6. THE SITE SOIL EROSION AND SEDIMENT CONTROL FACILITIES SHALL BE INSTALLED AND MAINTAINED TO CONFORM WITH THE STANDARDS SPECIFIED BY THE CITY OF NORTH BRANCH AND THE MPCA.
7. EROSION CONTROL MEASURES SHALL BE INSTALLED PRIOR TO THE DISTURBANCE OF ANY AREAS AND MAINTAINED UNTIL ALL TRIBUTARY DISTURBED AREAS ARE RESTORED.
8. THE CONTRACTOR SHALL BE RESPONSIBLE FOR THE REMOVAL OF ALL EROSION CONTROL MEASURES, INCLUDING SILT FENCE AND BALES, UPON ESTABLISHMENT OF PERMANENT VEGETATION IN SAID AREAS.
9. ALL SOILS TRACKED ONTO PAVEMENT OR ANY OTHER OFF-SITE AREA SHALL BE REMOVED DAILY.
10. THE SITE SEDIMENT CONTROL FACILITIES FOR THE PROJECT MUST BE INSTALLED PRIOR TO ANY GRADING OPERATION.
11. ALL AREAS DISTURBED DURING CONSTRUCTION SHALL BE RESTORED AND VEGETATED AS SOON AS POSSIBLE. ANY FINISHED AREAS SHALL BE SEEDED AND MULCHED WITHIN 7 DAYS AFTER FINISHED GRADING IS COMPLETED IN ACCORDANCE TO MN/DOT 2575.
12. ALL DISTURBED AREAS SHALL BE REVEGETATED WITH MN/DOT SEED MIX, MULCHED, FERTILIZED & DISK ANCHORED, PER THE FOLLOWING SCHEDULE:

| | |
|---|---|
| STANDARD SEED MIX 25-131: | 220 LB/AC. |
| INFILTRATION BASIN SEED MIX 33-261: | 35 LB/AC. |
| FERTILIZER 22-5-10: | 350 LB/AC. |
| MULCH TYPE 3: | 2 TONS/AC. |

13. CONTRACTOR SHALL INSTALL TEMPORARY SEDIMENT BMP'S SHOWN AND NOT SHOWN ON PLANS DURING PHASING ON PROJECT TO COMPLY WITH MPCA, CITY INSPECTOR AND DEVELOPER REQUEST.

| REV NO. | DATE | DESCRIPTION |
|---|---|---|
| 1 | 04/01/2025 | REVISION PER CITY REVIEW |
| 2 | 04/24/2025 | REVISION PER CITY REVIEW |
| 3 | 05/29/2025 | REVISION PER CITY & COUNTY REVIEW |

DATE: 05/29/2025
DESIGN BY: MJM
DRAWN BY: MJM
CHECKED BY: CJD
DWG FILE: EROSION
FILE NO.: 22-0030.00

I hereby certify that this plan, specification, or report was prepared by me or under my direct supervision and that I am a duly Licensed Professional Engineer under the laws of the State of Minnesota.

NOT FOR CONSTRUCTION

Signed: Christopher J. Dahn
Date: Lic. No. 58628

BOGART, PEDERSON & ASSOCIATES, INC.
LAND SURVEYING
CIVIL ENGINEERING
ENVIRONMENTAL SERVICES
13076 FIRST STREET, BECKER, MN 55308-9322
TEL: 763-262-9822 FAX: 763-262-9844

CEDAR RIDGE COMMUNITY LLC
CEDAR RIDGE COMMUNITY
City of North Branch, Chisago County, MN

NORTH EROSION CONTROL PLAN

SHEET NO.
C8.1

N:\Projects Current\22-0030.02 Becker North Branch\Plat\Civil\CAD Files\NB Erosion Control.dwg 5/29/2025 5:33 PM

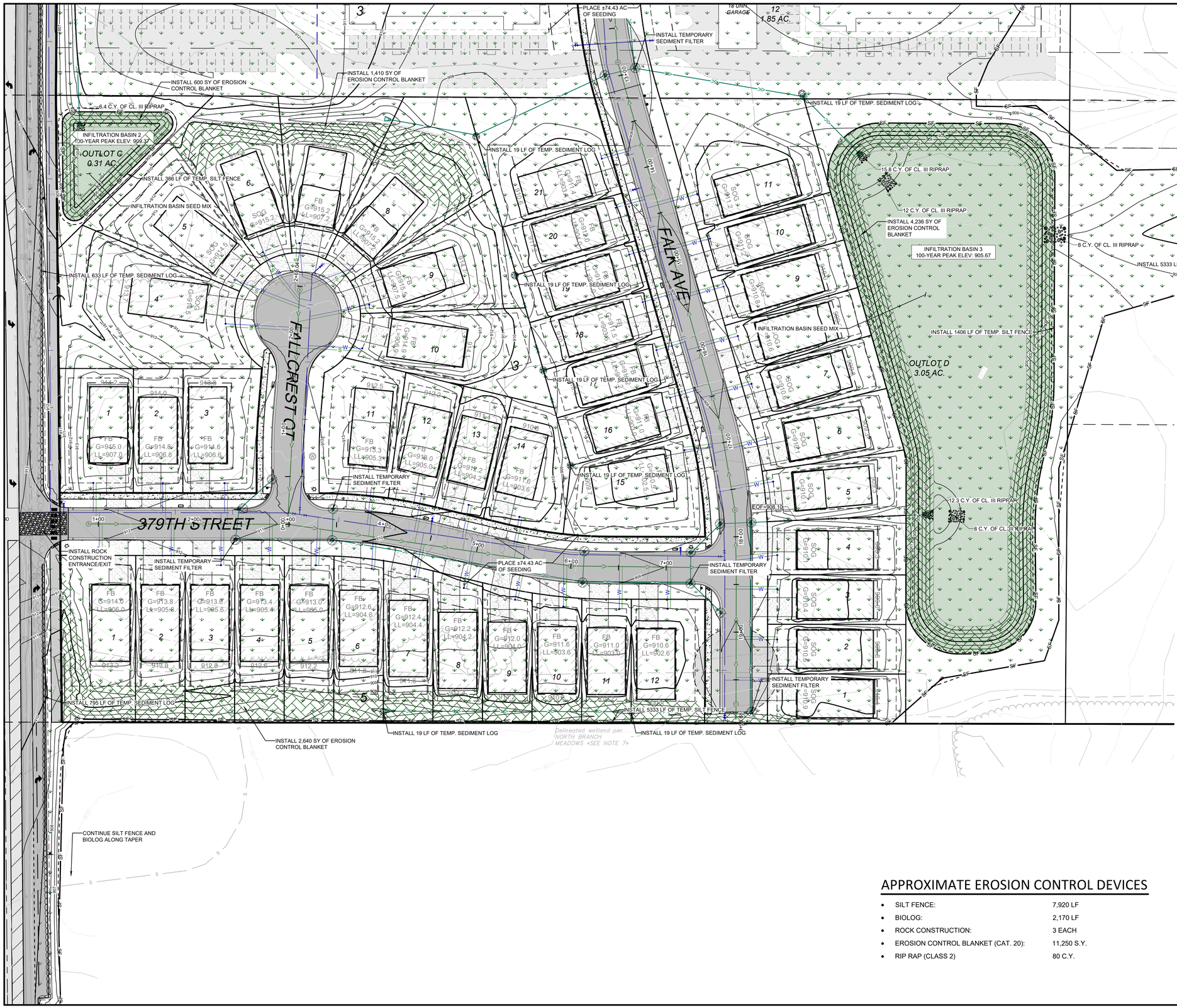


## LEGEND:

- TEMPORARY ROCK CONSTRUCTION ENTRANCE
- EROSION CONTROL BLANKET (CAT. 20)
- SF — GRADING LIMITS AND PROPOSED TEMPORARY SILT FENCE
- FIBER-LOG ROLLS
- PROPOSED RIP RAP
- 984 — PROPOSED CONTOUR
- E.O.F. — EMERGENCY OVERFLOW
- TEMPORARY SEDIMENT FILTER- HIGH FLOW

## EROSION CONTROL NOTES:

1. CONTRACTOR SHALL CONFINE CONSTRUCTION OPERATIONS TO THE CONSTRUCTION/GRADING LIMITS SHOWN.
2. ALL WORK SHALL CONFORM TO THE MINNESOTA POLLUTION CONTROL AGENCY'S STORM WATER PERMIT REQUIREMENTS. CONTRACTOR SHALL OBTAIN ALL PERMITS AND COMPLY WITH ALL PERMIT REQUIREMENTS.
3. THE SITE SOIL EROSION AND SEDIMENT CONTROL FACILITIES SHALL BE INSTALLED PRIOR TO ANY DEMOLITION OR GRADING OPERATIONS AND MAINTAINED TO CONFORM WITH THE STANDARDS SPECIFIED BY THE PERMIT.
4. CONTRACTOR SHALL INSPECT TEMPORARY EROSION CONTROL MEASURES ON THE ENTIRE SITE AT LEAST EVERY 7 DAYS AND WITHIN 24 HOURS OF ANY MEASURABLE RAINSTORM. DAMAGED SILT FENCE OR OTHER EROSION CONTROL DEVICES OR PRACTICES SHALL BE REPAIRED IMMEDIATELY. INSPECTION AND MAINTENANCE OF DEVICES SHALL CONTINUE UNTIL THE SITE HAS UNDERGONE FINAL STABILIZATION AND A NOTICE OF TERMINATION IS SUBMITTED TO THE MPCA.
5. ALL GRADING OPERATIONS SHALL BE CONDUCTED IN A MANNER TO MINIMIZE THE POTENTIAL FOR SITE EROSION.
6. THE SITE SOIL EROSION AND SEDIMENT CONTROL FACILITIES SHALL BE INSTALLED AND MAINTAINED TO CONFORM WITH THE STANDARDS SPECIFIED BY THE CITY OF NORTH BRANCH AND THE MPCA.
7. EROSION CONTROL MEASURES SHALL BE INSTALLED PRIOR TO THE DISTURBANCE OF ANY AREAS AND MAINTAINED UNTIL ALL TRIBUTARY DISTURBED AREAS ARE RESTORED.
8. THE CONTRACTOR SHALL BE RESPONSIBLE FOR THE REMOVAL OF ALL EROSION CONTROL MEASURES, INCLUDING SILT FENCE AND BALES, UPON ESTABLISHMENT OF PERMANENT VEGETATION IN SAID AREAS.
9. ALL SOILS TRACKED ONTO PAVEMENT OR ANY OTHER OFF-SITE AREA SHALL BE REMOVED DAILY.
10. THE SITE SEDIMENT CONTROL FACILITIES FOR THE PROJECT MUST BE INSTALLED PRIOR TO ANY GRADING OPERATION.
11. ALL AREAS DISTURBED DURING CONSTRUCTION SHALL BE RESTORED AND VEGETATED AS SOON AS POSSIBLE. ANY FINISHED AREAS SHALL BE SEEDED AND MULCHED WITHIN 7 DAYS AFTER FINISHED GRADING IS COMPLETED IN ACCORDANCE TO MN/DOT 2575.
12. ALL DISTURBED AREAS SHALL BE REVEGETATED WITH MN/DOT SEED MIX, MULCHED, FERTILIZED & DISK ANCHORED, PER THE FOLLOWING SCHEDULE:

| | |
|---|---|
| STANDARD SEED MIX 25-131: | 220 LB/AC. |
| INFILTRATION BASIN SEED MIX 33-261: | 35 LB/AC. |
| FERTILIZER 22-5-10: | 350 LB/AC. |
| MULCH TYPE 3: | 2 TONS/AC. |

13. CONTRACTOR SHALL INSTALL TEMPORARY SEDIMENT BMP'S SHOWN AND NOT SHOWN ON PLANS DURING PHASING ON PROJECT TO COMPLY WITH MPCA, CITY INSPECTOR AND DEVELOPER REQUEST.

## APPROXIMATE EROSION CONTROL DEVICES

| | |
|---|---|
| • SILT FENCE: | 7,920 LF |
| • BIOLOG: | 2,170 LF |
| • ROCK CONSTRUCTION: | 3 EACH |
| • EROSION CONTROL BLANKET (CAT. 20): | 11,250 S.Y. |
| • RIP RAP (CLASS 2) | 80 C.Y. |

| REV NO. | DATE | DESCRIPTION |
|---|---|---|
| 1 | 04/01/2025 | REVISION PER CITY REVIEW |
| 2 | 04/24/2025 | REVISION PER CITY REVIEW |
| 3 | 05/29/2025 | REVISION PER CITY & COUNTY REVIEW |

DATE: 05/29/2025
DESIGN BY: MJM
DRAWN BY: MJM
CHECKED BY: CJD
DWG FILE: EROSION
FILE NO.: 22-0030.00

I hereby certify that this plan, specification, or report was prepared by me or under my direct supervision and that I am a duly Licensed Professional Engineer under the laws of the State of Minnesota.

NOT FOR CONSTRUCTION

Signed: Christopher J. Dahn
Date: Lic. No. 58628

BOGART, PEDERSON & ASSOCIATES, INC.
LAND SURVEYING
CIVIL ENGINEERING
ENVIRONMENTAL SERVICES
13076 FIRST STREET, BECKER, MN 55308-9322
TEL: 763-262-9822 FAX: 763-262-9844

CEDAR RIDGE COMMUNITY LLC
CEDAR RIDGE COMMUNITY
City of North Branch, Chisago County, MN

SOUTH EROSION CONTROL PLAN

SHEET NO.
C8.2

# STORM WATER POLLUTION PREVENTION PLAN NARRATIVE:

GENERAL INFORMATION

THIS STORMWATER POLLUTION PREVENTION PLAN IS PREPARED IN ACCORDANCE TO THE NATIONAL POLLUTANT DISCHARGE ELIMINATION SYSTEM PERMIT NO. MN R1000001 FOR STORMWATER DISCHARGES ASSOCIATED WITH CONSTRUCTION ACTIVITY.
PROJECT NAME: CEDAR RIDGE COMMUNITY
LOCATION: FALCON AVE N, NORTH BRANCH MN. 55056
CHISAGO COUNTY
LAT/LONG: 45.501044, -93.000047

DESCRIPTION OF CONSTRUCTION ACTIVITY:

DEVELOPMENT CONSISTS OF PAVING, GRADING, UTILITY INSTALLATION, AND TURF ESTABLISHMENT.

PROJECT CONTACTS

CEDAR RIDGE COMMUNITY LLC AND THE CONTRACTOR ARE RESPONSIBLE FOR IMPLEMENTATION OF THE SWPPP AND THE INSTALLATION, INSPECTION, AND MAINTENANCE OF THE EROSION PREVENTION AND SEDIMENT CONTROL BMP'S BEFORE AND DURING CONSTRUCTION.

SWPPP PREPARATION:
SWPPP PREPARER: MICHAEL MORDAL-HUEBSCH
-BOGART, PEDERSON & ASSOCIATES
TRAINING: ENGINEER AND SWPPP DESIGNER (EXP 2023)
ADDRESS: 13076 FIRST STREET
BECKER, MN 53308-9322
TELEPHONE: 763-262-8822
EMAIL; CDAHN@BOGART-PEDERSON,COM
OWNER:
OWNER CONTACT: JASON BETZLER
ADDRESS: 12222 313TH AVE, PRINCETON, MN 55371
TELEPHONE: (763)-360-1453
EMAIL; MILLELACSWALLEYE@LIVE.COM

CONTRACTOR (TO BE FILLED OUT BY THE CONTRACTOR):
BUSINESS NAME _____
OWNER NAME _____
MAILING ADDRESS _____
CITY _____
TELEPHONE _____
EMAIL _____
CONTACT NAME _____
MAILING ADDRESS _____
CITY _____
TELEPHONE _____
EMAIL _____

ESTIMATED DATES OF CONSTRUCTION:

START DATE ___/___/___ (TO BE FILLED IN BY CONTRACTOR)
COMPLETION DATE ___/___/___ (TO BE FILLED IN BY CONTRACTOR)

PERMANENT STORMWATER DESIGN CALCULATIONS:

SEE THE STORM WATER MANAGEMENT REPORT FOR MORE INFORMATION. CONTACT BOGART, PEDERSON & ASSOCIATES FOR REPORT. PROPOSED FLOW RATE IS LIMITED THROUGH DIRECTING STORM WATER TO FOUR INFILTRATION BASINS.
SOIL GROUP: A

DESCRIPTION OF EROSION CONTROL ACTIVITY:

EROSION CONTROL CONSISTS OF SILT FENCE PERIMETER CONTROL, TURF ESTABLISHMENT THROUGH SEEDING AND EROSION CONTROL BLANKET, AND ROCK CONSTRUCTION ENTRANCE PLACEMENT.

CUMULATIVE IMPERVIOUS SURFACES:

| | | |
|---|---|---|
| AREA OF DISTURBANCE: | 42.6 | ACRES |
| PRE-CONSTRUCTION IMPERVIOUS AREA: | 1.49 | ACRES |
| POST CONSTRUCTION IMPERVIOUS AREA: | 14.32 | ACRES |
| NEW IMPERVIOUS AREA: | 12.83 | ACRES |

RECEIVING WATERS:

STORM WATER FROM THIS SITE WILL BE DISCHARGED TO THE FOUR INFILTRATION BASINS ON SITE.

PLANS AND SPECIFICATIONS

THE PLAN SHEETS OF THIS PLAN SET INDICATE THE FOLLOWING ITEMS:
- THE PROJECT LOCATION AND CONSTRUCTION LIMITS.
- LOCATIONS OF IMPERVIOUS SURFACES.
- LOCATIONS OF AREAS NOT TO BE DISTURBED (E.G., BUFFER ZONES, WETLANDS, ETC.).
- STEEP SLOPE LOCATIONS.
- LOCATIONS OF ALL TEMPORARY AND PERMANENT EROSION AND SEDIMENT CONTROL BMP'S TO BE INSTALLED ON THE PROJECT.
- THE DETAIL SHEETS INDICATE EROSION AND SEDIMENT CONTROL BMPS TO BE INSTALLED ON THE PROJECT.
- IF DEWATERING IS REQUIRED FOR THIS PROJECT, THE PUMP DISCHARGE SHALL BE TREATED PRIOR TO BEING DISCHARGED OFF-SITE OR INTO A SURFACE WATER. THE DISCHARGE SHALL BE VISUALLY CHECKED TO ENSURE THAT IT IS VISIBLY CLEAN WATER.

TEMPORARY SEDIMENT CONTROL PRACTICES

DOWN GRADIENT SILT FENCE AND SEDIMENT LOG INSTALLATIONS ARE TO BE INPLACE PRIOR TO THE COMMENCEMENT OF ANY EARTHWORK OPERATIONS.

TOPSOIL IS TO BE WINDROWED ALONG THE CONSTRUCTION LIMITS AND PLACED AS SLOPE DRESSING IMMEDIATELY FOLLOWING COMPLETION OF THE GRADING OPERATIONS, AS THE GRADING OPERATIONS PROCEED.

TOPSOIL PLACEMENT ALONG THE EMBANKMENT SLOPES THOUGH THE WETLANDS AREA IS TO BE SPREAD BY A LOW IMPACT CRAWLER TRACTOR OPERATING UP AND DOWN THE SLOPES SO AS TO PROVIDE TRACK PRINTS PARALLEL WITH THE CONTOURS.

INSTALLATION OF MN/DOT CATEGORY 3 EROSION CONTROL BLANKET ALONG THE EMBANKMENT SLOPES ADJACENT THE WETLANDS AREA.

ALL TEMPORARY SOILS STOCKPILES WILL REQUIRE AN EFFECTIVE MEANS OF SEDIMENT CONTROL SUCH AS AN EROSION CONTROL BLANKET COVERING OR SILT FENCE INSTALLATION ALONG THE TOE OF SLOPE.

ALL COMPLETED SWALES SLOPES AND BOTTOMS NOT DRAINING TOWARDS WETLAND AREAS ARE TO BE STABILIZED WITHIN 7 DAYS.

TEMPORARY STABILIZATION WILL BE REQUIRED IN AREAS WHERE GRADING OPERATIONS ARE SUSPENDED OR CEASED FOR A PERIOD OF 7 DAYS OR GREATER.

A ROCK CONSTRUCTION ENTRANCE FOR SEDIMENT CONTROL IS TO BE PROVIDED AT THE PROJECT ENTRANCE ON FALCON AVE N.

STREET SWEEPING OF THE PAVED SURFACES WILL BE REQUIRED AS DIRECTED BY THE ENGINEER.

TIMING OF EROSION CONTROL:

SILT FENCE AND SEDIMENT LOGS WILL BE INSTALLED PRIOR TO CONSTRUCTION.

RIPRAP AND FILTER BLANKET WILL BE PLACED AT THE OUTLETS WITHIN 24 HOURS OF THE OUTLET PLACEMENT.

THE CONTRACTOR MUST STABILIZE ALL EXPOSED SOIL AREAS IMMEDIATELY FOLLOWING CONSTRUCTION WHEREVER CONSTRUCTION WILL NOT OCCUR FOR A PERIOD GREATER THAN OR EQUAL TO 7 DAYS.

STABILIZATION WORK MUST BE COMPLETE WITHIN 7 CALENDAR DAYS AFTER THE CONSTRUCTION WORK IN THAT AREA HAS TEMPORARILY OR PERMANENTLY CEASED.

AREAS THAT ARE WITHIN 200 FT OF A PUBLIC WATER MUST BE STABILIZED WITHIN 24 HOURS OF COMPLETING CONSTRUCTION DURING PERIODS OF "WORK IN WATER RESTRICTIONS" FOR TIME PERIODS DECLARED BY THE DNR.

THE CONTRACTOR IS RESPONSIBLE TO MAINTAIN THE DISTURBED AREA UNTIL VEGETATION IN ESTABLISHED.

ONCE VEGETATION IS ESTABLISHED AND CONSTRUCTION IS COMPLETE, THE SILT FENCE AND ANY OTHER TEMPORARY EROSION CONTROL THAT IS NOT BIODEGRADABLE SHALL BE REMOVED.

STREET SWEEPING TO BE PROVIDED AS DIRECTED BY THE ENGINEER OR OWNER. THE CITY REQUIRES STREET SWEEPING TO OCCUR WITHIN 8 HOURS OF NOTICE FROM THE CITY.

APPLYING MULCH, HYDROMULCH, TACKIFIER, POLYACRYLAMIDE OR SIMILAR EROSION PREVENTION PRACTICES IS NOT ACCEPTABLE STABILIZATION IN ANY PART OF A TEMPORARY OR PERMANENT DRAINAGE DITCH OR SWALE. BLANKETS OR OTHER APPROVED, BY THE ENGINEER, METHOD SHALL BE USED.

INSPECTION AND MAINTENANCE ACTIVITIES

THE CONTRACTOR SHALL BE RESPONSIBLE FOR COORDINATING AND SCHEDULING THE WORK OF ALL OPERATIONS, INCLUDING SUBCONTRACTORS AND UTILITY COMPANIES, SUCH THAT EROSION AND SEDIMENT CONTROL MEASURES ARE FULLY EXECUTED FOR EACH OPERATION AND IN A TIMELY MANNER OVER THE DURATION OF THE PROJECT. OPERATORS HAVE DAILY ACCESS TO THE PROJECT SITE. THE CONTRACTOR SHALL BE FULLY RESPONSIBLE FOR THE SWPPP IMPLEMENTATION UNTIL THE ENTIRE SITE HAS UNDERGONE FINAL STABILIZATION AND N.O.T HAS BEEN SUBMITTED TO THE MPCA.

THE CONTRACTOR IS TO PROVIDE A TRAINED INDIVIDUAL RESPONSIBLE FOR THE IMPLEMENTATION, INSPECTION AND MAINTENANCE OF THE EROSION AND SEDIMENT CONTROL BMPS ON THE PROJECT. THAT INDIVIDUAL IS TO BE IDENTIFIED AT THE PRE-CONSTRUCTION CONFERENCE AND LISTED IN THE MINUTES THEREOF.

THE APPOINTED INDIVIDUAL IS TO PERFORM A ROUTINE INSPECTION OF THE ENTIRE SITE AT LEAST ONCE EVERY SEVEN DAYS DURING CONSTRUCTION OPERATIONS AND WITHIN 24 HOURS AFTER A RAINFALL EVENT GREATER THAN 0.5 INCHES IN 24 HOURS.

A INSPECTION FORM WILL BE PROVIDED BY THE CONTRACTOR. ANY DEFICIENCIES IN THE EROSION AND SEDIMENT CONTROL BMPS ARE TO BE NOTED ON THE INSPECTION FORM AND CORRECTED BY THE END OF THE NEXT BUSINESS DAY.

PERIMETER CONTROL DEVICES ARE TO BE REPAIRED OR REPLACED WHEN THEY ARE NO LONGER EFFECTIVE OR WHEN THE SEDIMENT REACHES ONE-HALF THE HEIGHT OF THE DEVICE.

TRAINING DOCUMENTATION:
SWPPP IMPLEMENTATION, REVISING, AMENDING, AND INSPECTING (TO BE FILLED IN BY THE CONTRACTOR)
NAME OF INDIVIDUAL
OVERSEEING & INSPECTING _____
DATE OF TRAINING _____
NAME OF INSTRUCTOR _____
ENTITY PROVIDING TRAINING _____
CONTENT OF TRAINING _____
TOTAL HOURS OF TRAINING _____

BMP INSTALLATION, MAINTENANCE, AND REPAIR (TO BE FILLED IN BY THE CONTRACTOR)
NAME OF INDIVIDUAL
OVERSEEING & INSPECTING _____
DATE OF TRAINING _____
NAME OF INSTRUCTOR _____
ENTITY PROVIDING TRAINING _____
CONTENT OF TRAINING _____
TOTAL HOURS OF TRAINING _____

POLLUTION PREVENTION

FERTILIZERS ARE TO BE APPLIED ONLY IN THE AMOUNTS AS SPECIFIED AND WORKED INTO THE SOIL TO MINIMIZE EXPOSURE TO STORMWATER RUNOFF.

ONSITE REFUELING OPERATIONS ARE TO BE CONDUCTED WITH CARE. ANY INADVERTENT SPILLAGE OF FUEL OR CHEMICALS IS TO BE IMMEDIATELY CLEANED UP, REMOVED FROM THE SITE AND DISPOSED OF IN ACCORDANCE TO STATE AND LOCAL REGULATIONS. MAJOR SPILLS ARE TO BE REPORTED TO THE MPCA 24 HOUR NOTIFICATION NETWORK AT 800 422 0798. ALL VEHICLES ON-SITE ARE TO BE MONITORED FOR LEAKS AND SUBJECT TO ROUTINE PREVENTIVE MAINTENANCE EFFORTS TO REDUCE THE LIKELIHOOD OF LEAKAGE AND OR SPILLS.

PORTABLE SANITARY WASTE FACILITIES ARE TO BE PROVIDED ONSITE AND EMPTIED ON A BI-WEEKLY BASIS.

CONCRETE BATCH TRUCKS WILL NOT BE ALLOWED TO DISCHARGE DRUM AND CHUTE WASHOUT DIRECTLY ON THE GROUND. A PORTABLE WASHOUT RECEPTACLE IS TO BE PROVIDED BY THE CONTRACTOR AT THE LOCATION AS PROVIDED BY THE OWNER.

FINAL STABILIZATION

FINAL STABILIZATION OCCURS WHEN 70 PERCENT OF THE PERVIOUS AREA IS COVERED WITH UNIFORM, PERMANENT VEGETATION.

ALL TEMPORARY EROSION AND SEDIMENT CONTROL FEATURES ARE TO BE REMOVED AND THE NPDES NOTICE OF TERMINATION IS TO BE PREPARED AND SUBMITTED TO THE MPCA.

LOCATION OF SWPPP REQUIREMENTS IN PROJECT PLAN

| DESCRIPTION | TITLE | LOCATION |
|---|---|---|
| EROSION CONTROL DETAILS | CONSTRUCTION DETAILS | C9.1-C9.4 |
| EROSION CONTROL LOCATIONS | EROSION CONTROL LOCATIONS | C8.1-C8.2 |

24 HOUR MPCA EMERGENCY NOTIFICATION:
TELEPHONE NUMBERS: 651-649-5451
800-422-0798

ESTIMATED QUANTITIES:

THE FOLLOWING QUANITITES IS AN ESTIMATED PRELIMINARY AMOUNT REQUIRED FOR SEDIMENT CONTROL BMP'S AT THE START OF THE PROJECT. THIS ESTIMATE IS PROVIDED AS REQUIRED BY THE MINNESOTA POLLUTION CONTROL AGENCY GENERAL STORMWATER PERMIT FOR CONSTRUCTION ACTIVITY. ANY ADDITIONAL AND/OR REPLACEMENT BMP'S QUANTITIES WILL BE FURNISHED AND INSTALLED BY THE CONTRACTOR AT NO ADDITIONAL COST TO THE OWNER.

ESTIMATED PRELIMINARY QUANTITIES AT START OF PROJECT:

| ITEM | UNIT | ESTIMATED INITIAL QUANTITY |
|---|---|---|
| TEMPORARY CONSTRUCTION ENTRANCE | EA | 3 |
| TEMPORARY SEDIMENT FILTER | EA | 35 |
| TEMPORARY CONCRETE WASHOUT | EA | 1 |
| TEMPORARY PUMP SEDIMENT CONTROL DEVICE | EA | 1 |
| TEMPORARY SEDIMENT LOGS | LF | 2,170 |
| TEMPORARY SILT FENCE | LF | 7,920 |
| EROSION CONTROL BLANKET (CAT. 20) | SY | 11,250 |

TEMPORARY EROSION AND SEDIMENT CONTROL SPECIFICATIONS

PART 1 GENERAL

1.01 SECTION INCLUDES

A. PREVENTION OF SEDIMENTATION OF WATERWAYS, OPEN DRAINAGE WAYS, AND STORM AND SANITARY SEWERS DUE TO CONSTRUCTION ACTIVITIES.

1.02 REFERENCE STANDARDS

A. GENERAL PERMIT AUTHORIZATION TO DISCHARGE STORM WATER ASSOCIATED WITH CONSTRUCTION ACTIVITY UNDER THE NATIONAL POLLUTANT DISCHARGE ELIMINATION SYSTEM. MINNESOTA PERMIT NO: MN R100001.

1.03 PERFORMANCE REQUIREMENTS

A. COMPLY WITH ALL REQUIREMENTS OF THE MINNESOTA POLLUTION CONTROL AGENCY FOR EROSION AND SEDIMENT CONTROL.

B. DO NOT BEGIN CLEARING, GRADING, OR OTHER WORK INVOLVING DISTURBANCE OF GROUND SURFACE COVER UNTIL APPLICABLE PERMITS HAVE BEEN OBTAINED; FURNISH ALL DOCUMENTATION REQUIRED TO OBTAIN APPLICABLE PERMITS.
1. OBTAIN AND PAY FOR PERMITS REQUIRED BY AUTHORITY HAVING JURISDICTION.

C. TIMING: PUT PREVENTIVE MEASURES IN PLACE PRIOR TO DISTURBANCE OF SURFACE COVER AND BEFORE PRECIPITATION OCCURS.

D. EROSION OFF SITE: PREVENT EROSION OF SOIL AND DEPOSITION OF SEDIMENT ON OTHER PROPERTIES CAUSED BY WATER LEAVING THE PROJECT SITE DUE TO CONSTRUCTION ACTIVITIES FOR THIS PROJECT.
1. PREVENT TRACKING OF MUD ONTO PUBLIC ROADS OUTSIDE SITE.
2. PREVENT MUD AND SEDIMENT FROM FLOWING ONTO PAVEMENTS.

E. SEDIMENTATION OF WATERWAYS OFF SITE: PREVENT SEDIMENTATION OF WATERWAYS OFF THE PROJECT SITE, INCLUDING RIVERS, STREAMS, LAKES, PONDS, OPEN DRAINAGE WAYS, STORM SEWERS, AND SANITARY SEWERS.
1. IF SEDIMENTATION OCCURS, INSTALL OR CORRECT PREVENTIVE MEASURES IMMEDIATELY AT NO COST TO OWNER; REMOVE DEPOSITED SEDIMENTS; COMPLY WITH REQUIREMENTS OF AUTHORITIES HAVING JURISDICTION.

F. MAINTENANCE: MAINTAIN TEMPORARY PREVENTIVE MEASURES UNTIL PERMANENT MEASURES HAVE BEEN ESTABLISHED.

PART 2 PRODUCTS

2.01 MATERIALS

A. TEMPORARY SILT FENCE: WOVEN POLYPROPYLENE GEOTEXTILE RESISTANT TO COMMON SOIL CHEMICALS, MILDEW, AND INSECTS; NON-BIODEGRADABLE; IN LONGEST LENGTHS POSSIBLE; FABRIC INCLUDING SEAMS WITH THE FOLLOWING MINIMUM AVERAGE ROLL LENGTHS:
1. AVERAGE OPENING SIZE: 20 U.S. STD. SIEVE, MAXIMUM, WHEN TESTED IN ACCORDANCE WITH ASTM D4751.
2. PERMITTIVITY: 0.05 SEC^-1, MINIMUM, WHEN TESTED IN ACCORDANCE WITH ASTM D4491.
3. ULTRAVIOLET RESISTANCE: RETAINING AT LEAST 70 PERCENT OF TENSILE STRENGTH, WHEN TESTED IN ACCORDANCE WITH ASTM D4355/D4355M AFTER 500 HOURS EXPOSURE.
4. TENSILE STRENGTH: 100 LB-F, MINIMUM, IN CROSS-MACHINE DIRECTION; 124 LB-F, MINIMUM, IN MACHINE DIRECTION; WHEN TESTED IN ACCORDANCE WITH ASTM D4632.
5. ELONGATION: 15 TO 30 PERCENT, WHEN TESTED IN ACCORDANCE WITH ASTM D4632.
6. TEAR STRENGTH: 55 LB-F, MINIMUM, WHEN TESTED IN ACCORDANCE WITH ASTM D4533.
7. COLOR: MANUFACTURER'S STANDARD, WITH EMBEDMENT AND FASTENER LINES PREPRINTED.
8. SILT FENCE POSTS: ONE OF THE FOLLOWING, MINIMUM 5 FEET LONG:
a. STEEL U- OR T-SECTION, WITH MINIMUM MASS OF 1.33 LB PER LINEAR FOOT.
b. SOFTWOOD, 4 BY 4 INCHES IN CROSS SECTION.
c. HARDWOOD, 2 BY 2 INCHES IN CROSS SECTION.

B. TEMPORARY SEDIMENT LOGS: FILTER LOGS SHALL CONSIST OF TYPE WOOD FIBER BIOROLLS AND THE REQUIREMENTS OF MNDOT SPEC. 3897.
1. SHALL BE ONE OF THE FOLLOWING.
a. SHALL BE SILTSOXX PERIMETER CONTROL BY FILTREXX, INC., OR EQUAL.

C. TEMPORARY SEDIMENT FILTER.
1. SHALL BE ONE OF THE FOLLOWING.
a. DROP-IN SEDIMENT FILTER UNIT THAT INSERTS INTO THE INLET.
1) SHALL BE FLEXSTORM PURE: PERMANENT INLET FILTER BY ADS, INC., OR EQUAL.
(a)PROVIDE CURB OPENING PROTECTION FOR EXISTING INLETS WITH CURB OPENINGS.

D. TEMPORARY ROCK CONSTRUCTION ENTRANCE.
1. ROCK SHALL BE CLEAN 1 TO 2 INCH WASHED ROCK.

E. TEMPORARY SLOPE EROSION PROTECTION.
1. SHALL BE ONE OF THE FOLLOWING.
a. EROSION CONTROL BLANKET.
1) SHALL CONSIST OF A UNIFORM WEB OF INTERLOCKING STRAW OR WOOD FIBERS SANDWICHED BETWEEN AN ATTACHED TOP AND BOTTOM LAYER OF NET BACKING.
2) THE NETTING SHALL BE BIODEGRADABLE CONTAINING SUFFICIENT UV STABILIZATION FOR BREAKDOWN TO OCCUR WITHIN A NORMAL GROWING SEASON.
3) STAPLES USED TO ANCHOR THE BLANKETS SHALL BE U-SHAPED, 11 GAUGE OR HEAVIER STEEL WIRE HAVING A SPAN WIDTH OF 1 INCH AND A LENGTH OF 8 INCHES OR MORE FROM TOP TO BOTTOM AFTER BENDING.
4) THE EROSION CONTROL BLANKETS ACCEPTABLE FOR USE ON THIS PROJECT INCLUDE:
(a)GEO-SYNTHETICS, INC., - LANDLOK 52.
(b)NORTH AMERICAN GREEN - S150.
(c)OR EQUAL.
b. BONDED FIBER MATRIX.
1) THE FIBERS SHALL BE COMPOSED OF 100% WOOD OR WOOD BY-PRODUCTS. A MINIMUM OF 25% OF THE FIBERS SHALL AVERAGE 10.16 MM (0.4 INCHES) IN LENGTH AND 50% OR MORE SHALL BE RETAINED ON A CLARK FIBER CLASSIFIER 24 MESH SCREEN. FIBERS SHALL BE COLORED WITH A WATER SOLUBLE, NON-TOXIC DYE, TO AID IN UNIFORM APPLICATION OVER THE SITE.
2) THE BINDER SHALL BE A HYDRO COLLOID BASED (GUAR GUM) WITH ADDED SLOW-RELEASE AND AGRICULTURAL BASED FERTILIZERS. THE BINDER SHALL NOT DISSOLVE OR DISPERSE UPON REWETTING.
3) THE BFM SLURRY SHALL DRY TO FORM A CRUST APPROXIMATELY 3-6 MM (1/8 TO 1/4 INCHES) THICK ADHERING TO THE SOIL SURFACE.
4) THE MOISTURE CONTENT OF THE MATRIX SHALL BE 12% +/- 3% BY WEIGHT.
5) THE MATRIX SHALL CONSIST OF MATERIALS THAT ARE 100% BIODEGRADABLE AND 100% BENEFICIAL TO PLANT LIFE.
6) THE MATRIX SHALL PROVIDE 100% CONTINUOUS COVERAGE AND SHALL HAVE NO HOLES GREATER THAN 1MM IN SIZE.
7) THE HYDRATED MIXTURE DENSITY SHALL BE APPROXIMATED BY A SLUMP TEST PRIOR TO APPLICATION.
8) THE BFM MULCH: WATER RATIO SHALL BE AS MANUFACTURER RECOMMENDATIONS. THE MINIMUM BFM MULCH TO WATER RATIO IS 50LBS BFM MULCH AND 100 GALLONS WATER. THE WATER RATE WILL VARY BETWEEN 100 GALLONS AND 125 GALLONS PER 50LBS, DEPENDING ON WHICH OF THE PRODUCTS IS USED.
9) THE BONDED FIBER MATRIX MULCH PRODUCTS ACCEPTABLE FOR USE ON THIS PROJECT INCLUDE.
(a)ECOAEGIS - MANUFACTURED BY CANFOR.
(b)SOIL GUARD - MANUFACTURED BY MAT, INC.
(c)CONWED 3000 - MANUFACTURED BY CONWED FIBERS, INC.

F. TEMPORARY PUMPED SEDIMENT CONTROL DEVICE.
1. NON-WOVEN GEOTEXTILE FABRIC SEWN INTO A BAG USING A DOUBLE NEEDLE MACHINE AND HIGH STRENGTH THREAD.
a. SEAMS SHALL HAVE AN AVERAGE WIDTH STRENGTH OF 60LB/INCH AS PER ASTM D4883 AND MEET OR EXCEED THE FOLLOWING.
1) GRAB TENSILE OF 205 LBS AS PER ASTM D 4632.
2) PUNCTURE OF 110 LBS AS PER ASTM D 4833.
3) FLOW RATE OF 95 GAL/MIN/SF AS PER ASTM D 4491.
4) PERMITTIVITY OF 1.5 SEC-1 AS PER ASTM D 4491.
5) MULLEN BURST STRENGTH OF 350 PSI AS PER ASTM D 3786.
6) AOS% OF 80% US SIEVE AS PER ASTM D 4751.
2. SPOUT LARGE ENOUGH TO ACCOMMODATE A 4 INCH DISCHARGE HOSE WITH STRAP TO TIE UNIT CLOSED.
3. SHALL BE ONE OF THE FOLLOWING.
a. DIRTBAG.
1) ACF ENVIRONMENTAL, INC., 2831 CARDWELL ROAD, RICHMOND, VIRGINIA 23234, 800-448-3636.
b. DANDY DEWATERING BAG.
1) DANDY PRODUCTS, INC., P.O. BOX 1980, WESTERVILLE, OHIO 43086, 800-591-2284.
c. OR EQUAL.

PART 3 EXECUTION

3.01 PREPARATION

A. SCHEDULE WORK SO THAT SOIL SURFACES ARE LEFT EXPOSED FOR THE MINIMUM AMOUNT OF TIME.

B. THE CONSTRUCTION SITE OPERATOR SHALL FOLLOW ALL REQUIREMENTS OF THE MINNESOTA STORMWATER PERMIT NO. MN R100001.

C. THE CONTRACTOR SHALL COMPLETE AND SIGN THE NOTICE OF INTENT, OBTAIN THE OWNER'S SIGNATURE, AND SUBMIT TO THE MPCA.
1. PROVIDE A SIGNED COPY TO THE OWNER.

3.03 INSTALLATION

A. TEMPORARY ROCK CONSTRUCTION ENTRANCE.
1. THE ROCK AREA SHALL BE A MINIMUM OF 6 INCHES DEEP, EXTEND THE FULL WIDTH OF THE EGRESS AREA AND SHALL BE AT LEAST 50FT LONG, HOWEVER, LONGER ENTRANCES MAY BE REQUIRED TO ADEQUATELY CLEAN THE TIRES.
2. GEOTEXTILE FABRIC MAY BE USED TO PREVENT MIGRATION OF MUD FROM THE UNDERLYING SOIL INTO THE ROCK.

B. TEMPORARY SILT FENCES:
1. STORE AND HANDLE FABRIC IN ACCORDANCE WITH ASTM D4873.
2. USE NOMINAL 30 INCH HIGH BARRIERS, MINIMUM 60 INCH LONG POSTS SPACED AT 6 FEET MAXIMUM SPACING.
3. EMBED BOTTOM OF FABRIC IN A TRENCH ON THE UPSLOPE SIDE OF FENCE, WITH 6 INCHES OF FABRIC LAID FLAT ON BOTTOM OF TRENCH FACING UPSLOPE; BACKFILL TRENCH AND COMPACT.
4. MINIMUM POST EMBEDMENT.
a. STEEL POST = 24 INCHES, MINIMUM.
b. WOOD POST = 18 INCHES, MINIMUM.
5. DO NOT SPLICE FABRIC WIDTH; MINIMIZE SPLICES IN FABRIC LENGTH; SPLICE AT POST ONLY, OVERLAPPING AT LEAST 18 INCHES, WITH EXTRA POST.
6. FASTEN FABRIC TO WOOD POSTS USING ONE OF THE FOLLOWING:
a. FOUR NAILS PER POST WITH 3/4 INCH DIAMETER FLAT OR BUTTON HEAD, 1 INCH LONG, AND 14 GAGE, 0.083 INCH SHANK DIAMETER.
b. FIVE STAPLES PER POST WITH AT LEAST 17 GAGE, 0.0453 INCH WIRE, 3/4 INCH CROWN WIDTH AND 1/2 INCH LONG LEGS.
7. FASTEN FABRIC TO STEEL POSTS USING WIRE, NYLON CORD, OR INTEGRAL POCKETS.

C. TEMPORARY SEDIMENT LOGS:
1. PERIMETER CONTROL SHOULD BE INSTALLED PARALLEL TO THE BASE OF THE SLOPE OR OTHER DISTURBED AREA.
2. STAKES SHOULD BE INSTALLED THROUGH THE MIDDLE OF THE PERIMETER CONTROL ON 10 FT CENTERS, USING 2 IN BY 2 IN BY
3 FT WOODEN STAKES. IN THE EVENT STAKING IS NOT POSSIBLE, I.E., WHEN PERIMETER CONTROL IS USED ON PAVEMENT, HEAVY CONCRETE BLOCKS SHALL BE USED BEHIND THE PERIMETER CONTROL TO HELP STABILIZE DURING RAIN EVENTS.

D. TEMPORARY SEDIMENT FILTERS.
1. DROP-IN SEDIMENT TRAP.
a. PLACE AS RECOMMENDED BY THE MANUFACTURER.

E. TEMPORARY PUMPED SEDIMENT CONTROL DEVICE.
1. INSTALL AS PER MANUFACTURER'S RECOMMENDATIONS.

F. TEMPORARY SLOPE EROSION PROTECTION.
1. PLACE AT ANY AND ALL FINISH SLOPES THAT ARE STEEPER THAN 10H:1V.
2. SEED AND FERTILIZE PER SPECIFICATION 32 9219 PRIOR TO INSTALLING TEMPORARY SLOPE EROSION PROTECTION.
3. BONDED FIBER MATRIX.
a. INSTALL THE BFM AS PER THE MANUFACTURER'S INSTRUCTIONS WITH THE FOLLOWING MINIMUM GUIDELINES.
1) THE BFM SHALL BE APPLIED WITH HYDRAULIC SPRAY EQUIPMENT BY A MANUFACTURER'S CERTIFIED APPLICATOR.
2) APPLICATION SHALL BE DONE AT LEAST 24 HOURS IN ADVANCE OF PROJECTED RAINFALL TO ALLOW THE BFM MULCH ADEQUATE TIME TO DRY.
3) THE BFM MULCH SHALL BE APPLIED IN TWO STAGES (ONE-HALF RATE) WITH AMPLE TIME TO DEWATER THE FIRST APPLICATION.
4) THE BFM MULCH SHALL BE APPLIED FROM AT LEAST TWO ALTERNATE DIRECTIONS, PREFERABLY 90 DEGREES APART, IF POSSIBLE, TO ENSURE ALL SOIL FACES ARE COVERED.
5) THE INSTALLATION RATE OF THE BFM MULCH SHALL BE 3500 LBS PER ACRE, MINIMUM AND 100% COVERAGE.
4. EROSION CONTROL BLANKET.
a. INSTALL AS PER MANUFACTURER'S RECOMMENDATIONS.

3.04 MAINTENANCE

A. INSPECT PREVENTIVE MEASURES WEEKLY, WITHIN 24 HOURS AFTER THE END OF ANY STORM THAT PRODUCES 0.5 INCHES OR MORE RAINFALL AT THE PROJECT SITE, AND DAILY DURING PROLONGED RAINFALL.

B. REPAIR DEFICIENCIES IMMEDIATELY.

C. TEMPORARY SILT FENCES:
1. PROMPTLY REPLACE FABRIC THAT DETERIORATES UNLESS NEED FOR FENCE HAS PASSED.
2. REMOVE SILT DEPOSITS THAT EXCEED ONE-THIRD OF THE HEIGHT OF THE FENCE.
3. REPAIR FENCES THAT ARE UNDERCUT BY RUNOFF OR OTHERWISE DAMAGED, WHETHER BY RUNOFF OR OTHER CAUSES.

D. TEMPORARY CONSTRUCTION EXIT.
1. PERIODIC ADDITION OF ROCK, OR REMOVAL AND REPLACEMENT OF PAD SHALL BE PROVIDED AS VOIDS BECOME FILLED WITH SOIL.

E. TEMPORARY PUMPED SEDIMENT CONTROL DEVICE.
1. REPLACE THE UNIT WHEN 1/2 FULL OF SEDIMENT OR WHEN SEDIMENT HAS REDUCED THE FLOW RATE OF THE PUMP DISCHARGE TO AN IMPRACTICAL RATE.

F. PLACE SEDIMENT IN APPROPRIATE LOCATIONS ON SITE; DO NOT REMOVE FROM SITE.

3.05 CLEAN UP

A. REMOVE TEMPORARY MEASURE AFTER PERMANENT VEGETATION HAS BEEN ESTABLISHED.

B. WHERE REMOVAL OF TEMPORARY MEASURES WOULD LEAVE EXPOSED SOIL, SHAPE SURFACE TO AN ACCEPTABLE GRADE AND FINISH TO MATCH ADJACENT GROUND SURFACES.

END OF SECTION

IMPAIRED WATERS MAP

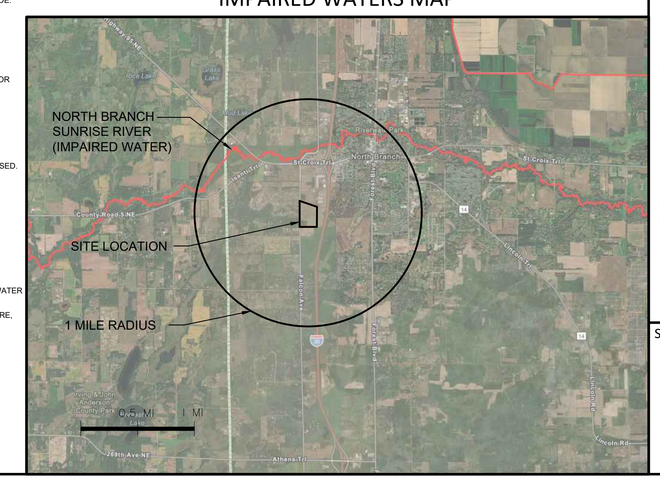


| REV NO. | DATE | DESCRIPTION |
|---|---|---|
| 1 | 04/01/2025 | REVISION PER CITY REVIEW |
| 2 | 04/24/2025 | REVISION PER CITY REVIEW |
| 3 | 05/29/2025 | REVISION PER CITY & COUNTY REVIEW |

DATE: 05/29/2025
DESIGN BY: MJM
DRAWN BY: MJM
CHECKED BY: CJD
DWG FILE: SWPPP
FILE NO.: 22-0030.00

I hereby certify that this plan, specification, or report was prepared by me or under my direct supervision and that I am a duly Licensed Professional Engineer under the laws of the State of Minnesota.

NOT FOR CONSTRUCTION

Signed: Christopher J. Dahn
Date: Lic. No. 58628

BOGART, PEDERSON & ASSOCIATES, INC.
LAND SURVEYING
CIVIL ENGINEERING
ENVIRONMENTAL SERVICES
13076 FIRST STREET, BECKER, MN 55308-9322
TEL: 763-262-8822 FAX: 763-262-8844

CEDAR RIDGE COMMUNITY LLC
CEDAR RIDGE COMMUNITY
City of North Branch, Chisago County, MN

SWPPP NARRATIVE

SHEET NO.
C8.3

N:\Projects Current\22-0030.02 Bedker North Branch\Plat\Civil\CAD Files\NB Cover\SWPPP.dwg
5:33 PM 5/29/2025

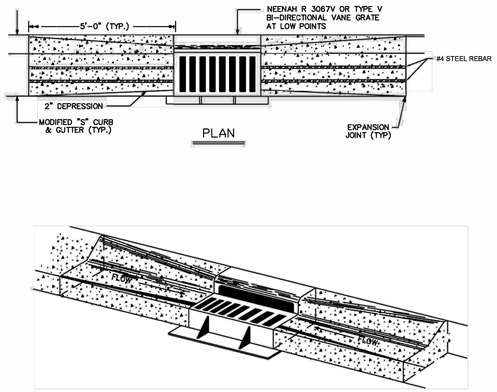


NOTE: MODIFIED "S" CURB & GUTTER TO BE FORMED INTO B618 TYPE CURB AT CATCH BASIN CASTING

| | | |
|---|---|---|
| NORTH BRANCH | CITY OF NORTH BRANCH<br>SURMOUNTABLE CURB AND GUTTER AT CATCH BASIN<br>NO SCALE | 2025 - STANDARD DETAIL<br>DETAIL NO.<br>RDW - 004 |

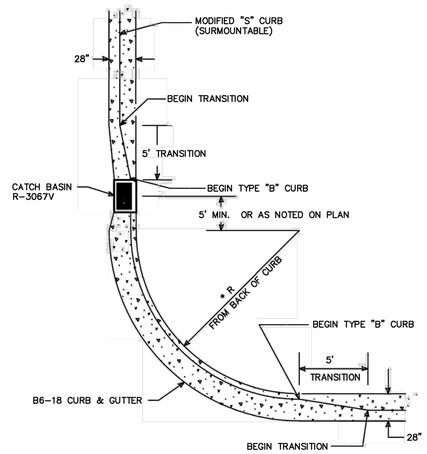


NOTES:
1. SEE STANDARD DETAIL PLATE FOR CONCRETE CURB AND GUTTER DETAILS

| | | |
|---|---|---|
| NORTH BRANCH | CITY OF NORTH BRANCH<br>STREET RADIUS FOR CONCRETE CURB AND GUTTER<br>NO SCALE | 2025 - STANDARD DETAIL<br>DETAIL NO.<br>RDW - 005 |

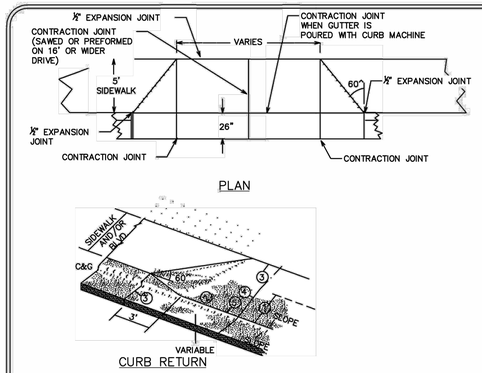


① WITHOUT SIDEWALK PAVEMENT ONLY TO END OF CURB RETURN WHEN ENTRANCE IS UNSURFACED OR CONSTRUCTION IS NOT NEEDED BEYOND THIS POINT.
② WITH SIDEWALK PAVEMENT TO BACK EDGE OF SIDEWALK PAID FOR AS CONCRETE DRIVEWAY PAVEMENT
③ 1/2" EXPANSION JOINT
④ CONTRACTION JOINT (FORMED OR SAWED)
⑤ DRIVEWAY NEED NOT BE POURED MONOLITHICALLY WITH CURB & GUTTER

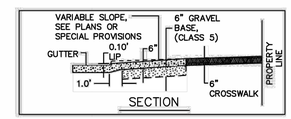


NOTE:
1 PAYMENT SHALL BE FROM BACK OF CURB
2 WHERE SIDEWALKS EXIST OR ARE PROPOSED THE DRIVEWAY APRON SHALL EXTEND TO THE BACK OF SIDEWALK
3 #4 STEEL AT 2' OC TO BE USED WHEN DRIVEWAY SLAB IS NOT POURED INTEGRAL WITH GUTTER

| | | |
|---|---|---|
| NORTH BRANCH | CITY OF NORTH BRANCH<br>TYPICAL RESIDENTIAL CONCRETE DRIVEWAY APRON<br>NO SCALE | 2025 - STANDARD DETAIL<br>DETAIL NO.<br>RDW - 006 |

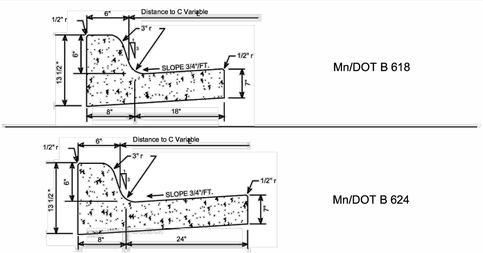


NOTE: A MINIMUM OF 3" OF CLASS 5 AGGREGATE BASE SHALL BE USED UNDER ALL CURB AND GUTTER.

| | | |
|---|---|---|
| NORTH BRANCH | CITY OF NORTH BRANCH<br>CONCRETE CURB AND GUTTER<br>NO SCALE | 2025 - STANDARD DETAIL<br>DETAIL NO.<br>RDW - 003 |

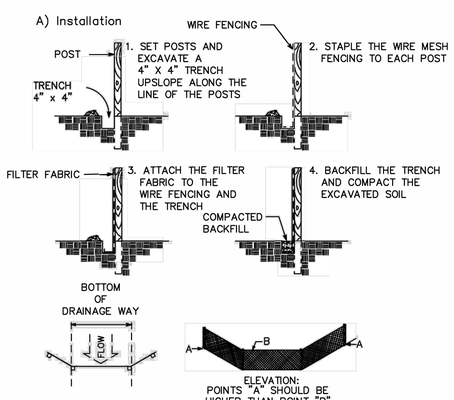


B) Maintenance
1. FILTER BARRIERS SHALL BE INSPECTED IMMEDIATELY AFTER EACH RAINFALL AND AT LEAST DAILY DURING PROLONGED RAINFALL. ANY REQUIRED REPAIRS SHALL BE MADE IMMEDIATELY.
2. SHOULD THE FABRIC DECOMPOSE OR BECOME INEFFECTIVE PRIOR TO THE END OF THE EXPECTED USEABLE LIFE AND THE BARRIER STILL BE NECESSARY, THE FABRIC SHALL BE REPLACED PROMPTLY.
3. SEDIMENT DEPOSITS SHOULD BE REMOVED AFTER EACH STORM EVENT. THEY MUST BE REMOVED WHEN DEPOSITS REACH APPROXIMATELY 1/3 THE HEIGHT OF THE BARRIER.
4. ANY SEDIMENT DEPOSITS REMAINING IN PLACE AFTER THE SILT FENCE OR FILTER BARRIER IS NO LONGER REQUIRED SHALL BE DRESSED TO CONFORM WITH THE EXISTING GRADE, PREPARED AND SEEDED, OR REMOVED

| | | |
|---|---|---|
| NORTH BRANCH | CITY OF NORTH BRANCH<br>PLACEMENT AND CONSTRUCTION OF SILT FENCE<br>NO SCALE | 2025 - STANDARD DETAIL<br>DETAIL NO.<br>ERO-001 |

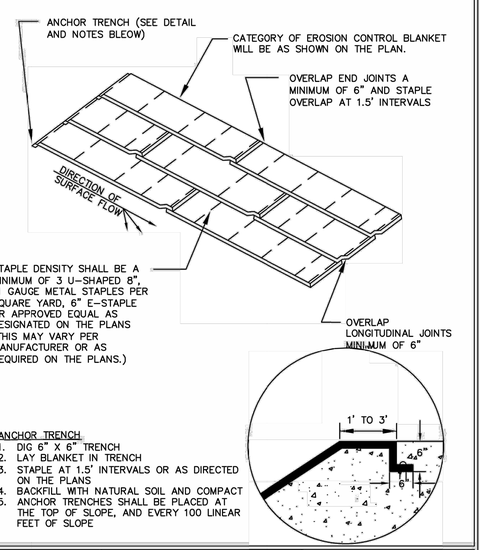


ANCHOR TRENCH
1. DIG 6" X 6" TRENCH
2. LAY BLANKET IN TRENCH
3. STAPLE AT 1.5' INTERVALS OR AS DIRECTED ON THE PLANS
4. BACKFILL WITH NATURAL SOIL AND COMPACT
5. ANCHOR TRENCHES SHALL BE PLACED AT THE TOP OF SLOPE, AND EVERY 100 LINEAR FEET OF SLOPE

| | | |
|---|---|---|
| NORTH BRANCH | CITY OF NORTH BRANCH<br>EROSION CONTROL BLANKET<br>NO SCALE | 2025 - STANDARD DETAIL<br>DETAIL NO.<br>ERO-006 |

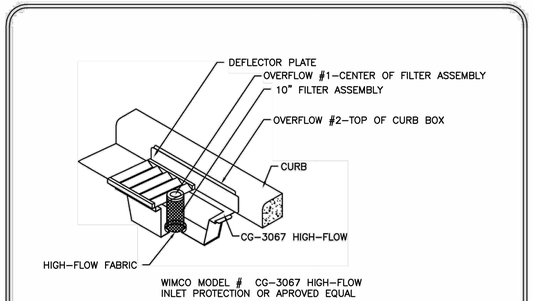


CURB AND GUTTER INLET PROTECTION
NO SCALE

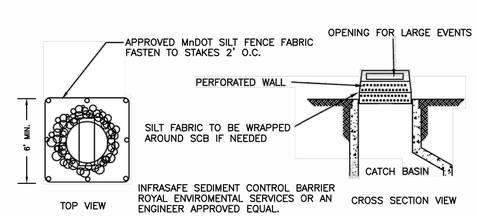


INFRASAFE SEDIMENT CONTROL BARRIER
ROYAL ENVIROMENTAL SERVICES OR AN ENGINEER APPROVED EQUAL.

REAR YARD INLET PROTECTION
NO SCALE

| | | |
|---|---|---|
| NORTH BRANCH | CITY OF NORTH BRANCH<br>STORM SEWER INLET PROTECTION<br>NO SCALE | 2025 - STANDARD DETAIL<br>DETAIL NO.<br>ERO-003 |

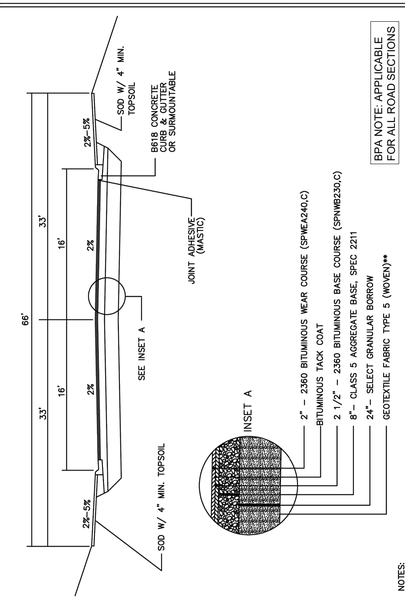


NOTES:
1. DESIGN MAY CHANGE UPON REVIEW OF THE SOIL CONDITIONS.
2. NO STREET CUTS ARE ALLOWS AFTER NOVEMBER 1. STREET CUT PERMIT IS VALID FOR 30 DAYS.
3. PAVEMENT SHALL BE LAID TO MINIMIZE SEAMS. PAVER SCREED SHALL BE 16' WIDE.

**WHERE UNSUITABLE MATERIALS EXIST, AS DIRECTED BY THE ENGINEER

| | | |
|---|---|---|
| NORTH BRANCH | CITY OF NORTH BRANCH<br>TYPICAL RESIDENTIAL URBAN STREET<br>NO SCALE | 2025 STANDARD DETAIL<br>DETAIL NO.<br>RDW - 001 |

| REV NO. | DATE | DESCRIPTION |
|---|---|---|
| 1 | 04/01/2025 | REVISION PER CITY REVIEW |
| 2 | 04/24/2025 | REVISION PER CITY REVIEW |
| 3 | 05/29/2025 | REVISION PER CITY & COUNTY REVIEW |

DATE: 05/29/2025
DESIGN BY: M.J.M
DRAWN BY: M.J.M
CHECKED BY: C.J.D
DWG FILE: DETAILS
FILE NO.: 22-0030.00

I hereby certify that this plan, specification, or report was prepared by me or under my direct supervision and that I am a duly Licensed Professional Engineer under the laws of the State of Minnesota.

Signed: Christopher J. Dahn
Date: Lic. No. 58628

NOT FOR CONSTRUCTION


BOGART, PEDERSON & ASSOCIATES, INC.
LAND SURVEYING
CIVIL ENGINEERING
ENVIRONMENTAL SERVICES
13076 FIRST STREET, BECKER, MN 55308-9322
TEL: 763-262-9622 FAX: 763-262-9644


CEDAR RIDGE COMMUNITY LLC
CEDAR RIDGE COMMUNITY
City of North Branch, Chisago County, MN

DETAILS

SHEET NO.
C9.1

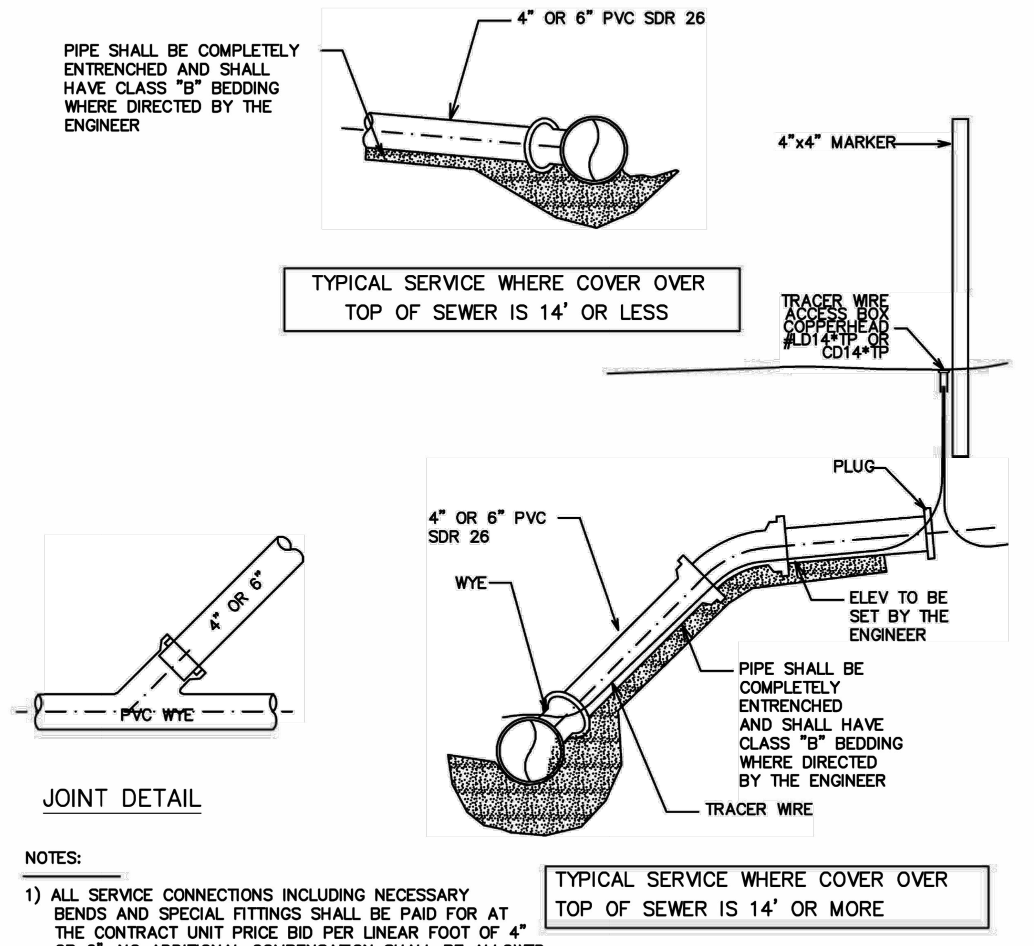


NOTES:

1) ALL SERVICE CONNECTIONS INCLUDING NECESSARY BENDS AND SPECIAL FITTINGS SHALL BE PAID FOR AT THE CONTRACT UNIT PRICE BID PER LINEAR FOOT OF 4" OR 6". NO ADDITIONAL COMPENSATION SHALL BE ALLOWED FOR CONCRETE ENCASEMENT OR PIPE BEDDING.
2) ALL SERVICE CONNECTIONS SHALL TERMINATE 10' INSIDE PROPERTY LINE. UNLESS OTHERWISE APPROVED BY THE ENGINEER.
3) SERVICE STUB SHALL BE PLUGGED AND MARKED WITH A 4" x 4" TIMBER PROTRUDING 3' OUT OF GROUND. (PAINTED GREEN)
4) NO SADDLES WILL BE ALLOWED
5) RETRO-FIT INSTALLATIONS TO BE CONSTRUCTED BY CUTTING IN A PVC WYE AND PVC SLEEVE
6) SEWER SERVICES ARE TO BE LOCATED 3' DOWNSTREAM OF WATER SERVICE IF IN THE SAME TRENCH

CITY OF NORTH BRANCH | 2025 - STANDARD DETAIL
SANITARY SEWER SERVICE DETAIL
NO SCALE
DETAIL NO. SAN-001

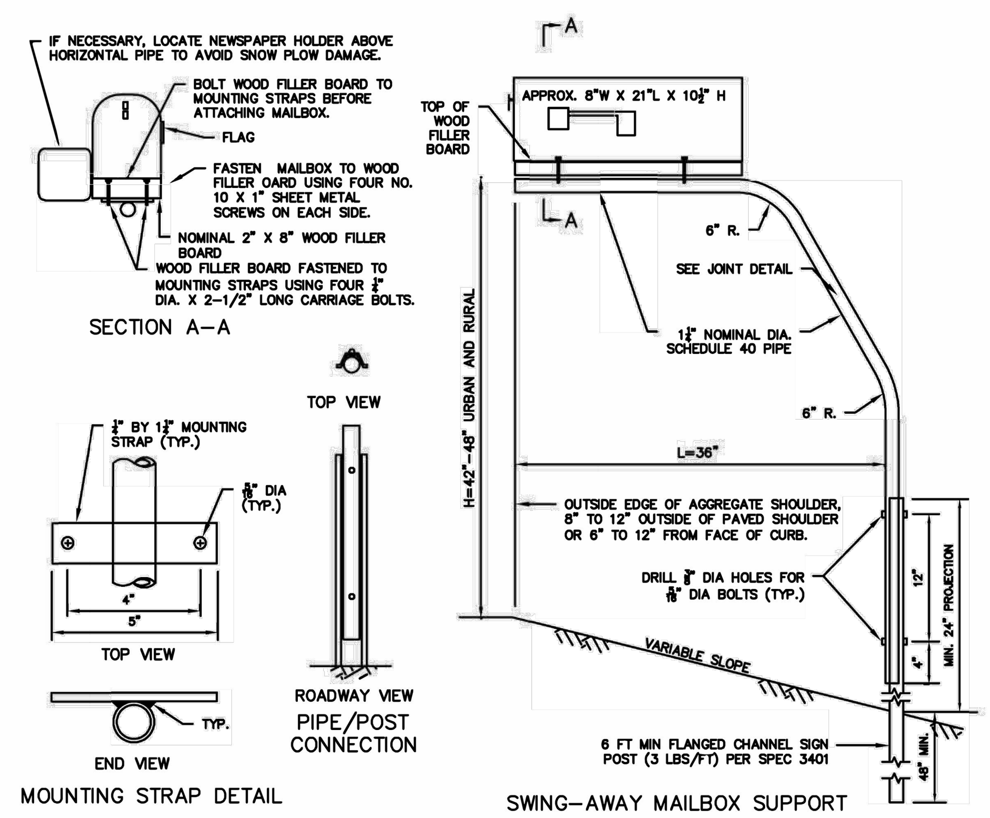


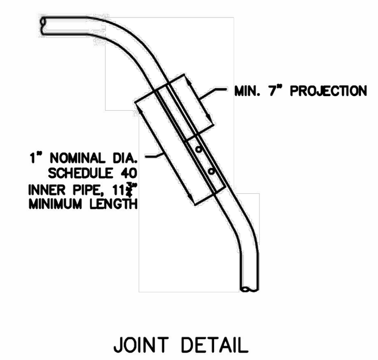


NOTES:

MAILBOX LOCATIONS SHOW BE STAKED BEFORE INSTALLATION FOR PROPER HEIGHT AND DISTANCE FROM ROADWAY. ONCE STAKED, THE INSTALLER MUST NOTIFY THE ENGINEER AND THE POST OFFICE. THE ENGINEER AND THE POSTMASTER SHALL APPROVE THE STAKED LOCATIONS PRIOR TO FINAL INSTALLATION.

THE MINIMUM SPACING (CENTER TO CENTER) BETWEEN MULTIPLE SUPPORTS SHALL BE EQUAL TO THE HEIGHT OF THE MAILBOX SUPPORT.

CITY OF NORTH BRANCH | 2025 - STANDARD DETAIL
MAIL BOX INSTALLATION DETAIL
NO SCALE
DETAIL NO. RDW - 013

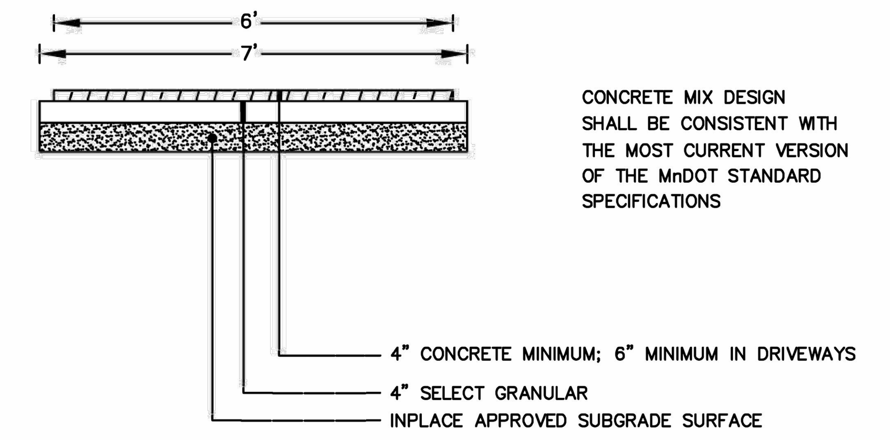


CONCRETE MIX DESIGN SHALL BE CONSISTENT WITH THE MOST CURRENT VERSION OF THE MnDOT STANDARD SPECIFICATIONS

6' WIDE CONCRETE WALK TYPICAL SECTION

CITY OF NORTH BRANCH | 2025 - STANDARD DETAIL
TYPICAL CONCRETE WALK
NO SCALE
DETAIL NO. RDW - 012

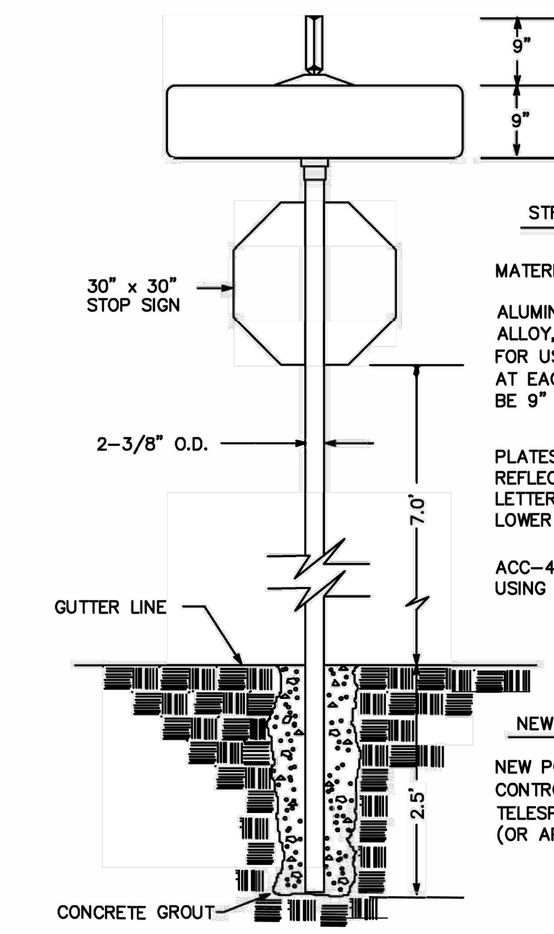


STREET SIGN SPECIFICATIONS

MATERIAL:

ALUMINUM BLANKS SHALL BE CONSTRUCTED OF 5052-H38 ALLOY, HAVE A GAUGE OF .080, BE NOTCHED FOR USE WITH ACC-4 BRACKETS, HAVE HOLES PUNCHED AT EACH END FOR BOLTING TOGETHER AND BE 9" AS REQUIRED.

PLATES SHALL BE COVERED WITH HIGH INTENSITY REFLECTIVE SHEETING, SCREENED GREEN WITH MARGIN. LETTERING SHALL BE 6" SERIES C, ALL U.C. LOWER CASE LETTERING SHALL BE 4"

ACC-4 BRACKETS ARE TO BE ALUMINUM DESIGNED FOR USING 9" PLATES AS REQUIRED.

NEW POSTS SPECIFICATIONS

NEW POSTS USED FOR MOUNTING STREET NAME/TRAFFIC CONTROL SIGNS, SHALL VARY IN LENGTH, SHALL BE TELESPAR 2"X2"X14 GAUGE OR 3LB GALVANIZED CHANNEL (OR APPROVED EQUAL)

| NAME | ABBREVIATION |
|---|---|
| AVENUE | Ave |
| BOULEVARD | Blvd |
| CIRCLE | Cir |
| COURT | Ct |
| DRIVE | Dr |
| EAST | E |
| PARKWAY | Pkwy |
| PLACE | Pl |
| STREET | St |
| TERRACE | Ter |
| TRAIL | Trl |
| WEST | W |

CITY OF NORTH BRANCH | 2025 - STANDARD DETAIL
TYPICAL STREET SIGN
NO SCALE
DETAIL NO. RDW - 010

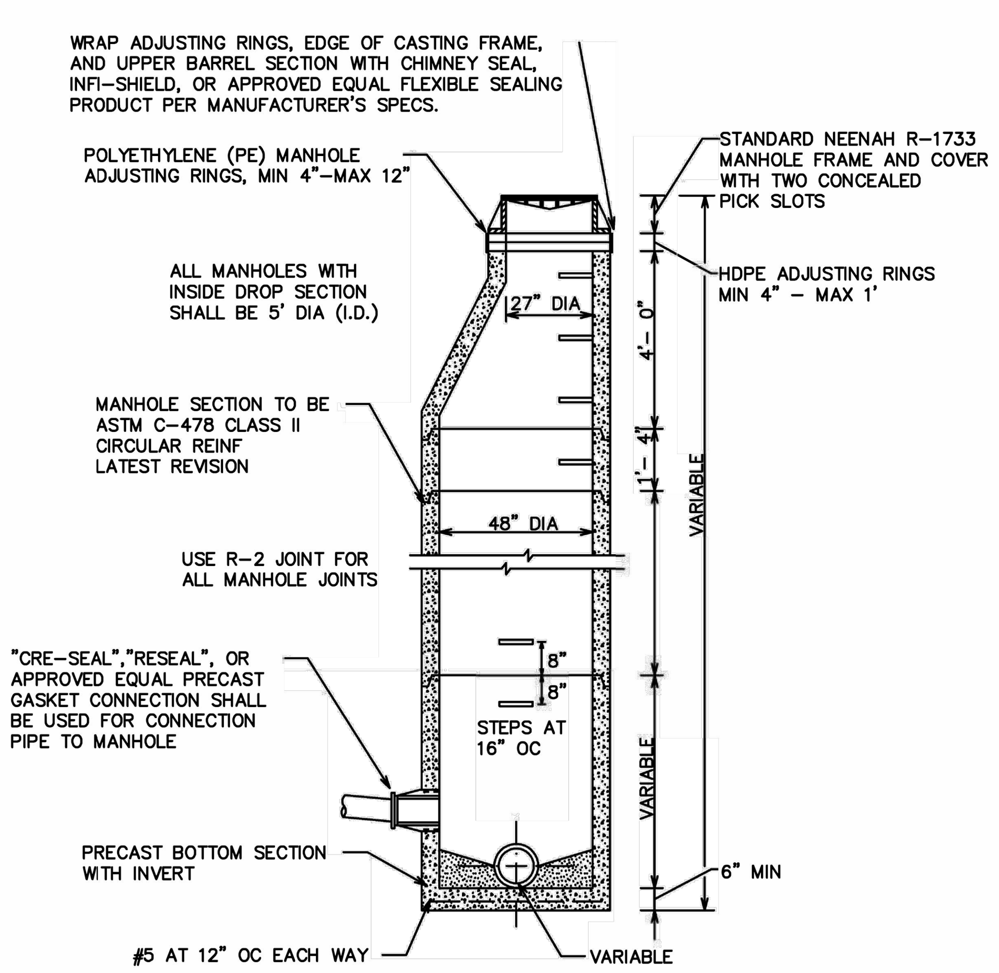


NOTES:

1. MANHOLE STEPS SHALL BE CAST IRON OR MA MODEL PS-I-PF (BY MA INDUSTRIAL INC.) CONFORMING TO ALL OSHA REGULATIONS AND SPACED 16" OC.
2. ALL MANHOLE JOINTS SHALL BE SEAL WRAPPED AS DESCRIBED IN THE SPECIFICATION (INCIDENTAL).

CITY OF NORTH BRANCH | 2025 - STANDARD DETAIL
STANDARD MANHOLE FOR SANITARY SEWER
NO SCALE
DETAIL NO. SAN-002

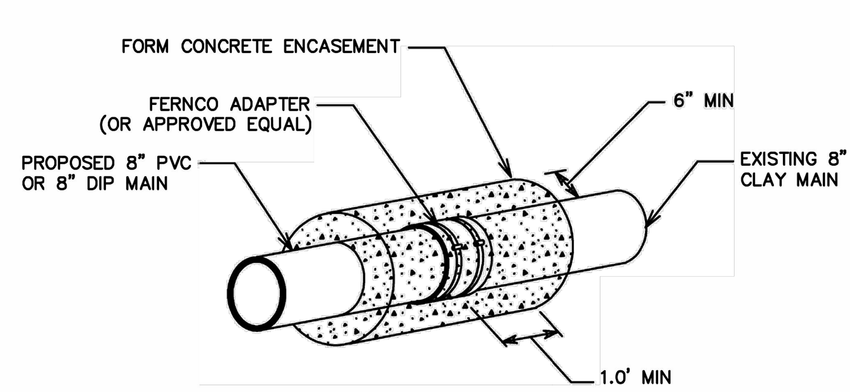


FOR 8" PVC = FERNCO #1002-88 OR EQUAL
FOR 8" DIP = FERNCO # 1003-85 OR EQUAL

NOTES:
1) ALL FERNCO ADAPTORS USED MUST BE MADE FOR CLAY TO PVC TRANSITIONS
2) FOR ABANDONED SEWER/WATER LINES, SEWER LINES SHALL BE REMOVED TO THE MAIN AND CAPPED AT WYE. WATERMAIN SERVICES SHALL BE REMOVED TO THE MAIN WITH THE CORPORATION STOP REMOVED AND CAPPED WITH A BRASS PLUG.

CITY OF NORTH BRANCH | 2025 - STANDARD DETAIL
SANITARY SEWER MAIN TO CLAY PIPE CONNECTION DETAIL
NO SCALE
DETAIL NO. SAN - 003

NOTE:
1. FRAME AND SOLID COVER TO BE NEENAH NO. R-1733 WITH NO.MF 25572 CONCEALED PICKHOLE OR APPROVED EQUAL.
2. USE NEENAH R-1755G FOR WATERTIGHT APPLICATIONS.

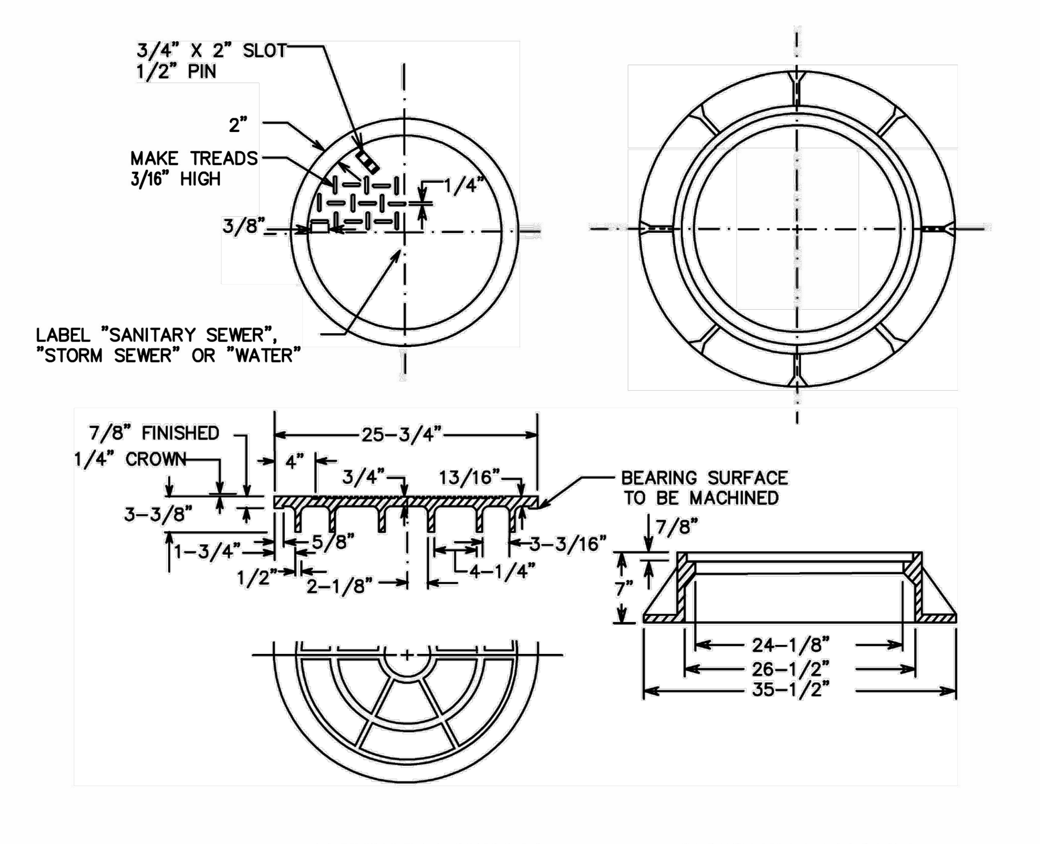


CITY OF NORTH BRANCH | 2025 - STANDARD DETAIL
STANDARD SANITARY & STORM SEWER FRAME & COVER FOR MANHOLE
NO SCALE
DETAIL NO. SAN-004

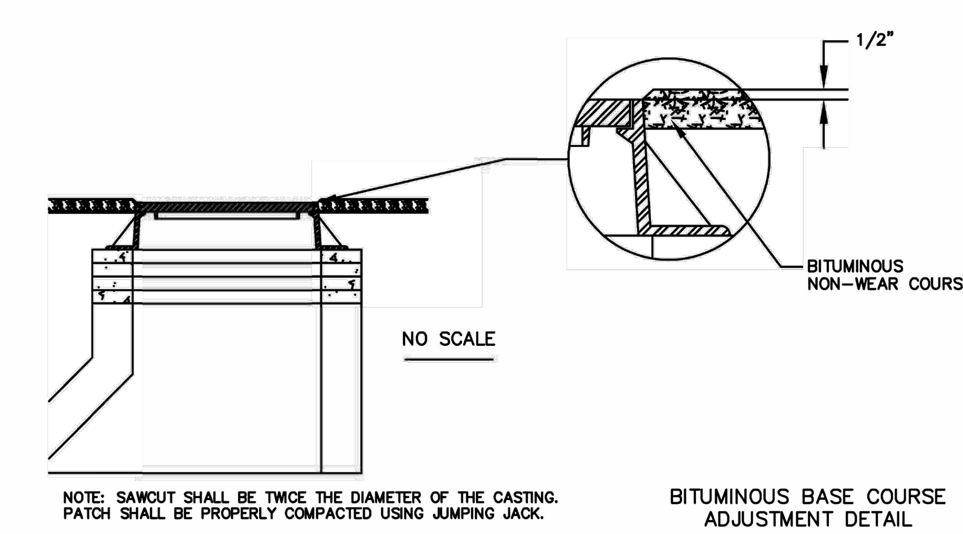


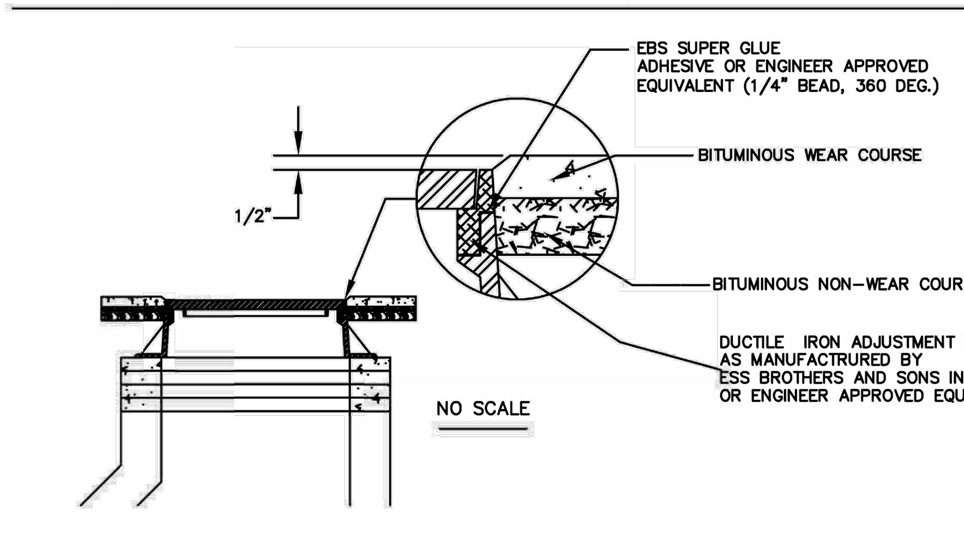


NOTES:
1. THE HEIGHT OF THE DUCTILE IRON ADJUSTMENT RING IS DETERMINED BY THE THICKNESS OF THE OVERLAY.
2. DUCTILE IRON ADJUSTMENT RINGS TO BE INSTALLED AS PER MANUFACTURE'S RECOMENDATION.
3. 2- PIECE AND CAST IRON ADJUSTMENT RINGS ARE NOT ALLOWED

BITUMINOUS WEAR COURSE ADJUSTMENT DETAIL

CITY OF NORTH BRANCH | 2025 - STANDARD DETAIL
CASTING ADJUSTMENT FOR SANITARY AND STORM SEWER
NO SCALE
DETAIL NO. SAN-005

| REV NO. | DATE | DESCRIPTION |
|---|---|---|
| 1 | 04/01/2025 | REVISION PER CITY REVIEW |
| 2 | 04/24/2025 | REVISION PER CITY REVIEW |
| 3 | 05/29/2025 | REVISION PER CITY & COUNTY REVIEW |

DATE: 05/29/2025
DESIGN BY: MJM
DRAWN BY: MJM
CHECKED BY: CJD
DWG FILE: DETAILS
FILE NO.: 22-0030.00

I hereby certify that this plan, specification, or report was prepared by me or under my direct supervision and that I am a duly Licensed Professional Engineer under the laws of the State of Minnesota.

NOT FOR CONSTRUCTION

Signed: Christopher J. Dahn
Date: Lic. No. 58628

BOGART, PEDERSON & ASSOCIATES, INC.
LAND SURVEYING
CIVIL ENGINEERING
ENVIRONMENTAL SERVICES
13076 FIRST STREET, BECKER, MN 55308-9322
TEL: 763-262-8822 FAX: 763-262-8844

CEDAR RIDGE COMMUNITY LLC
CEDAR RIDGE COMMUNITY
City of North Branch, Chisago County, MN

DETAILS

SHEET NO.
C9.2

5/29/2025 5:33 PM N:\Projects Current\22-0030.02 Betzler North Branch Plat\Civil\CAD Files\NB CoverSWPPP.dwg

5/29/2025 5:33 PM N:\Projects Current\22-0030.02 Betzler North Branch Plat\Civil\CAD Files\NB CoverSWPPP.dwg

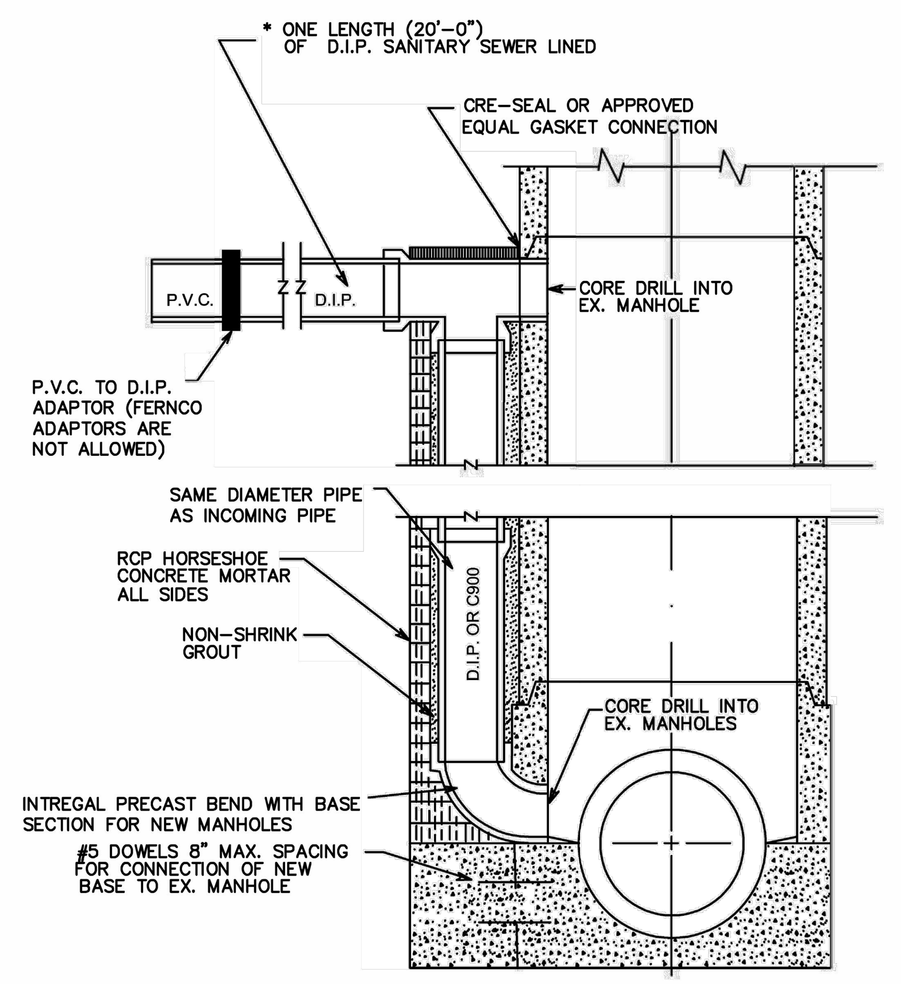


CITY OF NORTH BRANCH

OUTSIDE DROP SECTION FOR SANITARY SEWER

NO SCALE

2025 - STANDARD DETAIL

DETAIL NO. SAN-007

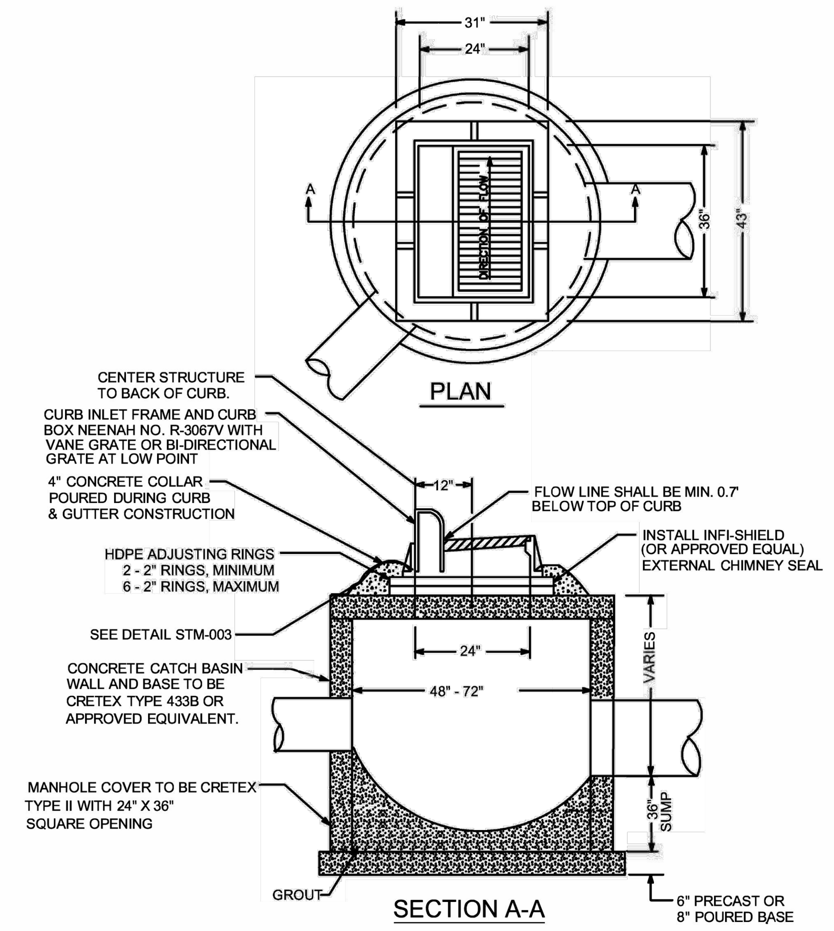


NOTES:
1. REINFORCING TO CONSIST OF #4 BARS @ 8" O.C. BOTH WAYS
2. MANHOLE STEPS SHALL BE CAST ALUMINUM OR MA INDUSTRY WITH VINYL COATING OR APPROVED EQUIVALENT AND SHALL BE LOCATED @ 16" O.C. PARALLEL WITH THE CURB
3. GROUT BOTTOM TO DRAIN TO CENTER
4. PIPE CUT-OUTS TO BE LOCATED WHERE REQUIRED
5. ADJUSTING RINGS SHALL BE HDPE INSTALLED ACCORDING TO MANUFACTURERS' REQUIREMENTS.
6. WIMCO OR APPROVED EQUAL INLET PROTECTION SHALL BE MAINTAINED AND KEPT IN GOOD SHAPE UNTIL WEAR COURSE IS PAVED
7. SURMOUNTABLE CURB DRIVE OVER CASTING - NEENAH 3501-TB
8. B-618 CURB DRIVE OVER CASTING - NEENAH 3290A

CITY OF NORTH BRANCH

STANDARD STORM SEWER CATCH BASIN MANHOLE

NO SCALE

2025 - STANDARD DETAIL

DETAIL NO. STM-002

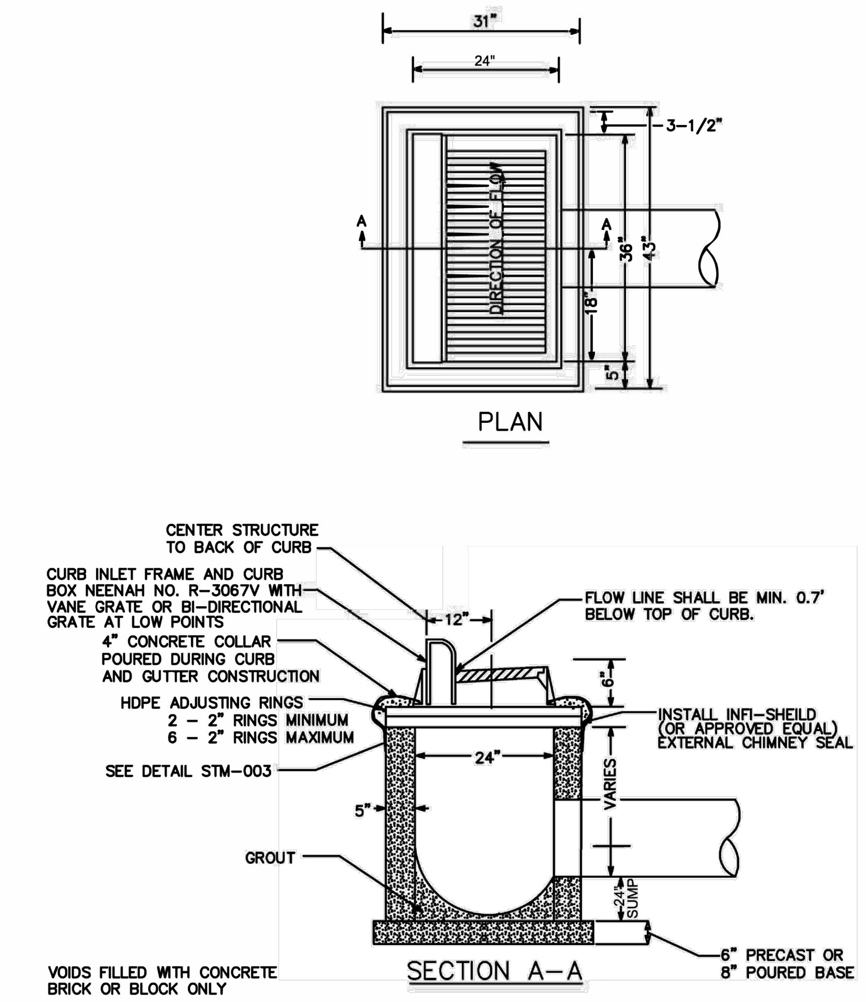


NOTES:
1. REINFORCING TO CONSIST OF #4 BARS @ 8" O.C. BOTH WAYS
2. GROUT BOTTOM TO DRAIN TO CENTER
3. PIPE CUT-OUTS TO BE LOCATED WHERE REQUIRED
4. ADJUSTING RINGS SHALL BE HDPE AND INSTALLED ACCORDING TO MANUFACTURERS' REQUIREMENTS.
5. WIMCO OR APPROVED EQUAL INLET PROTECTION SHALL BE MAINTAINED AND KEPT IN GOOD SHAPE UNTIL WEAR COURSE IS PAVED
6. SURMOUNTABLE CURB DRIVE OVER CASTING - NEENAH 3501-TB
7. B-618 CURB DRIVE OVER CASTING - NEENAH 3290A

CITY OF NORTH BRANCH

STANDARD STORM SEWER MANHOLE, MNDOT 4020 MANHOLE

NO SCALE

2025 - STANDARD DETAIL

DETAIL NO. STM-001

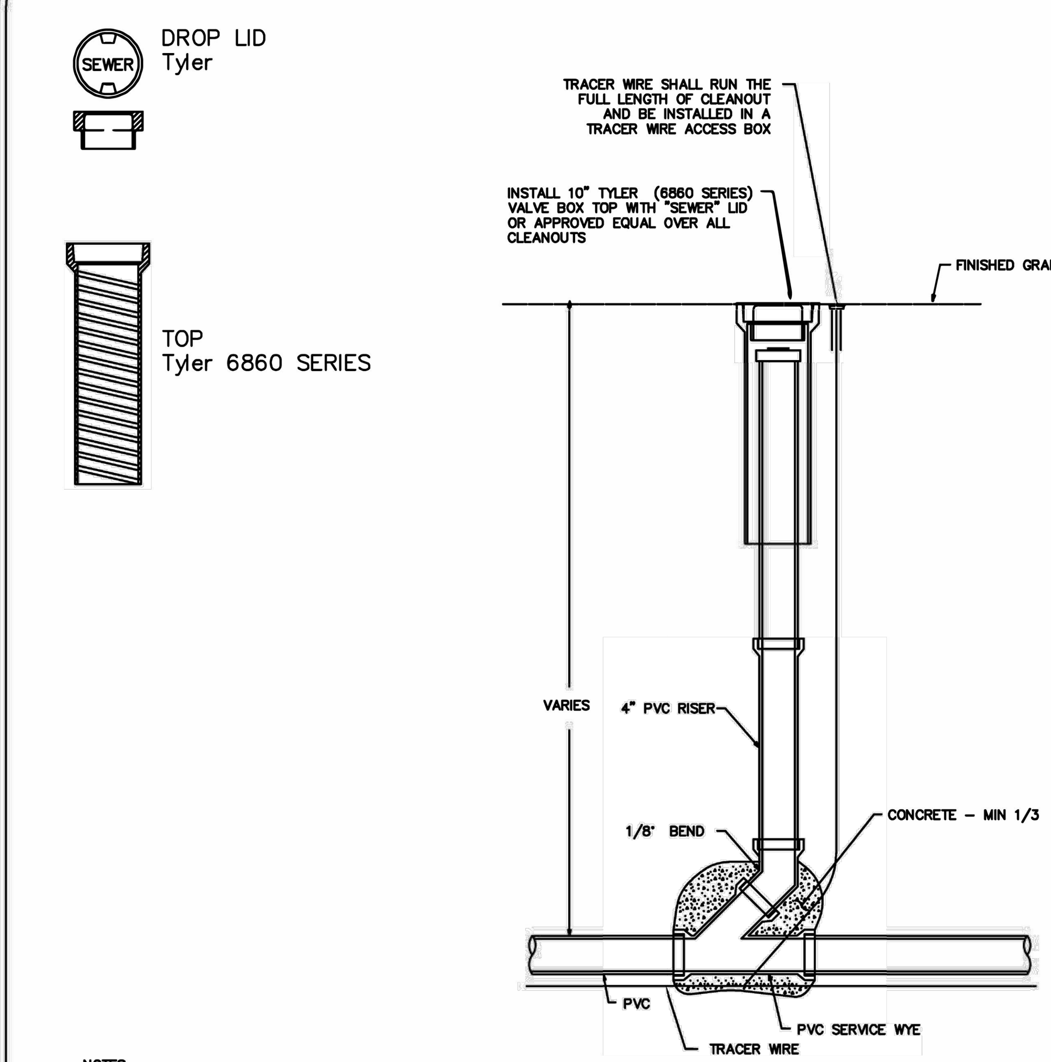


NOTES:
1. TRACER WIRE ACCESS BOX FOR NON-ROADWAY APPLICATIONS SHALL BE GRADE LEVEL COPPERHEAD LITE DUTY #LD14*TP.
2. TRACER WIRE ACCESS BOX FOR CONCRETE/DRIVEWAY APPLICATIONS SHALL BE COPPERHEAD #CD14*TP.
3. CLEANOUTS LOCATED IN DRIVEWAYS SHALL BE COVERED WITH A FORD A-1 METER BOX COVER.

CITY OF NORTH BRANCH

SANITARY SEWER SERVICE CLEANOUT

NO SCALE

2025 - STANDARD DETAIL

DETAIL NO. SAN - 008

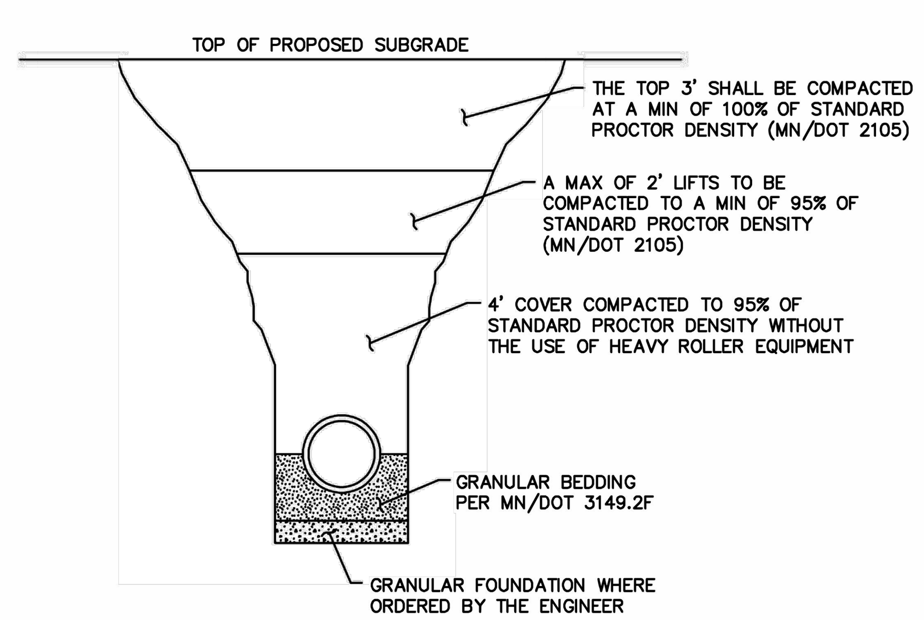


SHOVEL, PLACE, AND HAND COMPACT AROUND PIPE TO 12" ABOVE PIPE. VIBRATORY COMPACTION REQUIRED EACH SIDE OF PIPE, AS DIRECTED BY THE ENGINEER.

CITY OF NORTH BRANCH

TYPICAL TRENCH COMPACTING AND CLASS B BEDDING

NO SCALE

2025 - STANDARD DETAIL

DETAIL NO. SAN-006

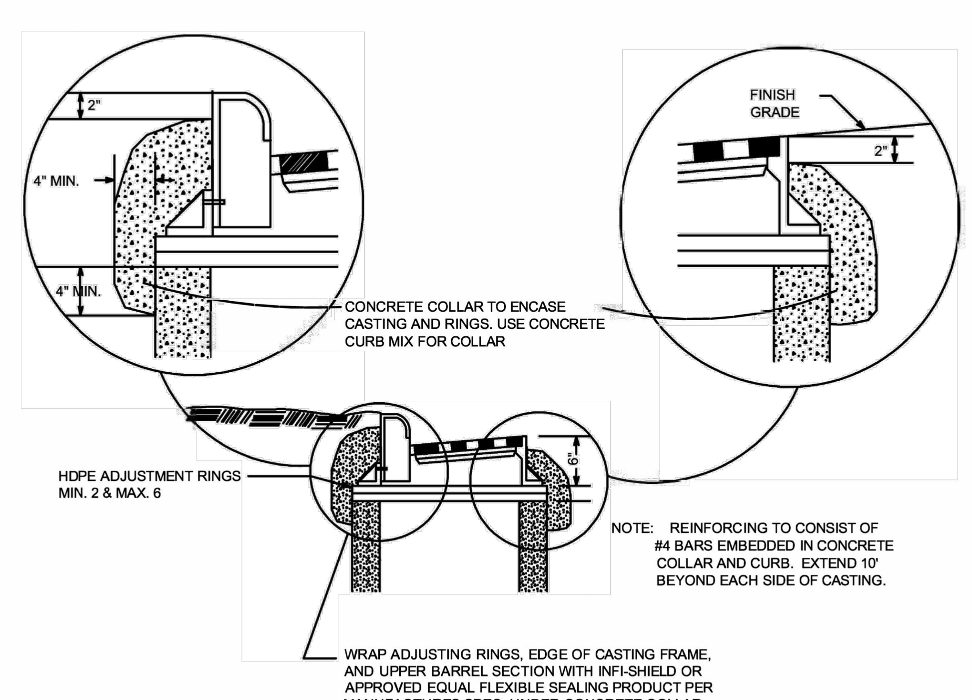


NOTE: REINFORCING TO CONSIST OF #4 BARS EMBEDDED IN CONCRETE COLLAR AND CURB. EXTEND 10' BEYOND EACH SIDE OF CASTING.

CITY OF NORTH BRANCH

CONCRETE COLLAR FOR CATCH BASIN CASTING

NO SCALE

2025 - STANDARD DETAIL

DETAIL NO. STM-003

See City Detail No. STM-007 for riprap placement.

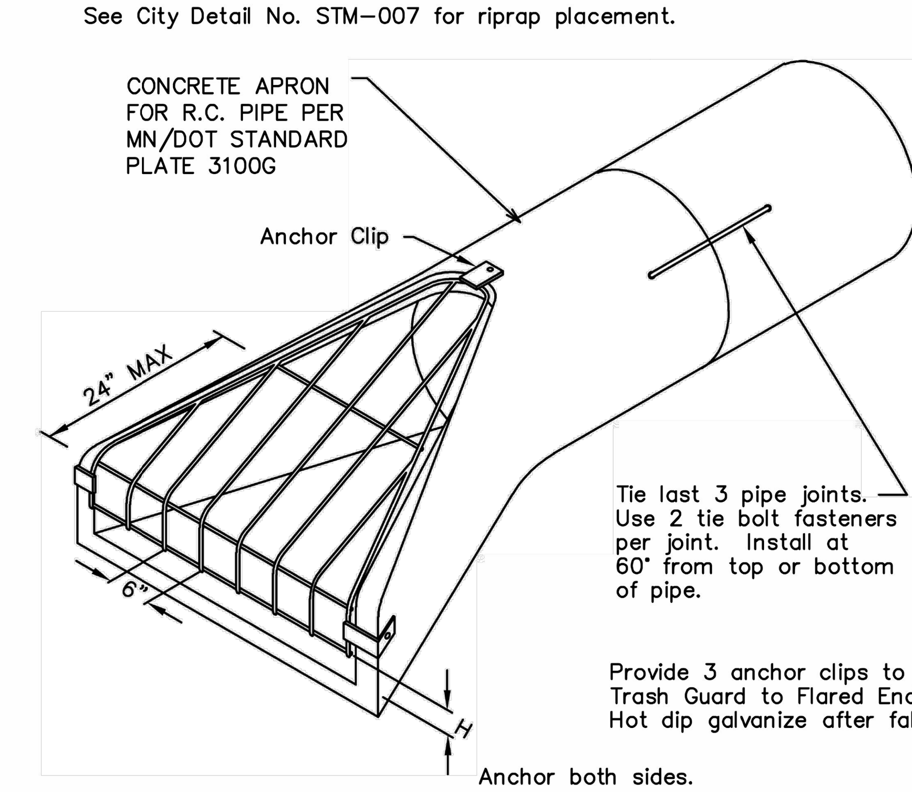


TRASH GUARD SIZING

| Pipe Size | Bars | 'H' | Bolts |
|---|---|---|---|
| 12"–18" | 3/4"0 | 4" | 5/8" |
| 21"–42" | 1"0 | 6" | 3/4" |
| 48"–72" | 1 1/4"0 | 12" | 1" |

NOTES:
1. Entire Trash Guard assembly to be HOT-DIP galvanized after fabrication.
2. Size of Trash Guard variable dependent on size of Flared End Section.
3. Trash Guards required on all Aprons 21" and larger unless otherwise noted.
4. Galvanized metal apron per MN/DOT standard plate 3129A to be used with HDPE pipe in green areas.
5. Install 7 foot 3lb galvanized post with 360 degree reflector (X4-13) at all flared end sections.

CITY OF NORTH BRANCH

FLARED END SECTIONS AND TRASH GUARD DETAIL

NO SCALE

2025 - STANDARD DETAIL

DETAIL NO. STM-005

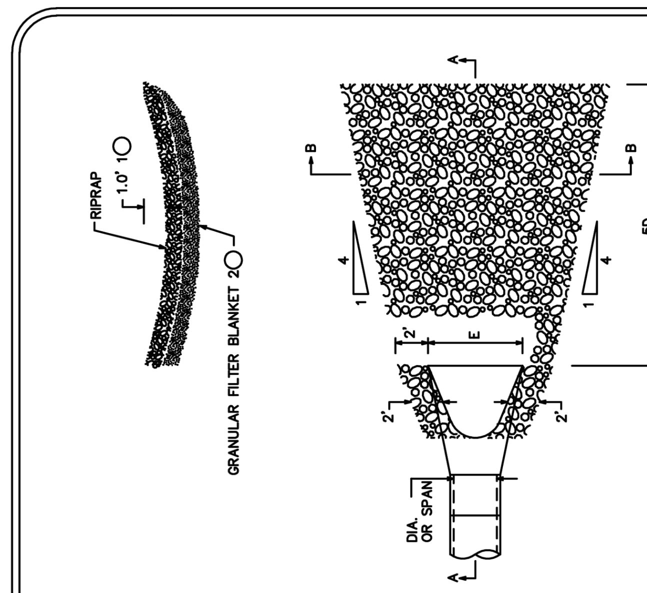


① FOR PIPES GREATER THAN OR EQUAL TO 48", USE 2.0'
② THE CONTRACTOR, AT HIS OPTION, MAY SUBSTITUTE A GEOTEXTILE FABRIC, SPEC 3601 FOR THE GRANULAR FILTER BLANKET UNLESS OTHERWISE SPECIFIED IN THE PLANS. THE FABRIC SHOULD COVER THE AREA OF THE RIPRAP AND EXTEND UNDER THE CULVERT APRON 3 FEET.

| DIA ROUND PIPE (IN) | CLASS III $D_{50}$ = 9" 15" DEPTH RIPRAP (CU YD) | CLASS III 7.5" DEPTH GRANULAR FILTER (CU YD) | CLASS IV $D_{50}$ = 12" 18" DEPTH RIPRAP (CU YD) | CLASS IV 9" DEPTH GRANULAR FILTER (CU YD) | CLASS V $D_{50}$ = 15" 24" DEPTH RIPRAP (CU YD) | CLASS V 12" DEPTH GRANULAR FILTER (CU YD) |
|---|---|---|---|---|---|---|
| 12 | 2.1 | 1.1 | 2.6 | 1.3 | 3.4 | 1.7 |
| 15 | 2.9 | 1.4 | 3.5 | 1.7 | 4.6 | 2.3 |
| 18 | 3.6 | 1.8 | 4.4 | 2.2 | 5.8 | 2.9 |
| 21 | 4.6 | 2.3 | 5.6 | 2.8 | 7.4 | 3.7 |
| 24 | 5.8 | 2.9 | 6.9 | 3.5 | 9.2 | 4.6 |
| 27 | 6.9 | 3.4 | 8.3 | 4.1 | 11.0 | 5.5 |
| 30 | 8.3 | 4.1 | 9.9 | 5.0 | 13.2 | 6.6 |
| 36 | 11.0 | 5.5 | 13.2 | 6.6 | 17.6 | 8.8 |
| 42 | 13.6 | 6.8 | 16.4 | 8.2 | 21.8 | 10.9 |
| 48 | 16.8 | 8.4 | 20.1 | 10.1 | 26.8 | 13.4 |
| 54 | 19.8 | 9.9 | 23.7 | 11.9 | 31.6 | 15.8 |
| 60 | 23.0 | 11.5 | 27.6 | 13.8 | 36.8 | 18.4 |
| 66 | 27.0 | 13.5 | 32.4 | 16.2 | 43.2 | 21.6 |
| 72 | 31.1 | 15.6 | 37.4 | 18.7 | 49.8 | 24.9 |
| 84 | 40.0 | 20.0 | 48.0 | 24.0 | 64.0 | 32.0 |
| 90 | 45.5 | 22.8 | 54.6 | 27.3 | 72.8 | 36.4 |

| SPAN ROUND PIPE (IN) | CLASS III $D_{50}$ = 9" 15" DEPTH RIPRAP (CU YD) | CLASS III 7.5" DEPTH GRANULAR FILTER (CU YD) | CLASS IV $D_{50}$ = 12" 18" DEPTH RIPRAP (CU YD) | CLASS IV 9" DEPTH GRANULAR FILTER (CU YD) | CLASS V $D_{50}$ = 15" 24" DEPTH RIPRAP (CU YD) | CLASS V 12" DEPTH GRANULAR FILTER (CU YD) |
|---|---|---|---|---|---|---|
| 22 | 3.6 | 1.8 | 4.4 | 2.2 | 5.8 | 2.9 |
| 28 | 5.8 | 2.9 | 6.9 | 3.5 | 9.2 | 4.6 |
| 36 | 8.1 | 4.1 | 9.8 | 4.9 | 13.0 | 6.5 |
| 43 | 11.0 | 5.5 | 13.2 | 6.6 | 17.6 | 8.8 |
| 51 | 13.6 | 6.8 | 16.4 | 8.2 | 21.8 | 10.9 |
| 58 | 16.5 | 8.3 | 19.8 | 9.9 | 26.4 | 13.2 |
| 65 | 19.8 | 9.9 | 23.7 | 11.9 | 31.6 | 15.8 |
| 73 | 23.3 | 11.6 | 27.9 | 14.0 | 37.2 | 18.6 |
| 88 | 32.4 | 16.2 | 38.9 | 19.4 | 51.8 | 25.9 |
| 102 | 43.5 | 21.8 | 52.2 | 26.1 | 69.6 | 34.8 |
| 115 | 44.0 | 22.0 | 52.8 | 26.4 | 70.4 | 35.2 |
| 122 | 49.3 | 24.6 | 59.1 | 29.6 | 78.8 | 39.4 |
| 138 | 61.3 | 30.6 | 73.5 | 36.8 | 98.0 | 49.0 |
| 154 | 74.4 | 37.2 | 89.3 | 44.6 | 119.0 | 59.5 |

NOTE: REQUIREMENTS FOR RIPRAP SIZE, THICKNESS, AND FILTER BLANKET WILL BE DESIGNATED IN PLANS.

CITY OF NORTH BRANCH

HAND PLACED RIP RAP AT RCP OUTLETS

NO SCALE

2025 - STANDARD DETAIL

DETAIL NO. STM-007

| REV NO. | DATE | DESCRIPTION |
|---|---|---|
| 1 | 04/01/2025 | REVISION PER CITY REVIEW |
| 2 | 04/24/2025 | REVISION PER CITY REVIEW |
| 3 | 05/29/2025 | REVISION PER CITY & COUNTY REVIEW |

DATE: 05/29/2025
DESIGN BY: MJM
DRAWN BY: MJM
CHECKED BY: CJD
DWG FILE: DETAILS
FILE NO.: 22-0030.00

I hereby certify that this plan, specification, or report was prepared by me or under my direct supervision and that I am a duly Licensed Professional Engineer under the laws of the State of Minnesota.

NOT FOR CONSTRUCTION

Signed: Christopher J. Dahn

Date: Lic. No. 58628


BOGART, PEDERSON & ASSOCIATES, INC.
LAND SURVEYING
CIVIL ENGINEERING
ENVIRONMENTAL SERVICES
13076 FIRST STREET, BECKER, MN 55308-9322
TEL: 763-262-8822 FAX: 763-262-8844


CEDAR RIDGE COMMUNITY LLC
CEDAR RIDGE COMMUNITY
City of North Branch, Chisago County, MN

DETAILS

SHEET NO.

C9.3

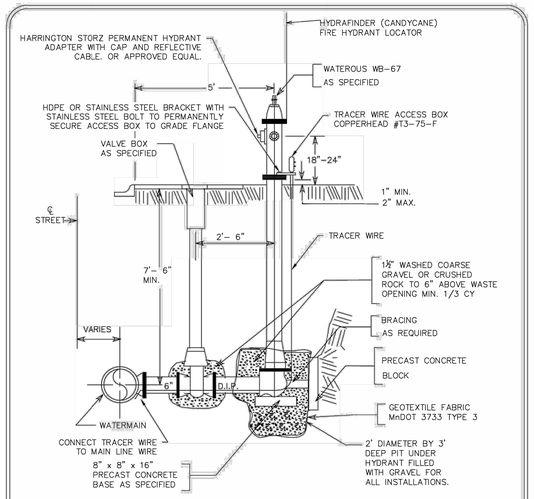


NOTE:
ALL HYDRANT LEADS SHALL BE TIED WITH ¾" GALVANIZED STEEL TIE RODS, EXTENDING FROM TEE TO VALVE AND FROM VALVE TO HYDRANT OR MEGA-LUG BRAND THRUST RETAINER GLANDS AT JOINTS (INCIDENTAL).

| | | |
|---|---|---|
| CITY OF NORTH BRANCH EST. 1881 | CITY OF NORTH BRANCH<br>TYPICAL HYDRANT ASSEMBLY INSTALLATION<br>NO SCALE | 2025 - STANDARD DETAIL<br>DETAIL NO.<br>WM-001 |

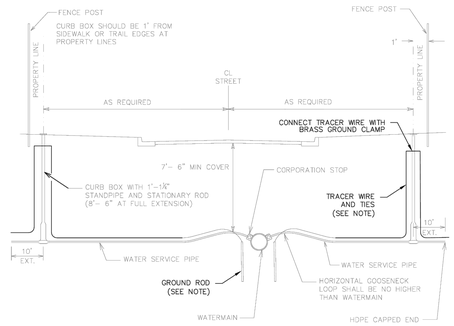


NOTES:
1. CURB BOXES INSTALLED IN AREAS WHERE BOULEVARD IS TO BE CUT AT A LATER DATE SHALL BE INSTALLED AT DEPTH REQUIRED, CURB BOX EXTENTION FOR BOXES EXCEEDING 7.5' IN LENGTH ARE TO BE BID AT CONTRACT PRICE AND SHALL INCLUDE STACK COUPLINGS, CONNECTIONS, ETC.
2. CURB BOX LOCATIONS SHALL BE MARKED WITH A STEEL FENCE POST PAINTED BLUE.
3. WATER SERVICE SHALL BE INSTALLED WITH A HORIZONTAL SEPARATION OF THREE FEET (3') FROM THE SANITARY SEWER SERVICE AND SHALL BE INSTALLED UPSTREAM OF THE SANITARY SEWER SERVICE.
4. CURB BOXES LOCATED IN A DRIVEWAY OR PARKING LOT SHALL BE COVERED WITH A FORD A-1 METER BOX COVER OR ENGINEER APPROVED EQUAL.
5. HDPE WATER SERVICES – INSTALL MAGNESIUM GROUNDING ANODE ROD, LOCATING WIRE, WIRE CONNECTORS, AND TIES PER SPECIFICATIONS.

| | | |
|---|---|---|
| CITY OF NORTH BRANCH EST. 1881 | CITY OF NORTH BRANCH<br>TYPICAL WATER SERVICE<br>NO SCALE | 2025 - STANDARD DETAIL<br>DETAIL NO.<br>WM-002 |

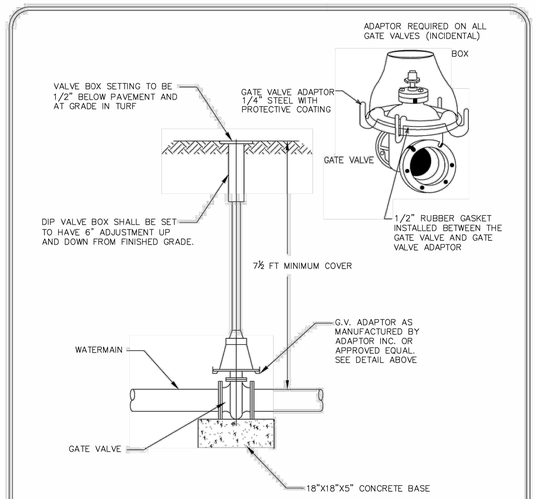


NOTES:
1. VALVE BOX INSERTS ARE NOT ALLOWED UNLESS APPROVED BY THE ENGINEER.
2. VALVE BOXES SHALL BE INSTALLED PLUMB AND SHALL ALLOW A 4" P.V.C. PIPE TO PASS ENTIRELY OVER THE GATE VALVE NUT AFTER INSTALLATION IS COMPLETE.
3. ALL VALVES SHALL BE TIED WITH 3/4" THREADED TIE RODS TO THE MAIN. MEGA LUGS MAY BE USED IN LIEU OF TIE RODS.
4. THE INITIAL & FINAL RAISING OF VALVE BOXES SHALL BE CONSIDERED INCIDENTAL TO THE PROJECT.
5. ROCK BEDDING FOR DRAINAGE SHALL BE INSTALLED AT GATE VALVE, AS DIRECTED BY THE ENGINEER.

| | | |
|---|---|---|
| CITY OF NORTH BRANCH EST. 1881 | CITY OF NORTH BRANCH<br>VALVE BOX INSTALLATION<br>NO SCALE | 2025 - STANDARD DETAIL<br>DETAIL NO.<br>WM-003 |

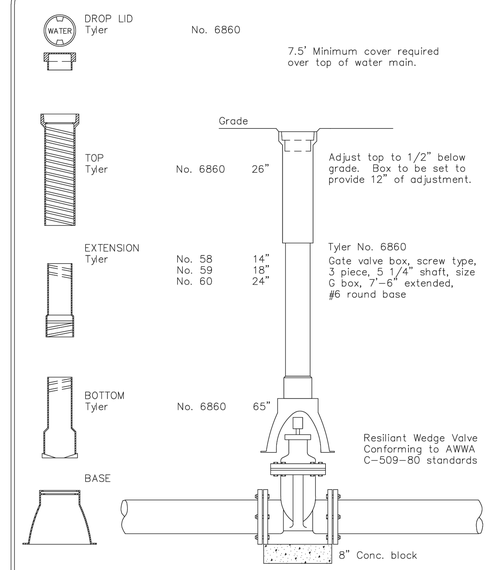


| | | |
|---|---|---|
| CITY OF NORTH BRANCH EST. 1881 | CITY OF NORTH BRANCH<br>BUTTERFLY VALVE INSTALLATION<br>NO SCALE | 2025 - STANDARD DETAIL<br>DETAIL NO.<br>WM - 004 |

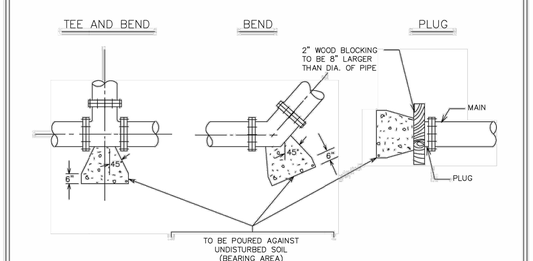


| PIPE SIZE | BEARING AREA |
|---|---|
| 6" | 4.0 SQ. FT. |
| 8" | 6.0 " |
| 10" – 12" | 12.0 " |
| 16" | 20.0 " |

NOTE:
1. RETAINER GLANDS/MEGA LUGS ARE TO BE USED AS SPECIFIED AT ALL CHANGES IN DIRECTION, FITTINGS, AND VALVES.
2. THRUST BLOCKING TO BE USED FOR BENDS 22-1/2" AND OVER.
3. THRUST BLOCKING SHALL ONLY BE USED WHERE WORKING PRESSURES ARE LESS THAN 150 PSI.
4. COVER FITTINGS WITH POLYETHYLENE (4 MIL) PRIOR TO POURING CONCRETE.
5. CONCRETE SHALL HAVE 2500 PSI, 28 DAY STRENGTH.

| | | |
|---|---|---|
| CITY OF NORTH BRANCH EST. 1881 | CITY OF NORTH BRANCH<br>THRUST BLOCKING<br>NO SCALE | 2025 - STANDARD DETAIL<br>DETAIL NO.<br>WM-005 |

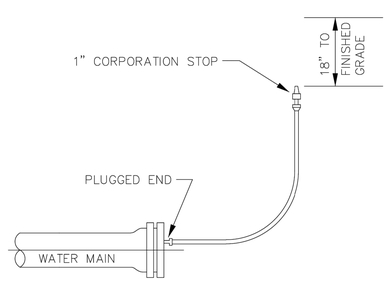


AFTER MEETING TEST REQUIREMENTS THE AIR BLEED LINE SHALL BE DISCONNECTED AT THE PLUG WITH NO ADDITIONAL COMPENSATION.

| | | |
|---|---|---|
| CITY OF NORTH BRANCH EST. 1881 | CITY OF NORTH BRANCH<br>AIR BLEED INSTALLATION DETAIL<br>NO SCALE | 2025 - STANDARD DETAIL<br>DETAIL NO.<br>WM - 007 |

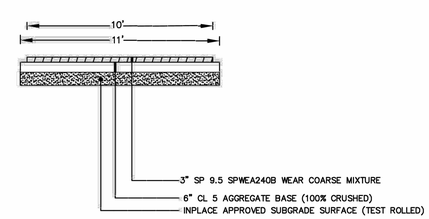


10' WIDE TRAIL TYPICAL SECTION

| | | |
|---|---|---|
| CITY OF NORTH BRANCH EST. 1881 | CITY OF NORTH BRANCH<br>TYPICAL BITUMINOUS TRAIL<br>NO SCALE | 2025 - STANDARD DETAIL<br>DETAIL NO.<br>RDW - 011 |

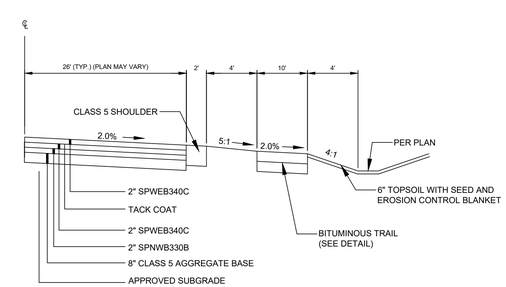


TYPICAL COUNTY ROAD TURN LANE & REPLACEMENT
N.T.S.

| REV NO. | DATE | DESCRIPTION |
|---|---|---|
| 1 | 04/01/2025 | REVISION PER CITY REVIEW |
| 2 | 04/24/2025 | REVISION PER CITY REVIEW |
| 3 | 05/29/2025 | REVISION PER CITY & COUNTY REVIEW |

DATE: 05/29/2025
DESIGN BY: M.J.M
DRAWN BY: M.J.M
CHECKED BY: C.J.D
DWG FILE: DETAILS
FILE NO.: 22-0030.00

I hereby certify that this plan, specification, or report was prepared by me or under my direct supervision and that I am a duly Licensed Professional Engineer under the laws of the State of Minnesota.

Signed: Christopher J. Dahn
Date: Lic. No. 58628

NOT FOR CONSTRUCTION

BOGART, PEDERSON & ASSOCIATES, INC.
LAND SURVEYING
CIVIL ENGINEERING
ENVIRONMENTAL SERVICES
13076 FIRST STREET, BECKER, MN 55308-9322
TEL: 763-226-9622 FAX: 763-262-5844

CEDAR RIDGE COMMUNITY LLC
CEDAR RIDGE COMMUNITY
City of North Branch, Chisago County, MN

DETAILS

SHEET NO.
C9.4

N:\Projects Current\22-0030.02 Belden North Branch Plat\Civil\CAD Files\NB Cover\SWPPP.dwg
5:33 PM
5/29/2025

# CONCRETE FOUNDATION PREPARATION (OR EQUAL)

vital™ cluster box unit - 1570 "F" Series

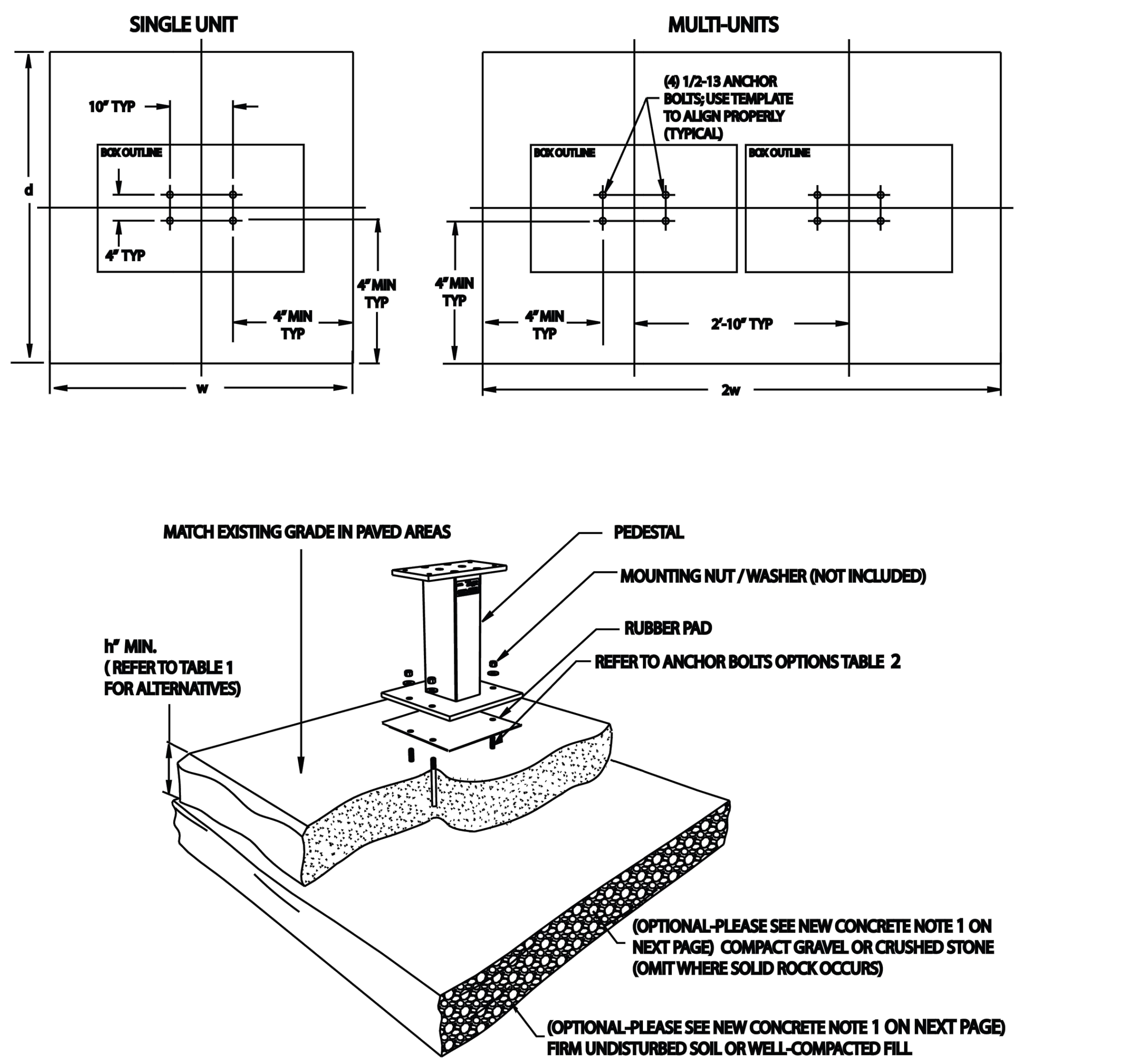


MAILBOX FOUNDATION
N.T.S.

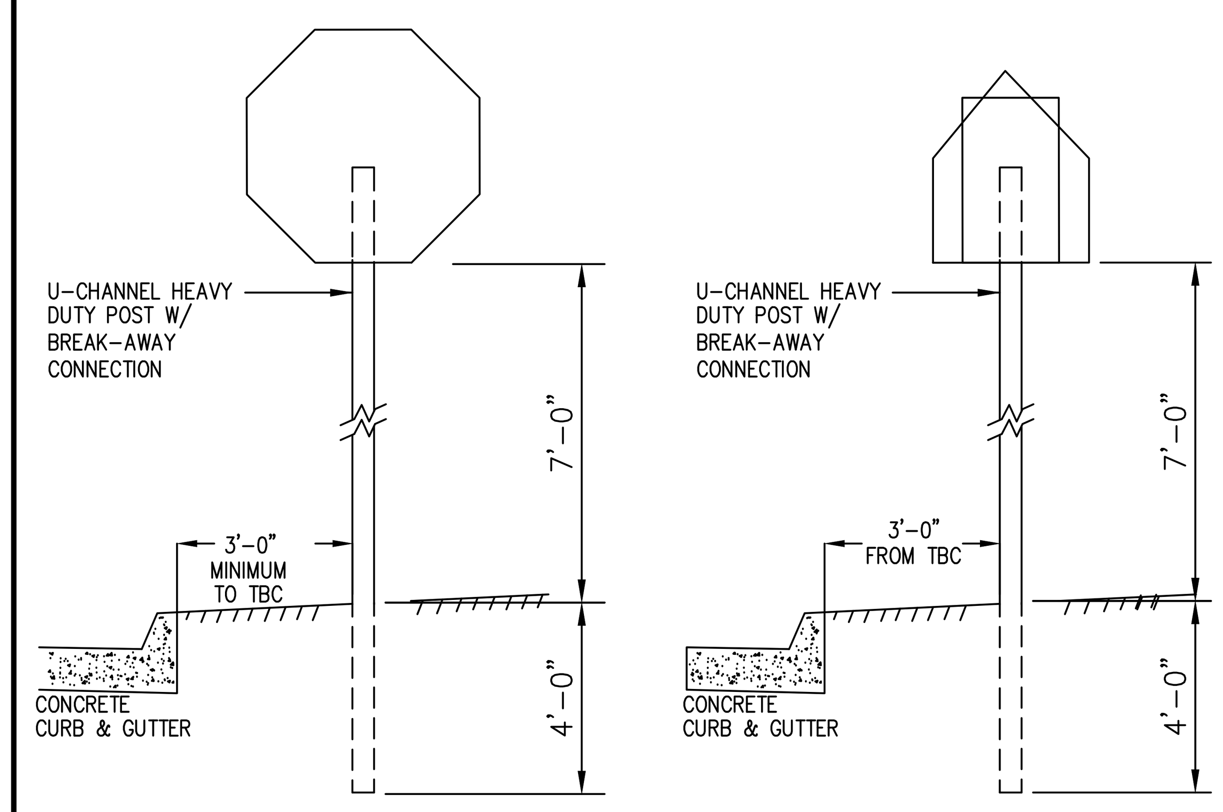


TRAFFIC SIGNS
N.T.S.

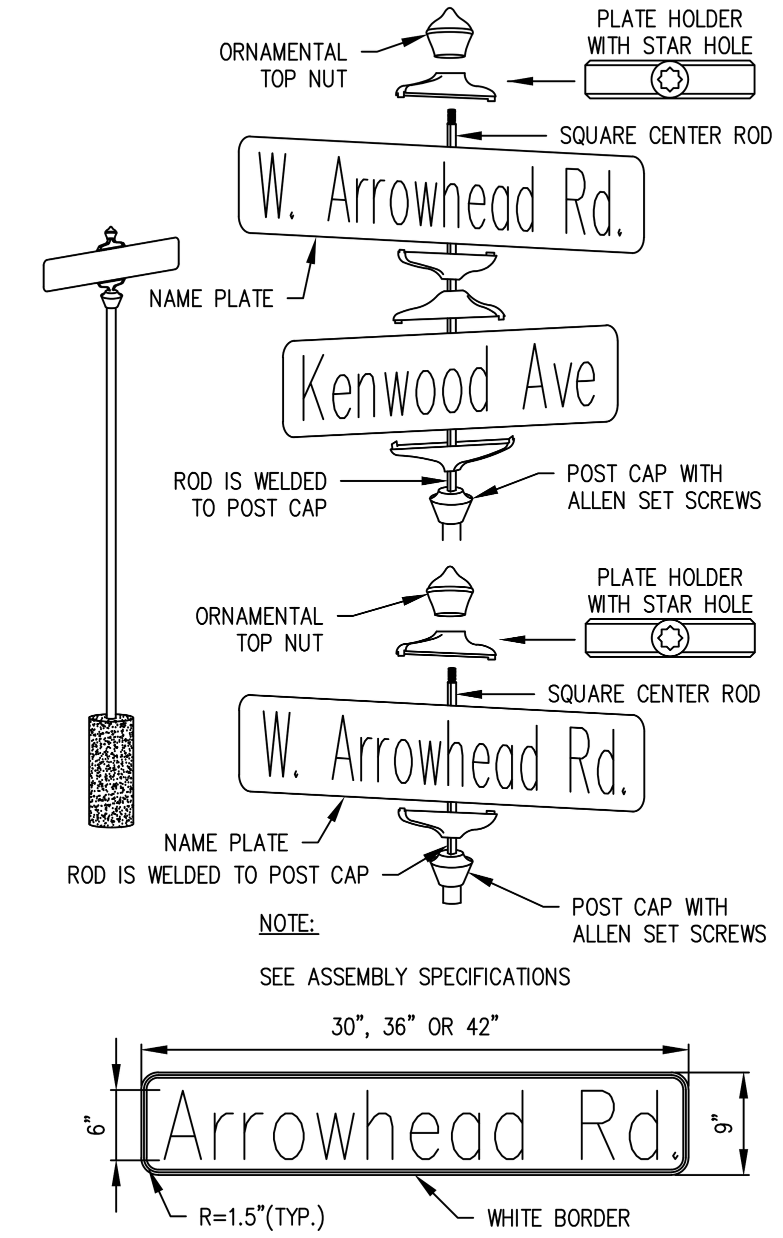


NOTES:

LETTERS & NUMBERS SHALL BE SERIES 'C' 6" UPPER & LOWER CASE.

WHITE BORDER SHALL BE 3/8".

LEGEND

| | |
|---|---|
| (thick line) | WHITE |
| (box) | GREEN |

TRAFFIC SIGNS
N.T.S.

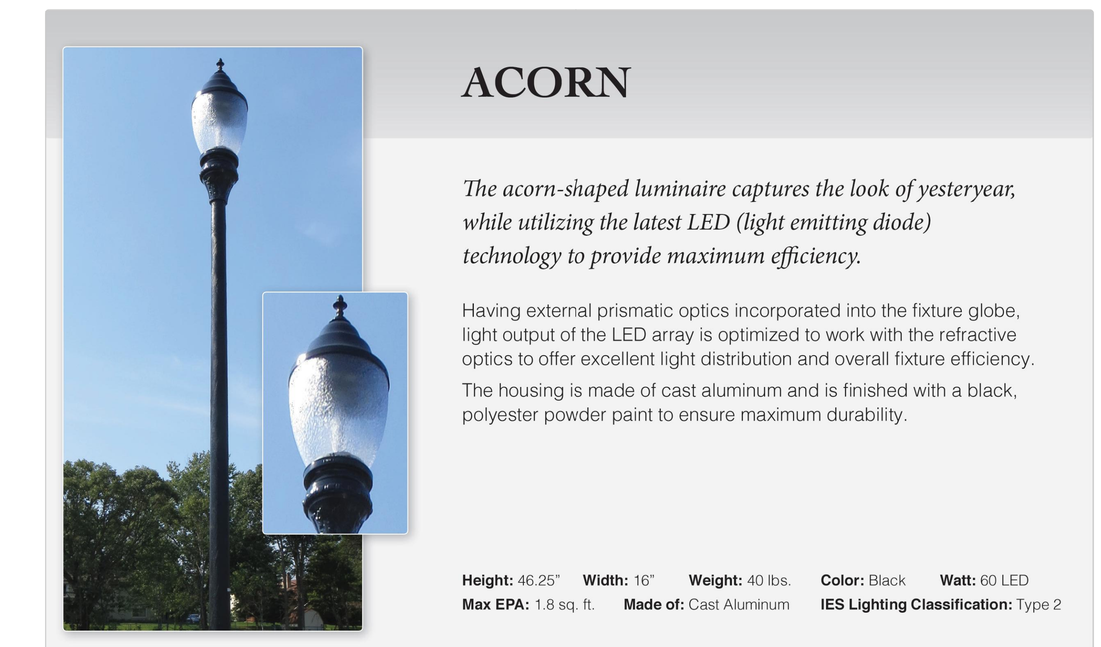


STREET LIGHTING
N.T.S.

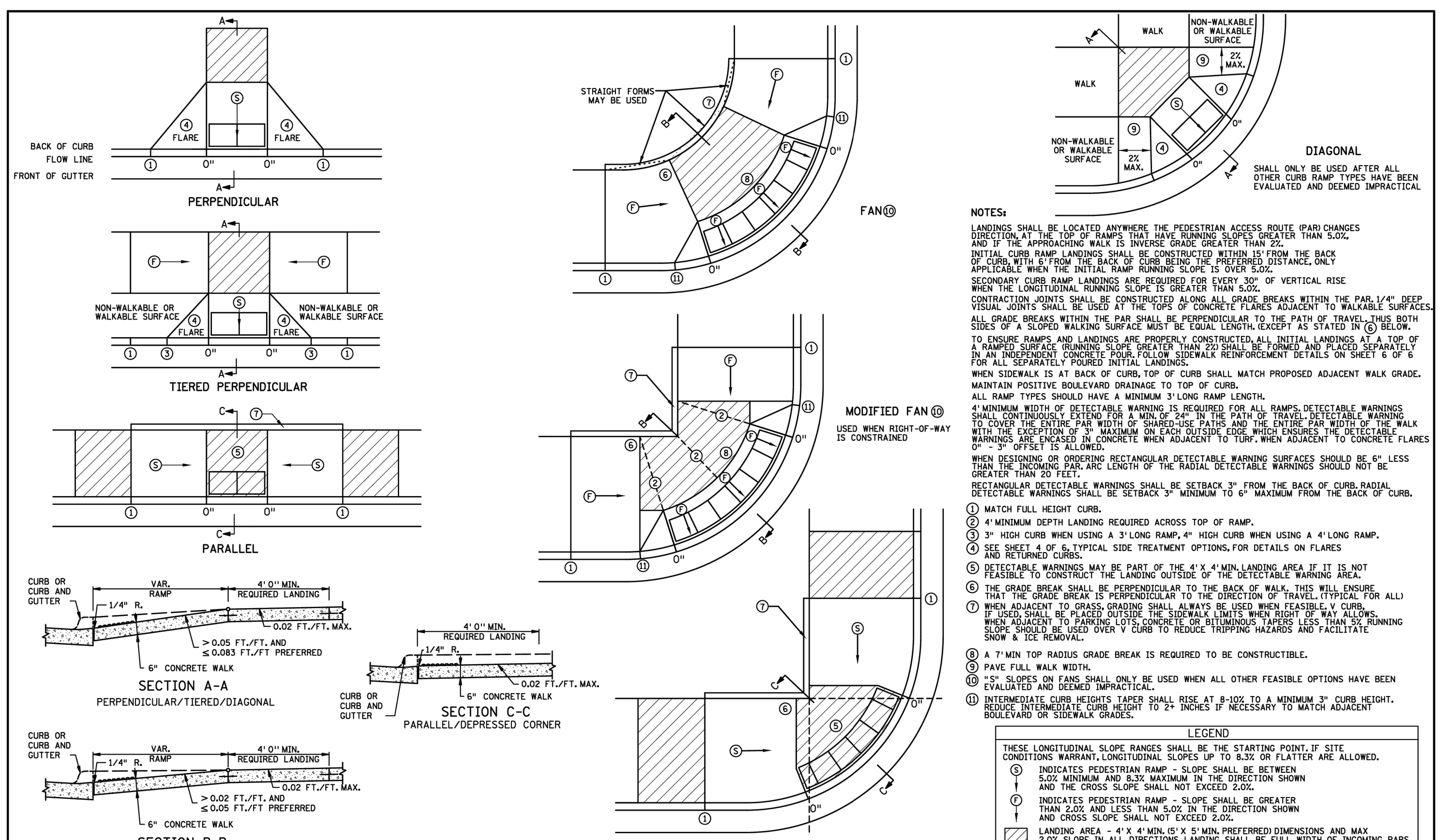


NOTES:

LANDINGS SHALL BE LOCATED ANYWHERE THE PEDESTRIAN ACCESS ROUTE (PAR) CHANGES DIRECTION, AT THE TOP OF RAMPS THAT HAVE RUNNING SLOPES GREATER THAN 5.0%, AND IF THE APPROACHING WALK IS INVERSE GRADE GREATER THAN 2%.

INITIAL CURB RAMP LANDINGS SHALL BE CONSTRUCTED WITHIN 15' FROM THE BACK OF CURB, WITH 6' FROM THE BACK OF CURB BEING THE PREFERRED DISTANCE, ONLY APPLICABLE WHEN THE INITIAL RAMP RUNNING SLOPE IS OVER 5.0%.

SECONDARY CURB RAMP LANDINGS ARE REQUIRED FOR EVERY 30" OF VERTICAL RISE WHEN THE LONGITUDINAL RUNNING SLOPE IS GREATER THAN 5.0%.

CONTRACTION JOINTS SHALL BE CONSTRUCTED ALONG ALL GRADE BREAKS WITHIN THE PAR. 1/4" DEEP VISUAL JOINTS SHALL BE USED AT THE TOPS OF CONCRETE FLARES ADJACENT TO WALKABLE SURFACES.

ALL GRADE BREAKS WITHIN THE PAR SHALL BE PERPENDICULAR TO THE PATH OF TRAVEL, THUS BOTH SIDES OF A SLOPED WALKING SURFACE MUST BE EQUAL LENGTH. (EXCEPT AS STATED IN ⑥ BELOW.

TO ENSURE RAMPS AND LANDINGS ARE PROPERLY CONSTRUCTED, ALL INITIAL LANDINGS AT A TOP OF A RAMPED SURFACE (RUNNING SLOPE GREATER THAN 2%) SHALL BE FORMED AND PLACED SEPARATELY IN AN INDEPENDENT CONCRETE POUR. FOLLOW SIDEWALK REINFORCEMENT DETAILS ON SHEET 6 OF 6 FOR ALL SEPARATELY POURED INITIAL LANDINGS.

WHEN SIDEWALK IS AT BACK OF CURB, TOP OF CURB SHALL MATCH PROPOSED ADJACENT WALK GRADE.

MAINTAIN POSITIVE BOULEVARD DRAINAGE TO TOP OF CURB.

ALL RAMP TYPES SHOULD HAVE A MINIMUM 3' LONG RAMP LENGTH.

4' MINIMUM WIDTH OF DETECTABLE WARNING IS REQUIRED FOR ALL RAMPS. DETECTABLE WARNINGS SHALL CONTINUOUSLY EXTEND FOR A MIN. OF 24" IN THE PATH OF TRAVEL. DETECTABLE WARNING TO COVER THE ENTIRE PAR WIDTH OF SHARED-USE PATHS AND THE ENTIRE PAR WIDTH OF THE WALK WITH THE EXCEPTION OF 3" MAXIMUM ON EACH OUTSIDE EDGE WHICH ENSURES THE DETECTABLE WARNINGS ARE ENCASED IN CONCRETE WHEN ADJACENT TO TURF. WHEN ADJACENT TO CONCRETE FLARES 0" - 3" OFFSET IS ALLOWED.

WHEN DESIGNING OR ORDERING RECTANGULAR DETECTABLE WARNING SURFACES SHOULD BE 6" LESS THAN THE INCOMING PAR. ARC LENGTH OF THE RADIAL DETECTABLE WARNINGS SHOULD NOT BE GREATER THAN 20 FEET.

RECTANGULAR DETECTABLE WARNINGS SHALL BE SETBACK 3" FROM THE BACK OF CURB. RADIAL DETECTABLE WARNINGS SHALL BE SETBACK 3" MINIMUM TO 6" MAXIMUM FROM THE BACK OF CURB.

① MATCH FULL HEIGHT CURB.
② 4' MINIMUM DEPTH LANDING REQUIRED ACROSS TOP OF RAMP.
③ 3" HIGH CURB WHEN USING A 3' LONG RAMP, 4" HIGH CURB WHEN USING A 4' LONG RAMP.
④ SEE SHEET 4 OF 6, TYPICAL SIDE TREATMENT OPTIONS, FOR DETAILS ON FLARES AND RETURNED CURBS.
⑤ DETECTABLE WARNINGS MAY BE PART OF THE 4' X 4' MIN. LANDING AREA IF IT IS NOT FEASIBLE TO CONSTRUCT THE LANDING OUTSIDE OF THE DETECTABLE WARNING AREA.
⑥ THE GRADE BREAK SHALL BE PERPENDICULAR TO THE BACK OF WALK. THIS WILL ENSURE THAT THE GRADE BREAK IS PERPENDICULAR TO THE DIRECTION OF TRAVEL. (TYPICAL FOR ALL)
⑦ WHEN ADJACENT TO GRASS, GRADING SHALL ALWAYS BE USED WHEN FEASIBLE. V CURB, IF USED, SHALL BE PLACED OUTSIDE THE SIDEWALK LIMITS WHEN RIGHT OF WAY ALLOWS. WHEN ADJACENT TO PARKING LOTS, CONCRETE OR BITUMINOUS TAPERS LESS THAN 5% RUNNING SLOPE SHOULD BE USED OVER V CURB TO REDUCE TRIPPING HAZARDS AND FACILITATE SNOW & ICE REMOVAL.
⑧ A 7' MIN TOP RADIUS GRADE BREAK IS REQUIRED TO BE CONSTRUCTIBLE.
⑨ PAVE FULL WALK WIDTH.
⑩ "S" SLOPES ON FANS SHALL ONLY BE USED WHEN ALL OTHER FEASIBLE OPTIONS HAVE BEEN EVALUATED AND DEEMED IMPRACTICAL.
⑪ INTERMEDIATE CURB HEIGHTS TAPER SHALL RISE AT 8-10% TO A MINIMUM 3" CURB HEIGHT. REDUCE INTERMEDIATE CURB HEIGHT TO 2+ INCHES IF NECESSARY TO MATCH ADJACENT BOULEVARD OR SIDEWALK GRADES.

LEGEND

THESE LONGITUDINAL SLOPE RANGES SHALL BE THE STARTING POINT. IF SITE CONDITIONS WARRANT, LONGITUDINAL SLOPES UP TO 8.3% OR FLATTER ARE ALLOWED.

- (S) INDICATES PEDESTRIAN RAMP - SLOPE SHALL BE BETWEEN 5.0% MINIMUM AND 8.3% MAXIMUM IN THE DIRECTION SHOWN AND THE CROSS SLOPE SHALL NOT EXCEED 2.0%.
- (F) INDICATES PEDESTRIAN RAMP - SLOPE SHALL BE GREATER THAN 2.0% AND LESS THAN 5.0% IN THE DIRECTION SHOWN AND CROSS SLOPE SHALL NOT EXCEED 2.0%.
- (hatch) LANDING AREA - 4' X 4' MIN. (5' X 5' MIN. PREFERRED) DIMENSIONS AND MAX 2.0% SLOPE IN ALL DIRECTIONS. LANDING SHALL BE FULL WIDTH OF INCOMING PARS.
- X" CURB HEIGHT

REVISION:
APPROVED: 11-04-2021
JEFFREY PERKINS
OPERATIONS DIVISION

MINNESOTA DEPARTMENT OF TRANSPORTATION
STANDARD PLAN 5-297.250 | 1 OF 6
APPROVED: 11-04-2021
REVISED:
THOMAS STYRBICKI STATE DESIGN ENGINEER
PEDESTRIAN CURB RAMP DETAILS
STATE PROJ. NO. (TH ) SHEET NO. OF SHEETS

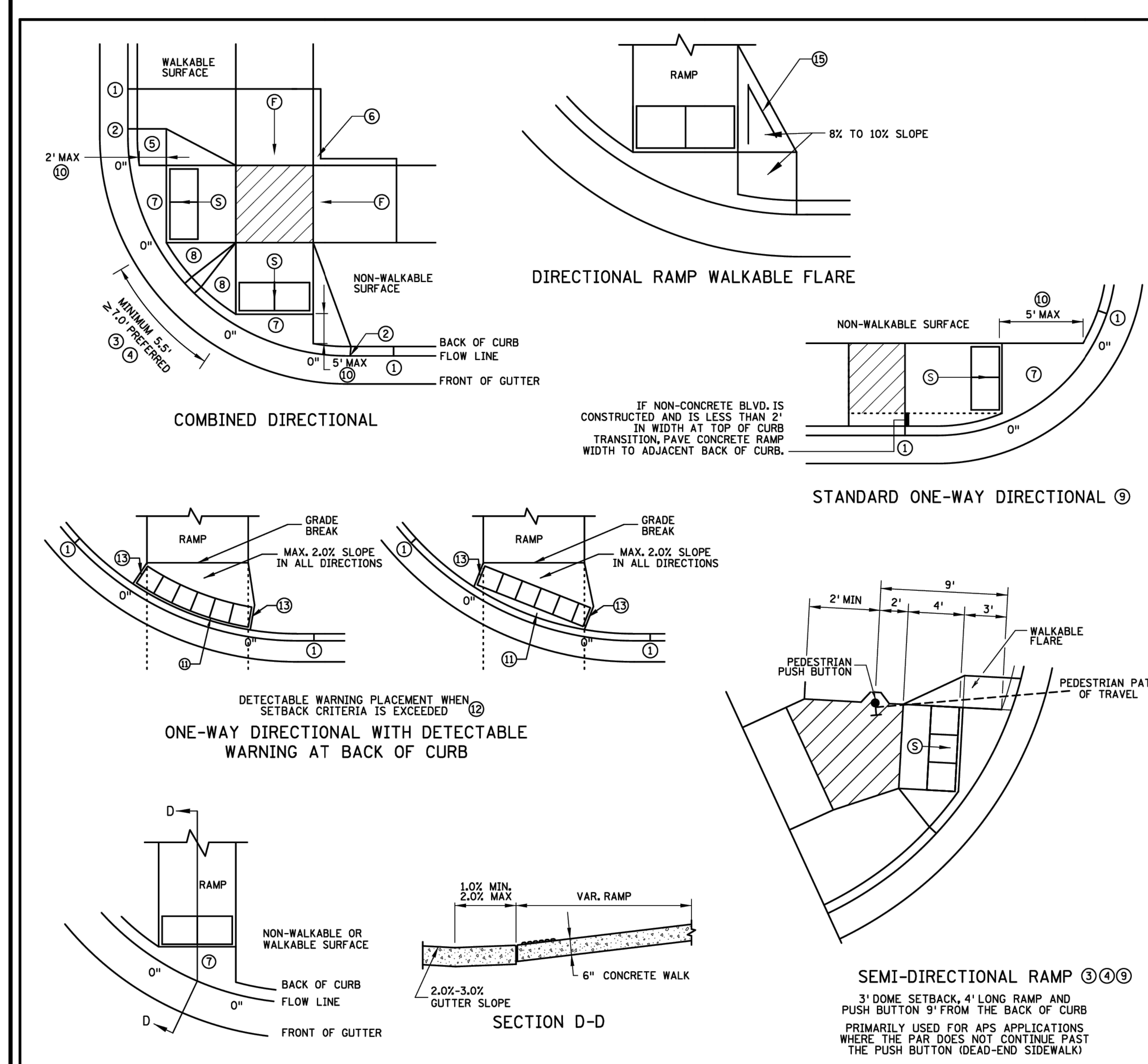


NOTES:

LANDINGS SHALL BE LOCATED ANYWHERE THE PEDESTRIAN ACCESS ROUTE (PAR) CHANGES DIRECTION, AT THE TOP OF RAMPS THAT HAVE RUNNING SLOPES GREATER THAN 5.0%, AND IF THE APPROACHING WALK IS INVERSE GRADE.

INITIAL CURB RAMP LANDINGS SHALL BE CONSTRUCTED WITHIN 15' FROM THE BACK OF CURB, WITH 6' FROM THE BACK OF CURB BEING THE PREFERRED DISTANCE, ONLY APPLICABLE WHEN THE INITIAL RAMP RUNNING SLOPE IS OVER 5.0%.

SECONDARY CURB RAMP LANDINGS ARE REQUIRED FOR EVERY 30" OF VERTICAL RISE WHEN THE LONGITUDINAL SLOPE IS GREATER THAN 5.0%.

CONTRACTION JOINTS SHALL BE CONSTRUCTED ALONG ALL GRADE BREAKS WITHIN THE PAR. 1/4" DEEP VISUAL JOINTS SHALL BE USED AT THE TOP GRADE BREAK OF CONCRETE FLARES ADJACENT TO WALKABLE SURFACES.

ALL GRADE BREAKS WITHIN THE PAR SHALL BE PERPENDICULAR TO THE PATH OF TRAVEL. THUS BOTH SIDES OF A SLOPED WALKING SURFACE MUST BE EQUAL LENGTH.

TO ENSURE INITIAL RAMPS AND INITIAL LANDINGS ARE PROPERLY CONSTRUCTED, LANDINGS SHALL BE CAST SEPARATELY. FOLLOW SIDEWALK REINFORCEMENT DETAILS ON SHEET 6 AND THE ADA SPECIAL PROVISION (PROSECUTION OF WORK).

TOP OF CURB SHALL MATCH PROPOSED ADJACENT WALK GRADE.

WHEN THE BOULEVARD IS 4' WIDE OR LESS, THE TOP OF CURB TAPER SHALL MATCH THE RAMP SLOPES TO REDUCE NEGATIVE BOULEVARD SLOPES FROM THE TOP BACK OF CURB TO THE PAR.

ALL RAMP TYPES SHOULD HAVE A MINIMUM 3' LONG RAMP LENGTH.

4' MINIMUM WIDTH OF DETECTABLE WARNING IS REQUIRED FOR ALL RAMPS. DETECTABLE WARNINGS SHALL CONTINUOUSLY EXTEND FOR A MIN. OF 24" IN THE PATH OF TRAVEL. DETECTABLE WARNING TO COVER THE ENTIRE PAR WIDTH OF SHARED-USE PATHS AND THE ENTIRE PAR WIDTH OF THE WALK WITH THE EXCEPTION OF 3" MAXIMUM ON EACH OUTSIDE EDGE WHICH ENSURES THE DETECTABLE WARNINGS ARE ENCASED IN CONCRETE WHEN ADJACENT TO TURF. WHEN ADJACENT TO CONCRETE FLARES 0" - 3" OFFSET IS ALLOWED.

WHEN DESIGNING OR ORDERING RECTANGULAR DETECTABLE WARNING SURFACES SHOULD BE 6" LESS THAN THE INCOMING PAR. ARC LENGTH OF THE RADIAL DETECTABLE WARNINGS SHOULD NOT BE GREATER THAN 20 FEET.

RADIAL DETECTABLE WARNINGS SHALL BE SETBACK 3" MINIMUM TO 6" MAXIMUM FROM THE BACK OF CURB. SEE NOTES ⑩ & ⑪ FOR INFORMATION REGARDING RECTANGULAR DETECTABLE WARNING PLACEMENT.

① MATCH FULL CURB HEIGHT.
② 3" HIGH CURB WHEN USING A 3' LONG RAMP
4" HIGH CURB WHEN USING A 4' LONG RAMP.
③ 3" MINIMUM CURB HEIGHT (5.5' MIN. DISTANCE REQUIRED BETWEEN DOMES)
4" PREFERRED (7' MIN. DISTANCE REQUIRED BETWEEN DOMES).
④ THE "BUMP" IN BETWEEN THE RAMPS SHOULD NOT BE IN THE PATH OF TRAVEL FOR COMBINED DIRECTIONAL RAMPS. IF THIS OCCURS MODIFY THE RAMP LOCATION OR SWITCH RAMP TO A FAN/DEPRESSED CORNER.
⑤ WHEN USING CONCRETE PAVED FLARES ON THE OUTSIDE OF DIRECTIONAL RAMPS, AND ADJACENT TO A WALKABLE SURFACE, DIRECTIONAL RAMP FLARES SHALL BE USED. SEE THE DETAIL ON THIS SHEET.
⑥ GRADING SHALL ALWAYS BE USED WHEN FEASIBLE. V CURB, IF USED, SHALL BE PLACED OUTSIDE THE SIDEWALK LIMITS WHEN RIGHT OF WAY ALLOWS. WHEN ADJACENT TO PARKING LOTS, CONCRETE OR BITUMINOUS TAPERS SHOULD BE USED OVER V CURB TO REDUCE TRIPPING HAZARDS AND FACILITATE SNOW & ICE REMOVAL.
⑦ MAX. 2.0% SLOPE IN ALL DIRECTIONS IN FRONT OF GRADE BREAK AND DRAIN TO FLOW LINE. SHALL BE CONSTRUCTED INTEGRAL WITH CURB AND GUTTER.
⑧ 8% TO 10% WALKABLE FLARE.
⑨ PLACE DOMES AT THE BACK OF CURB WHEN ALLOWABLE SETBACK CRITERIA IS EXCEEDED.
⑩ FRONT EDGE OF DETECTABLE WARNING SHALL BE SET BACK 2' MAXIMUM WHEN ADJACENT TO WALKABLE SURFACE, AND 5' MAXIMUM WHEN ADJACENT TO NON-WALKABLE SURFACE WITH ONE CORNER SET 3" FROM BACK OF CURB. A WALKABLE SURFACE IS DEFINED AS A PAVED SURFACE ADJACENT TO A CURB RAMP WITHOUT RAISED OBSTACLES THAT COULD MISTAKENLY BE TRAVERSED BY A USER WHO IS VISUALLY IMPAIRED.
⑪ RECTANGULAR DETECTABLE WARNINGS MAY BE SETBACK UP TO 9" FROM THE BACK OF CURB WITH CORNERS SET 3" FROM BACK OF CURB. IF 9" SETBACK IS EXCEEDED USE RADIAL DETECTABLE WARNINGS.
⑫ FOR DIRECTIONAL RAMPS WITH THE DETECTABLE WARNINGS PLACED AT THE BACK OF CURB, THE DETECTABLE WARNINGS SHALL COVER THE ENTIRE WIDTH OF THE WALK/PATH. THIS ENSURES A DETECTABLE EDGE AND HELPS ELIMINATE THE CURB TAPER OBSTRUCTING THE PATH OF PEDESTRIAN TRAVEL.
⑬ THE CONCRETE WALK SHALL BE FORMED AND CONSTRUCTED PERPENDICULAR TO THE BACK OF CURB. MAINTAIN 3" BETWEEN EDGE OF DOMES AND EDGE OF CONCRETE.
⑭ TO BE USED FOR ALL DIRECTIONAL RAMPS, EXCEPT WHERE DOMES ARE PLACED ALONG THE BACK OF CURB.
⑮ PLACE 2 NO. 4 BARS 4 INCHES FROM SIDE OF FORMS WITH A MINIMUM 2 INCHES OF CONCRETE COVER ALONG EACH SIDE OF FLARE (INCIDENTAL).

LEGEND

THESE LONGITUDINAL SLOPE RANGES SHALL BE THE STARTING POINT. IF SITE CONDITIONS WARRANT, LONGITUDINAL SLOPES UP TO 8.3% OR FLATTER ARE ALLOWED.

- (S) INDICATES PEDESTRIAN RAMP - SLOPE SHALL BE BETWEEN 5.0% MINIMUM AND 8.3% MAXIMUM IN THE DIRECTION SHOWN AND THE CROSS SLOPE SHALL NOT EXCEED 2.0%.
- (F) INDICATES PEDESTRIAN RAMP - SLOPE SHALL BE GREATER THAN 2.0% AND LESS THAN 5.0% IN THE DIRECTION SHOWN AND CROSS SLOPE SHALL NOT EXCEED 2.0%.
- (hatch) LANDING AREA - 4' X 4' MIN. (5' X 5' MIN. PREFERRED) DIMENSIONS AND MAX 2.0% SLOPE IN ALL DIRECTIONS. LANDING SHALL BE FULL WIDTH OF INCOMING PARS.
- X" CURB HEIGHT

REVISION:
APPROVED: 11-04-2021
JEFFREY PERKINS
OPERATIONS DIVISION

MINNESOTA DEPARTMENT OF TRANSPORTATION
STANDARD PLAN 5-297.250 | 2 OF 6
APPROVED: 11-04-2021
REVISED:
THOMAS STYRBICKI STATE DESIGN ENGINEER
PEDESTRIAN CURB RAMP DETAILS
STATE PROJ. NO. (T.H. ) SHEET NO. OF SHEETS

| REV NO. | DATE | DESCRIPTION |
|---|---|---|
| 1 | 04/01/2025 | REVISION PER CITY REVIEW |
| 2 | 04/24/2025 | REVISION PER CITY REVIEW |
| 3 | 05/29/2025 | REVISION PER CITY & COUNTY REVIEW |

DATE: 05/29/2025
DESIGN BY: MJM
DRAWN BY: MJM
CHECKED BY: CJD
DWG FILE: DETAILS
FILE NO.: 22-0030.00

I hereby certify that this plan, specification, or report was prepared by me or under my direct supervision and that I am a duly Licensed Professional Engineer under the laws of the State of Minnesota.

NOT FOR CONSTRUCTION

Signed: Christopher J. Dahn
Date: ____ Lic. No. 58628


BOGART, PEDERSON & ASSOCIATES, INC.
LAND SURVEYING
CIVIL ENGINEERING
ENVIRONMENTAL SERVICES
13076 FIRST STREET, BECKER, MN 55308-9322
TEL: 763-262-8822 FAX: 763-262-8844


CEDAR RIDGE COMMUNITY LLC
CEDAR RIDGE COMMUNITY
City of North Branch, Chisago County, MN

DETAILS

SHEET NO.

C9.5

5/29/2025 5:33 PM N:\Projects Current\22-0030.02 Betzler North Branch Plat\Civil\CAD Files\NB CoverSWPPP.dwg

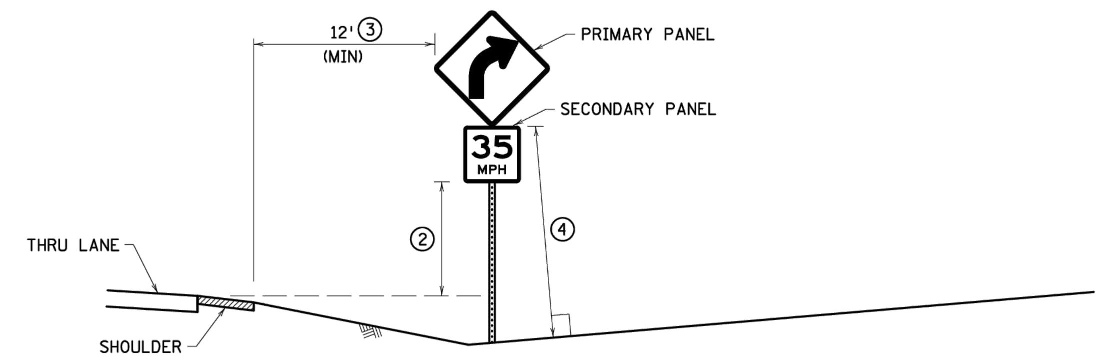


PRIMARY AND SECONDARY PANELS

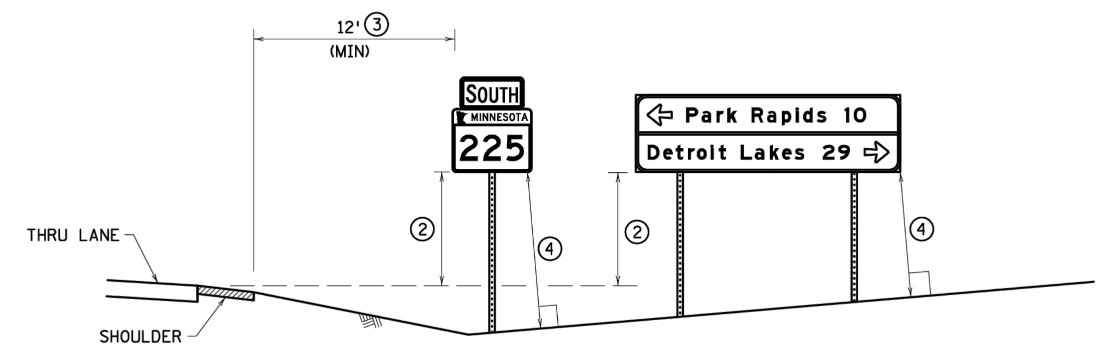


STANDARD LOCATIONS

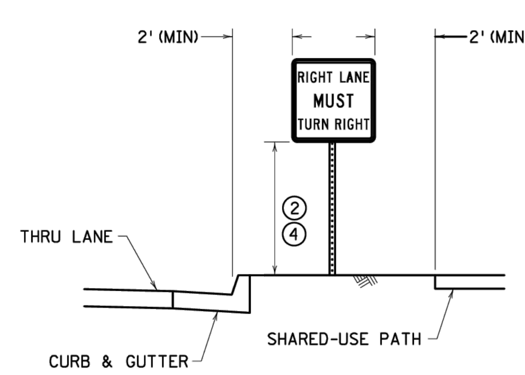


BOULEVARD LOCATIONS
6' TO 12' WIDE

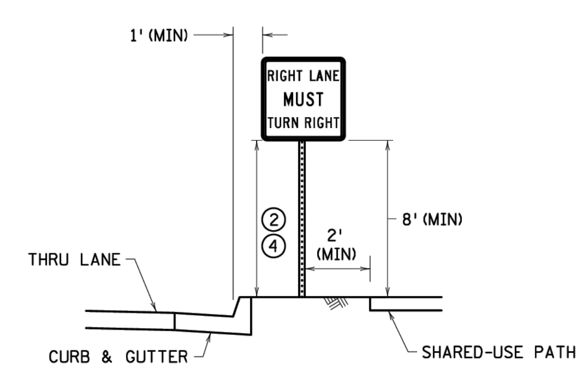


BOULEVARD LOCATIONS ①
LESS THAN 6' WIDE

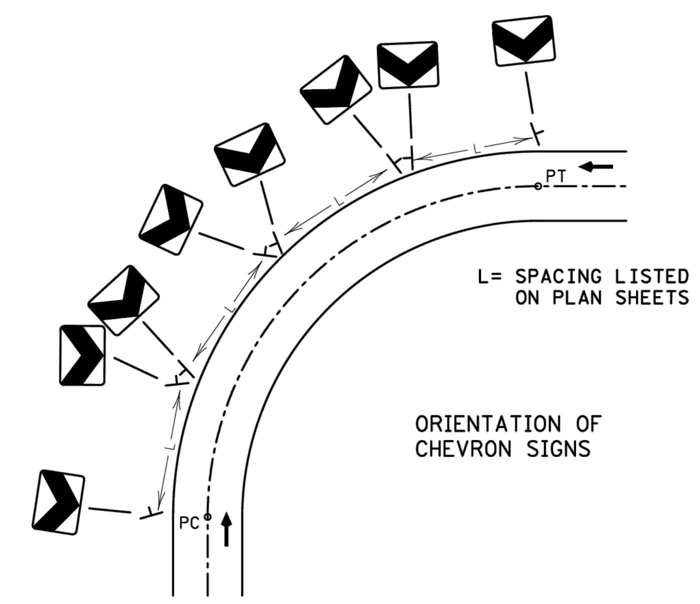


ORIENTATION OF CHEVRON SIGNS

NOTES:

PLACE SIGNS AND ORIENT THEM APPROXIMATELY AS SHOWN IN THE PLAN, AT RIGHT ANGLES TO THE DIRECTION OF, AND FACING THE TRAFFIC THEY ARE INTENDED TO SERVE, UNLESS OTHERWISE SPECIFIED. TO AVOID SPECULAR GLARE, TURN SIGNS APPROXIMATELY THREE DEGREES AWAY FROM APPROACHING TRAFFIC.

IF A SIGN NEEDS TO BE REPOSITIONED FROM THE PROPOSED PLAN LOCATION IN ORDER TO AVOID CONFLICTS WITH UTILITIES OR OBSTACLES, CONTACT THE PROJECT ENGINEER.

MOUNT SIGN FACES PLUMB.

LATERAL CLEARANCES GIVEN APPLY TO RIGHT AND/OR LEFT SIDE INSTALLATION.

ERECT OR CONSTRUCT SIGN SUPPORT SO THAT NO PORTION OF THE SIGN PANEL IS WITHIN 8.5' OF THE RAIL OF A RAILROAD TRACK.

PLACE SIGNS SUCH THAT OBSTACLES DO NOT BLOCK THEM FROM BEING VIEWED BY THE APPROACHING TRAFFIC.

PLACE SIGNS A MINIMUM OF 10' FROM THE NEAREST OBSTACLE. OBSTACLES MAY INCLUDE, BUT ARE NOT LIMITED TO, LIGHT POLES, TREES, SIGNS, AND BUILDINGS. SIGNS MAY BE PLACED CLOSER TO SIGNS IN TIGHT AREAS, BUT NO MORE THAN TWO POSTS IN A 7' DIAMETER CIRCLE.

① TO BE USED ONLY WHEN BOULEVARD IS TOO NARROW TO OBTAIN ADEQUATE CURBED LOCATION SIGN OFFSETS.

② ALL SIGN MOUNTING HEIGHTS ARE MEASURED VERTICALLY FROM THE BOTTOM OF THE LOWEST SIGN PANEL TO THE TOP OF THE CURB, OR IN ABSENCE OF CURB, TO THE NEAR EDGE OF THE THRU-LANE PAVEMENT. SEE SIGN TABULATIONS.

③ MINIMUM OFFSET MAY BE REDUCED TO AT LEAST 6' FROM SHOULDER AND AT LEAST 12' FROM THRU LANE IF SITE CONDITIONS PROHIBIT A 12' OFFSET FROM SHOULDER.

④ CRASHWORTHY HEIGHT IS AT LEAST 7' FOR BREAKAWAY STRUCTURES AND AT LEAST 4' FOR BENDABLE STRUCTURES. SEE SPECIFIC SQUARE TUBE BASE STRUCTURE PLAN FOR CRASH RESPONCE TYPE. THE CRASHWORTHY HEIGHT IS MEASURED TO THE BOTTOM OF THE PRIMARY SIGN PANEL EXCLUDING ANY SECONDARY SIGN PANELS, MARKERS, DELINEATORS, AND REFERENCE LOCATION SIGN PANELS. ANY SECONDARY SIGN PANELS MOUNTED TO MORE THAN ONE POST ARE CONSIDERED PRIMARY SIGN PANELS FOR CRASHWORTHY PURPOSES.

REVISION:
APPROVED: 02-28-2022
BRIAN SORENSON
STATE TRAFFIC ENGINEER

MINNESOTA DEPARTMENT OF TRANSPORTATION

STANDARD PLAN 5-297.701 | 1 OF 1
APPROVED: 02-28-2022
REVISED:
THOMAS STYRBICKI, STATE DESIGN ENGINEER

STANDARD SIGN PLACEMENT

STATE PROJ. NO. (T.H. ) SHEET NO. OF SHEETS

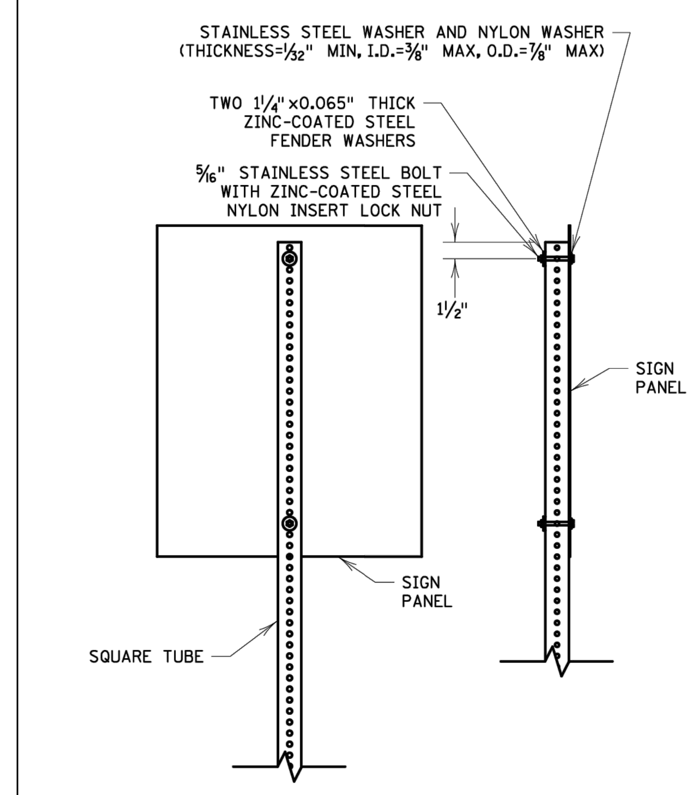


FOR SIGN PANELS UP TO 30" WIDE

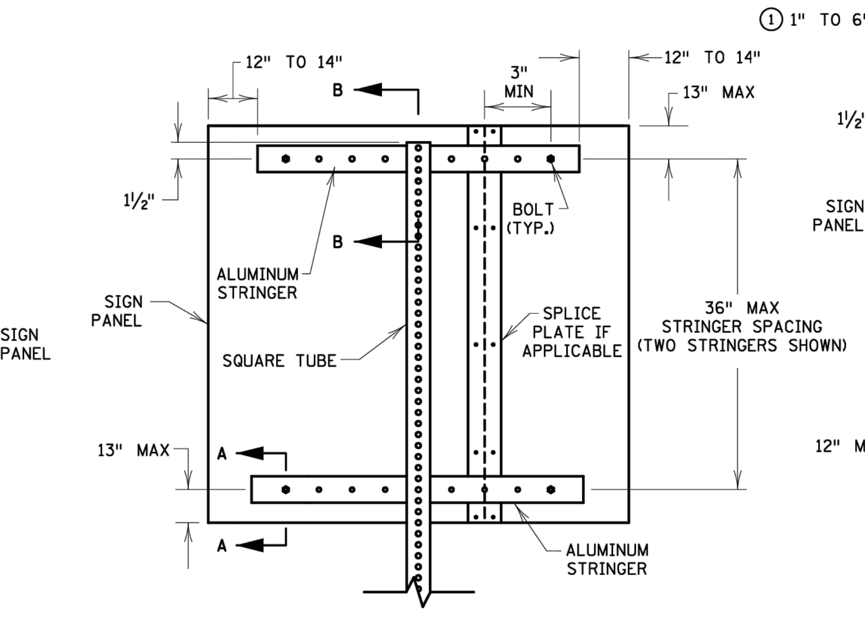


FOR SIGN PANELS 36" WIDE OR GREATER ON ONE POST

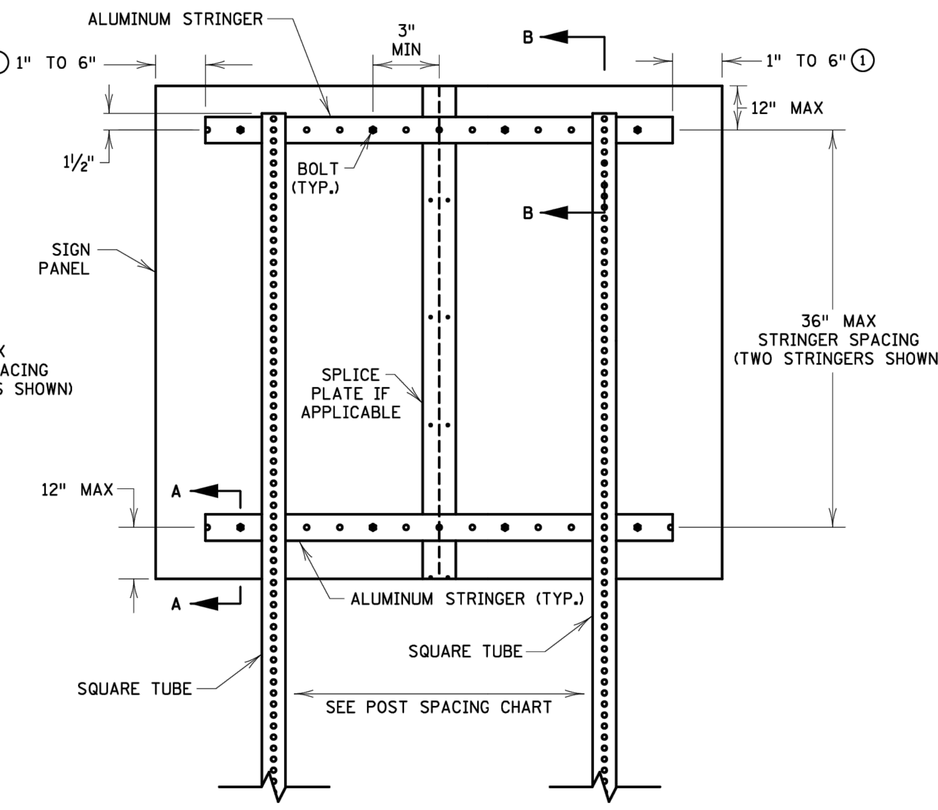


FOR SIGN PANELS ON TWO OR MORE POSTS

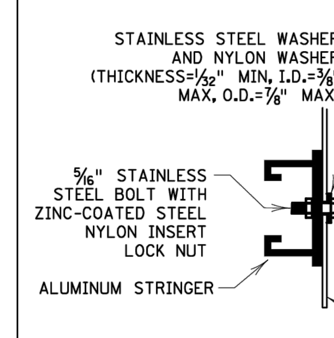


VIEW A-A

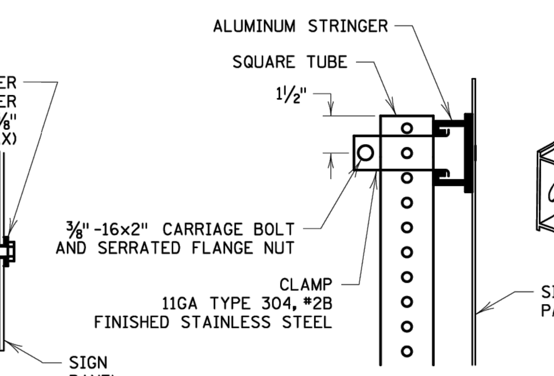


VIEW B-B

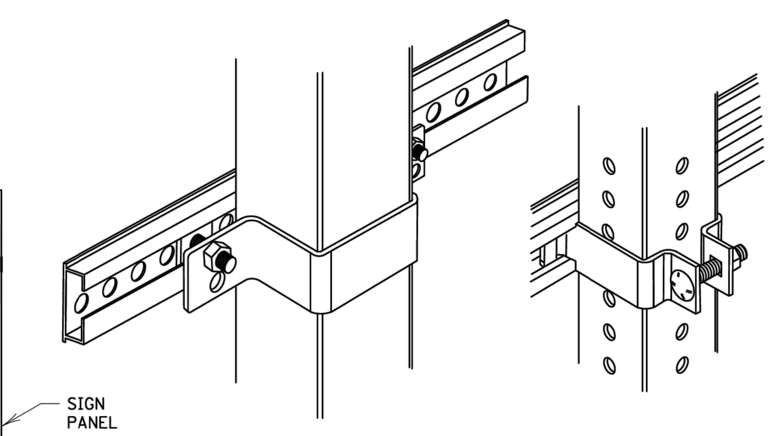


CLAMP DETAIL
4" SQUARE TUBE

CLAMP DETAIL
2" AND 2 1/2" SQUARE TUBE

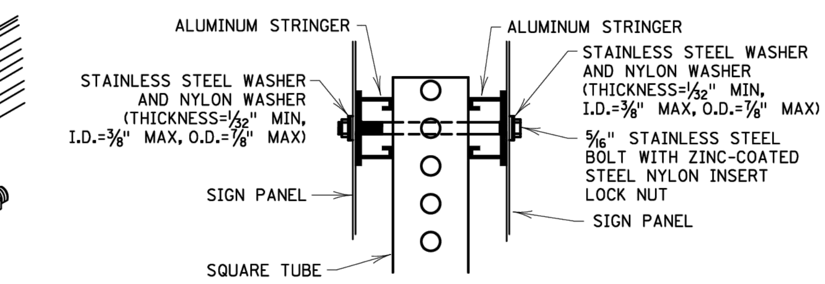


BACK-TO-BACK SIGN MOUNTING WITH STRINGERS

NOTES:

BOLT SIGN PANELS TO STRINGERS OR RISER POSTS AT NO GREATER THAN 24" SPACING OR ACCORDING TO THE MNDOT STANDARD SIGNS AND MARKINGS MANUAL FOR MOUNTING HOLES (PUNCH CODES) INFORMATION.

CENTER STRINGERS ON SIGN PANEL.

① IF POST SPACING REQUIRES PLACEMENT OF A POST WITHIN THIS AREA, EXTEND STRINGERS AS NEEDED TO ACCOMMODATE THE STRINGER TO POST CLAMP.

LEAD EXPERT OFFICE: BRIAN SORENSON, STATE TRAFFIC ENGINEER, OFFICE OF TRAFFIC ENGINEERING

SQUARE-TUBE SIGN MOUNTING DETAILS

APPROVED: 08-09-2023
REVISED:
THOMAS STYRBICKI, STATE DESIGN ENGINEER

STANDARD PLAN 5-297.718 | 1 OF 3

DEPARTMENT OF TRANSPORTATION

STANDARD PLAN | STATE PROJ. NO. | SHEET NO. | TRUNK HWY. | TOTAL SHEETS

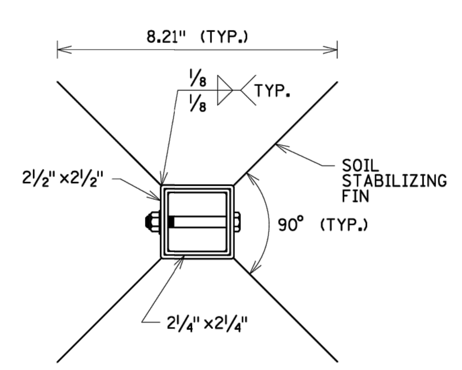


VIEW A-A

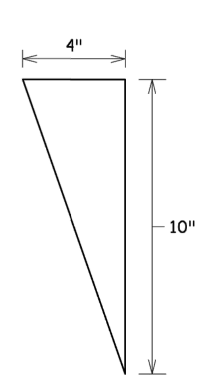


SOIL STABILIZING FIN
FOUR REQUIRED

12-GAUGE PRE-GALVANIZED ASTM A569 STEEL. WELD THE 10" EDGE OF EACH FIN TO EACH CORNER OF THE 2 1/2" SQUARE TUBE. SEE VIEW A-A FOR WELDING DETAILS. WELDS MUST BE ZINC-COATED.

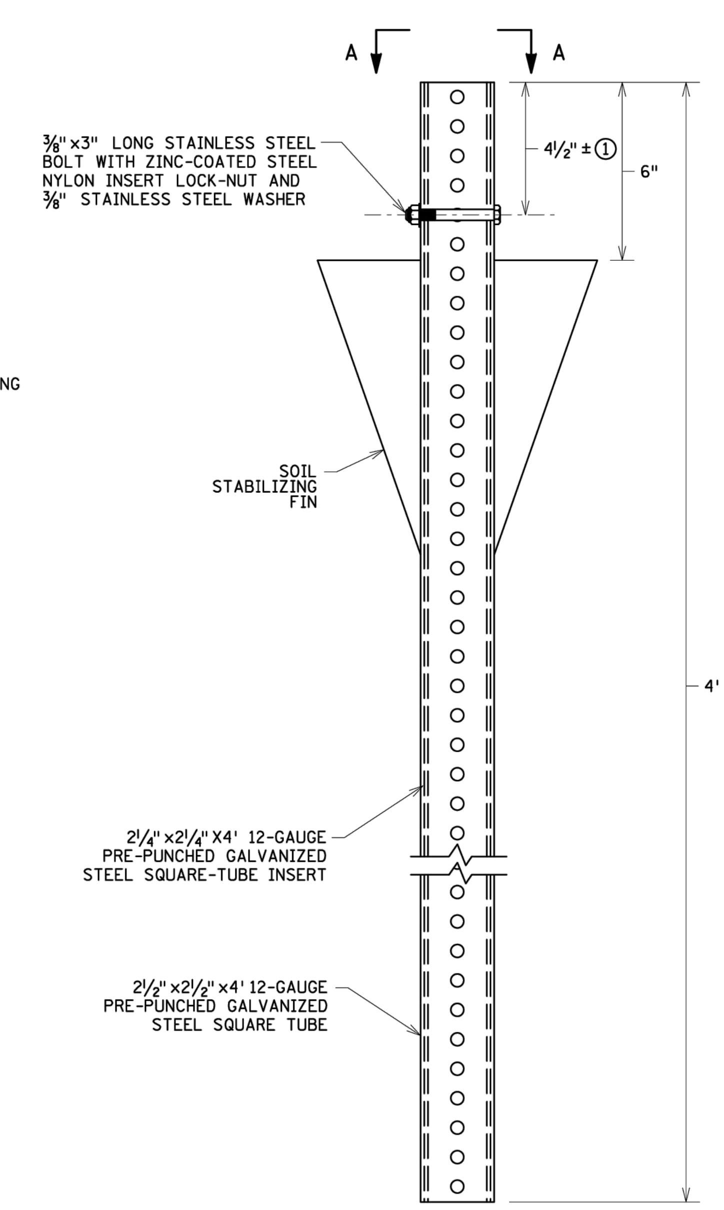


FIN BASE ASSEMBLY

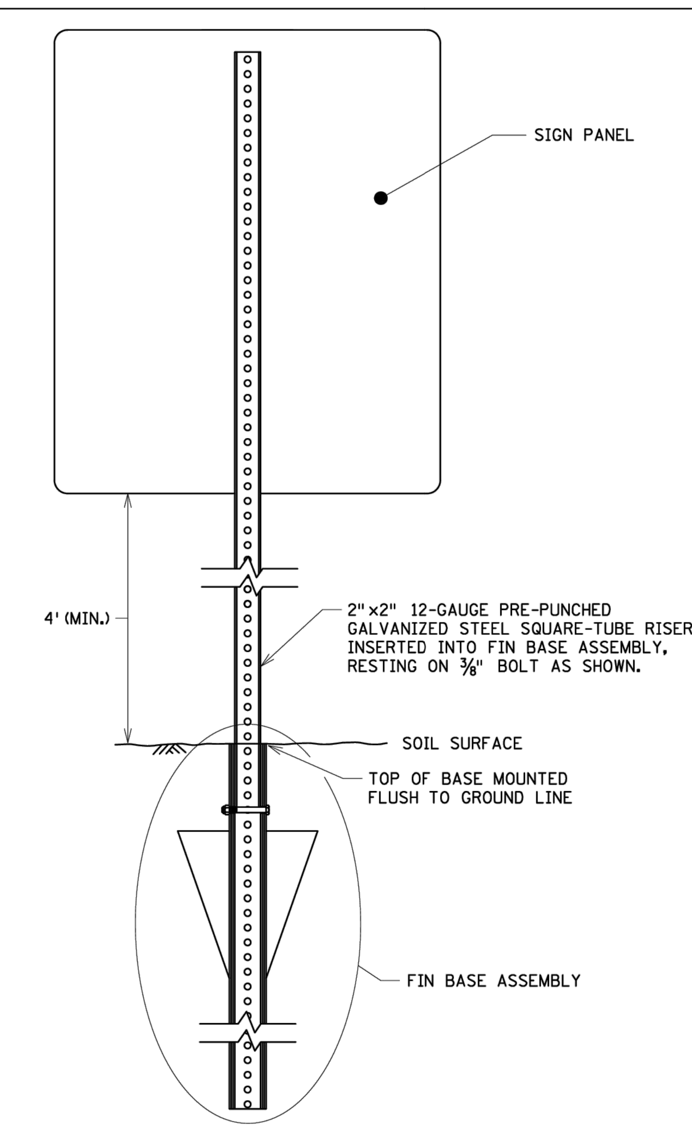


FIN BASE IN SOIL

NOTES:

THE CRASH RESPONSE TYPE FOR THIS STRUCTURE IS BENDABLE.

TO MEET CRASHWORTHY REQUIREMENTS, THE DISTANCE BETWEEN THE BOTTOM OF THE SIGN PANEL AND THE GROUND SURFACE BELOW ANY PORTION OF THE SIGN PANEL MUST BE A MINIMUM OF 4'. SEE TABULATIONS FOR MOUNTING HEIGHT.

SEE STANDARD PLAN 5-297.718 FOR ADDITIONAL MOUNTING DETAILS.

SQUARE-TUBE SIGN POSTS IN ACCORDANCE WITH SPEC. 3402.

① INSERT BOLT IN 5TH HOLE DOWN.

LEAD EXPERT OFFICE: BRIAN SORENSON, STATE TRAFFIC ENGINEER, OFFICE OF TRAFFIC ENGINEERING

FIN BASE
FOR 2" SQUARE-TUBE RISER POST IN SOIL

APPROVED: 08-09-2023
REVISED:
THOMAS STYRBICKI, STATE DESIGN ENGINEER

STANDARD PLAN 5-297.722 | 1 OF 1

DEPARTMENT OF TRANSPORTATION

STANDARD PLAN | STATE PROJ. NO. | SHEET NO. | TRUNK HWY. | TOTAL SHEETS

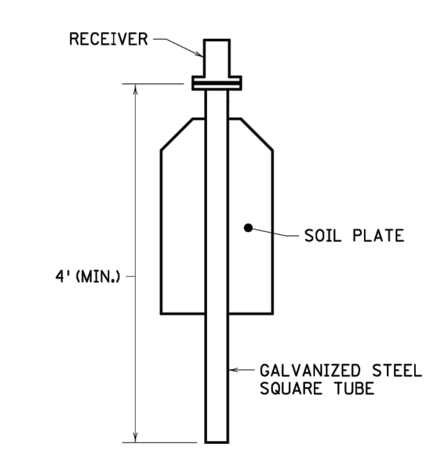


PROPRIETARY SLIP BASE ASSEMBLY ①

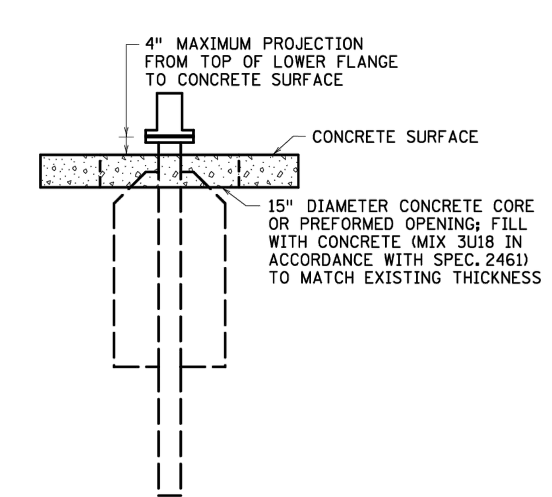


SLIP BASE ASSEMBLY IN CONCRETE

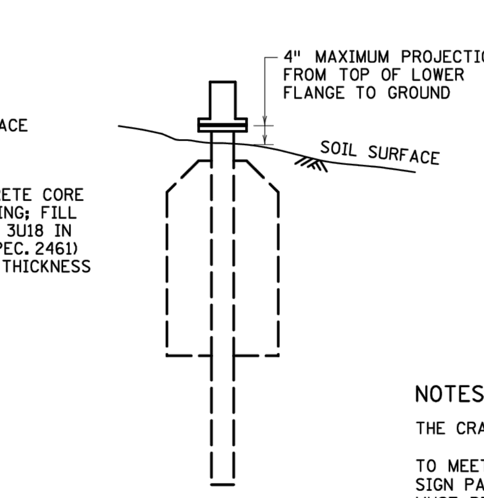


SLIP BASE ASSEMBLY IN SOIL

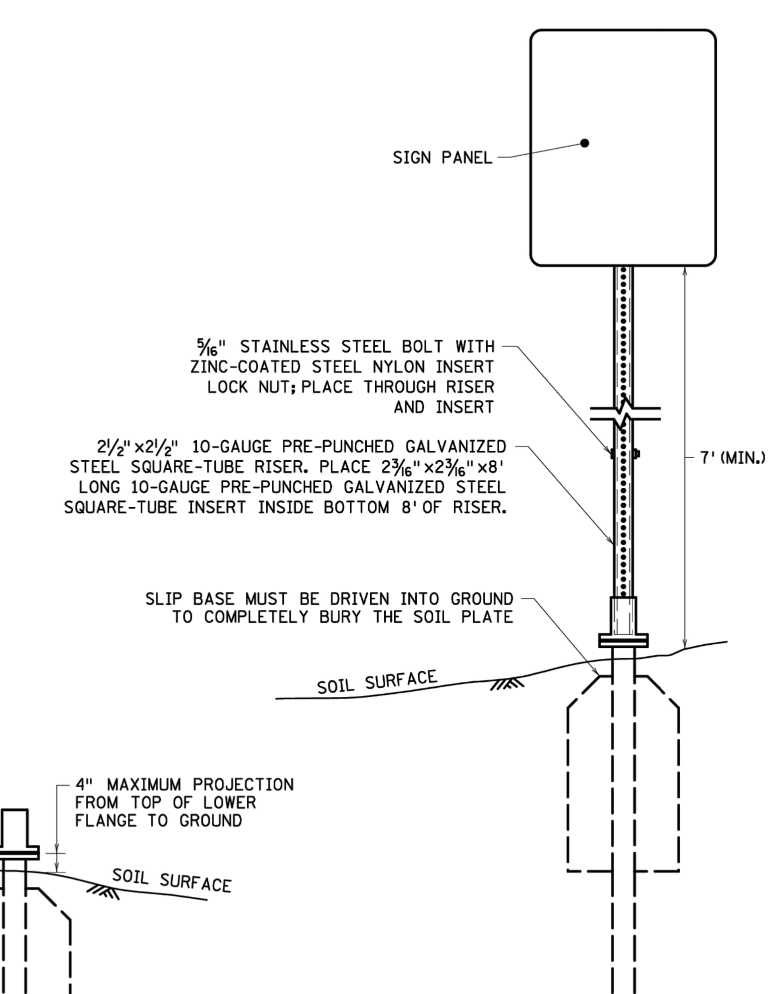


SLIP BASE ASSEMBLY WITH SINGLE-POST SIGN
TYPICAL PLACEMENT IN SOIL

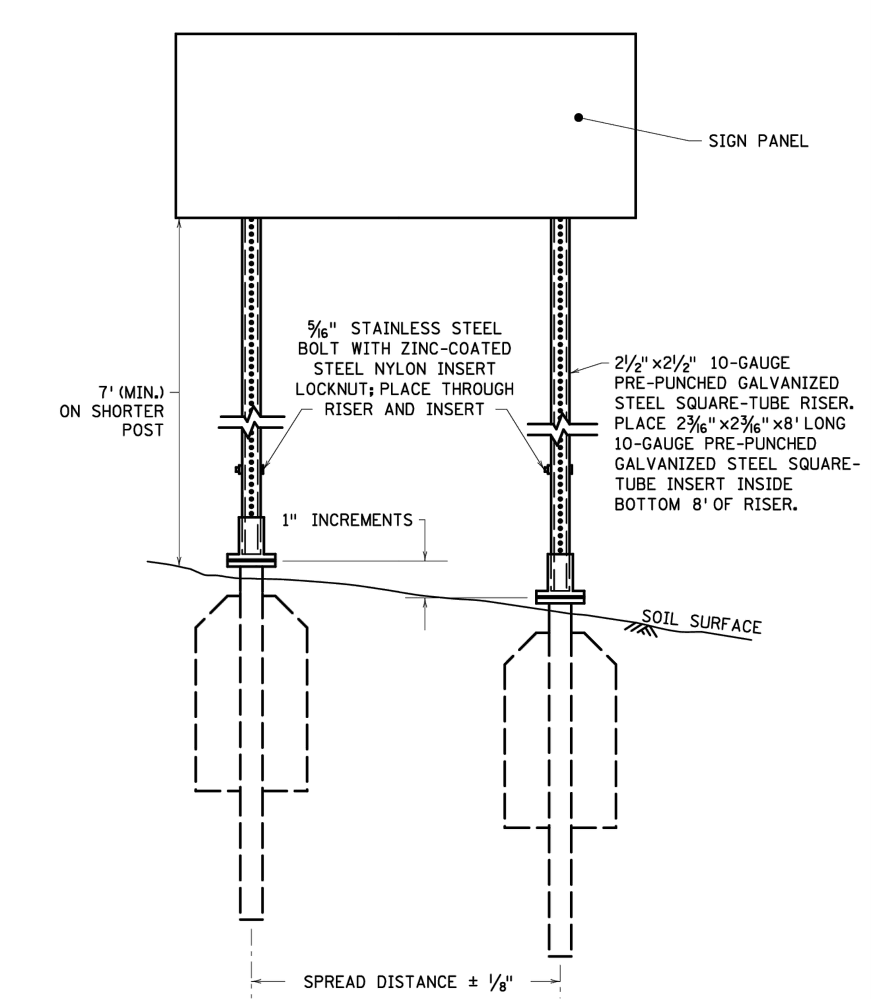


SLIP BASE ASSEMBLY WITH MULTIPLE-POST SIGN ②
TYPICAL PLACEMENT IN SOIL

NOTES:

THE CRASH RESPONSE TYPE FOR THIS STRUCTURE IS BREAKAWAY.

TO MEET CRASHWORTHY REQUIREMENTS, THE DISTANCE BETWEEN THE BOTTOM OF THE PRIMARY SIGN PANEL AND THE GROUND SURFACE BELOW ANY PORTION OF THE PRIMARY SIGN PANEL MUST BE A MINIMUM OF 7'. SEE SIGNING PLAN TABULATIONS FOR MOUNTING HEIGHT.

1/16"-THICK LEVELING SHIMS MAY BE USED TO PLUMB TOP HALF. PLACE SHIMS UNDER TEFLON-COATED SLIP WASHER. MAXIMUM OF TWO SHIMS PER NOTCH POINT.

FOR SIGN PANEL MOUNTING DETAILS, SEE STANDARD PLAN 5-297.718.

SQUARE TUBE SIGN POST IN ACCORDANCE WITH MnDOT SPEC. 3402.

① USE APPROVED PRODUCT FROM THE SIGN STRUCTURES PAGE OF THE SIGNING SECTION OF THE APPROVED PRODUCTS LIST.

② FOR MULTIPLE-POST APPLICATIONS, ENSURE SOIL PLATES ARE COMPLETELY BURIED. IF SOIL SURFACE IS NOT LEVEL, DRIVE THE BASES UNTIL THEY ARE OFFSET IN 1" INCREMENTS. THE BASES MUST BE TRUE AND SQUARE WITH ONE ANOTHER TO ENSURE PROPER UNRESTRICTED INSERTION OF STEEL TUBE RISERS. MOUNT SIGN PANELS LEVEL.

LEAD EXPERT OFFICE: BRIAN SORENSON, STATE TRAFFIC ENGINEER, OFFICE OF TRAFFIC ENGINEERING

SLIP BASE ASSEMBLY
FOR 2½" SQUARE-TUBE RISER POST

APPROVED: 08-09-2023
REVISED:
THOMAS STYRBICKI, STATE DESIGN ENGINEER

STANDARD PLAN 5-297.724 | 1 OF 1

DEPARTMENT OF TRANSPORTATION

STANDARD PLAN | STATE PROJ. NO. | SHEET NO. | TRUNK HWY. | TOTAL SHEETS

| REV NO. | DATE | DESCRIPTION |
|---|---|---|
| 1 | 04/01/2025 | REVISION PER CITY REVIEW |
| 2 | 04/24/2025 | REVISION PER CITY REVIEW |
| 3 | 05/29/2025 | REVISION PER CITY & COUNTY REVIEW |

DATE: 05/29/2025
DESIGN BY: MJM
DRAWN BY: MJM
CHECKED BY: CJD
DWG FILE: DETAILS
FILE NO.: 22-0030.00

I hereby certify that this plan, specification, or report was prepared by me or under my direct supervision and that I am a duly Licensed Professional Engineer under the laws of the State of Minnesota.

NOT FOR CONSTRUCTION

Signed: Christopher J. Dahn
Date: Lic. No. 58628

BOGART, PEDERSON & ASSOCIATES, INC.
LAND SURVEYING
CIVIL ENGINEERING
ENVIRONMENTAL SERVICES
13076 FIRST STREET, BECKER, MN 55308-9322
TEL: 763-262-8822 FAX: 763-262-8844

CEDAR RIDGE COMMUNITY LLC
CEDAR RIDGE COMMUNITY
City of North Branch, Chisago County, MN

DETAILS

SHEET NO.
C9.6

N:\Projects Current\22-0030.02 Betzler North Branch Plat\Civil\CAD Files\NB CoverSWPPP.dwg 5:33 PM 5/29/2025

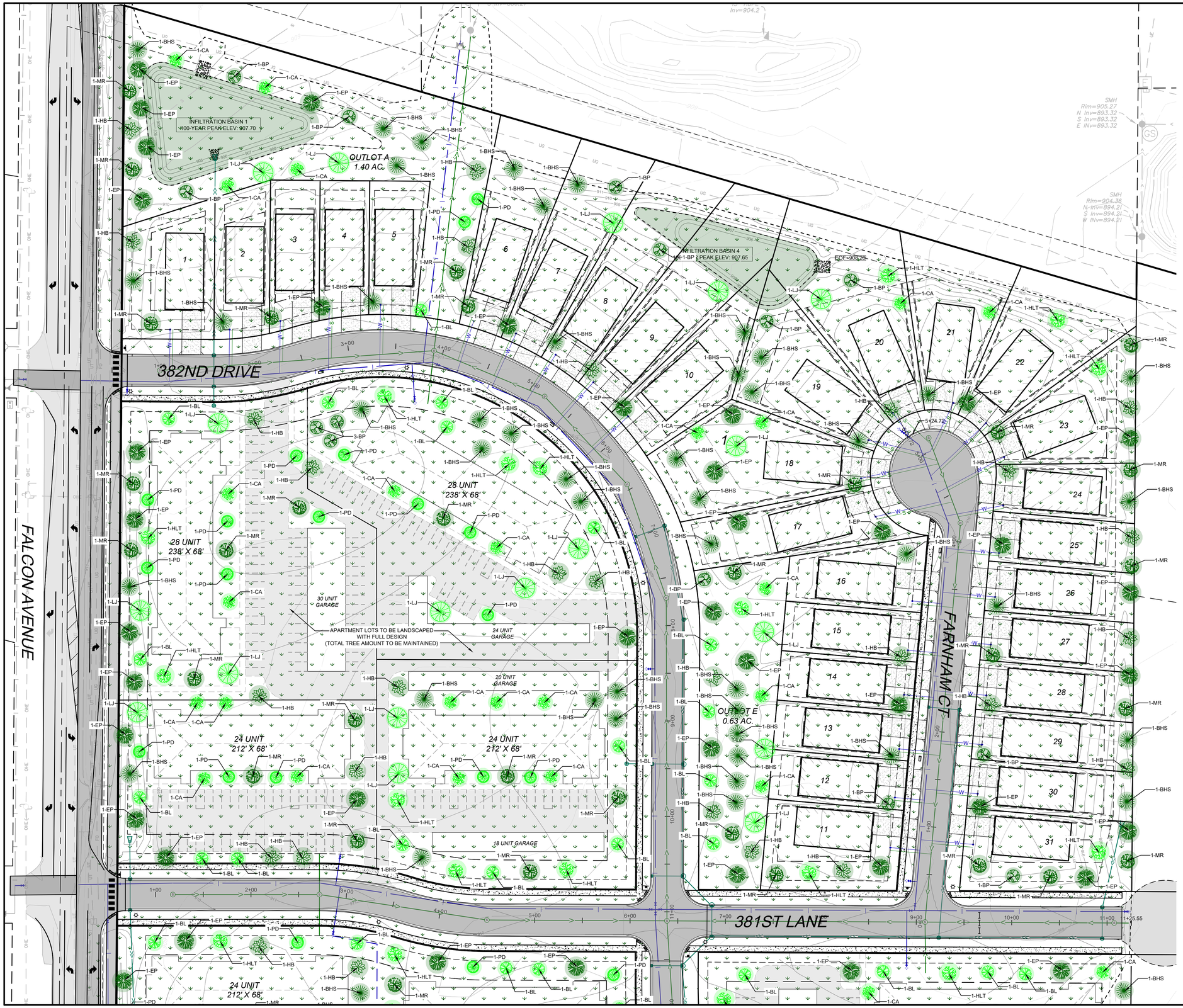


0' 50' 100'
SCALE: 1"=50'

## LEGEND:

- PROPOSED BITUMINOUS PAVEMENT
- PROPOSED CONCRETE SIDEWALK
- PROPOSED TURF ESTABLISHMENT
- PROPOSED INFILTRATION SEED EST.
- PROPOSED DECIDUOUS TREE
- PROPOSED CONIFEROUS TREE
- PROPOSED SHRUB

## LANDSCAPE REQUIREMENTS:

PER CITY OF NORTH BRANCH ZONING ORDINANCE:
ALL LANDSCAPING INCORPORATED IN SAID PLAN SHALL CONFORM TO THE FOLLOWING STANDARDS AND CRITERIA:

A. ALL PLANTS MUST AT LEAST EQUAL THE FOLLOWING MINIMUM SIZE:

| | POTTED/BARE ROOT OR BALLED & BURLAPPED |
|---|---|
| SHADE TREES | 2-INCH DIAMETER |
| HALF TREES | 1-1/2 INCH DIAMETER |
| EVERGREEN | 6 FEET HIGH |
| TALL SHRUBS & HEDGE MAT. | 6 FEET HIGH |
| LOW SHRUBS - DECIDUOUS | 24 - 30 INCHES |
| -EVERGREEN | 24 - 30 INCHES |
| -SPREADING EVERGREENS | 18 - 24 INCHES |

B. LANDSCAPE GUARANTEE: ALL NEW PLANTS SHALL BE GUARANTEED FOR TWO (2) FULL YEARS FROM THE TIME PLANTING HAS BEEN COMPLETED. ALL PLANTS SHALL BE ALIVE AND IN SATISFACTORY GROWTH AT THE END OF THE GUARANTEE PERIOD OR BE REPLACED.

(SEE CITY ORDINANCE FOR FULL REQUIREMENTS)

## LANDSCAPE NOTES:

1. ALL AREAS DISTURBED DURING CONSTRUCTION SHALL BE RESTORED AND VEGETATED AS SOON AS POSSIBLE. ANY FINISHED AREAS SHALL BE SEEDED AND MULCHED WITHIN 7 DAYS AFTER FINISHED GRADING IS COMPLETED IN ACCORDANCE TO MN/DOT 2575.
2. PLANTING SOIL SHALL CONSIST 1:1:1 CONSISTING OF 33% SELECT LOAMY TOPSOIL, 33% PEAT MOSS, 33% PIT RUN SAND.
3. ALL DISTURBED AREAS SHALL BE REVEGETATED WITH MN/DOT SEED MIX, MULCHED, & DISK ANCHORED, PER THE FOLLOWING SCHEDULE:

| | |
|---|---|
| SEED MIX 25-131: | 220 LB/AC. |
| INFILTRATION BASIN SEED MIX 33-261: | 35 LB/AC. |
| MULCH TYPE 3: | 2 TONS/AC. |

## TREE PRESERVATION NOTES:

- TREE REMOVAL AREA: 4.17 ACRES
- TREE PRESERVATION AREA: 0.04 ACRES
- TREE PRESERVATION %: 1%
- 50% OF TREE REMOVAL AREA: 2.08 ACRES
- ASSUMPTIONS FOR REPLACEMENT: 500 S.F. OF COVERAGE
- 2.08 ACRES / 500 S.F. 182 TREES TO BE REPLACED
- DWELLING UNITS (1 TREE PER): 255
- TREES PROPOSED: 437

| REV NO. | DATE | DESCRIPTION |
|---|---|---|
| 1 | 04/01/2025 | REVISION PER CITY REVIEW |
| 2 | 04/24/2025 | REVISION PER CITY REVIEW |
| 3 | 05/29/2025 | REVISION PER CITY & COUNTY REVIEW |

DATE: 05/29/2025
DESIGN BY: M.J.M
DRAWN BY: M.J.M
CHECKED BY: C.J.D
DWG FILE: EROSION
FILE NO.: 22-0030.00

I hereby certify that this plan, specification, or report was prepared by me or under my direct supervision and that I am a duly Licensed Professional Engineer under the laws of the State of Minnesota.

NOT FOR CONSTRUCTION

Signed: Christopher J. Dahn
Date: Lic. No. 58628

BOGART, PEDERSON & ASSOCIATES, INC.
LAND SURVEYING
CIVIL ENGINEERING
ENVIRONMENTAL SERVICES
13075 FIRST STREET, BECKER, MN 55308-9322
TEL: 763-262-9622 FAX: 763-262-9644

CEDAR RIDGE COMMUNITY LLC
CEDAR RIDGE COMMUNITY
City of North Branch, Chisago County, MN

NORTH LANDSCAPE PLAN

SHEET NO.
C10.1

N:\Projects Current\22-0030.02 Belcher North Branch Plat\Civil\CAD Files\NN Landscape.dwg 5:34 PM 5/29/2025

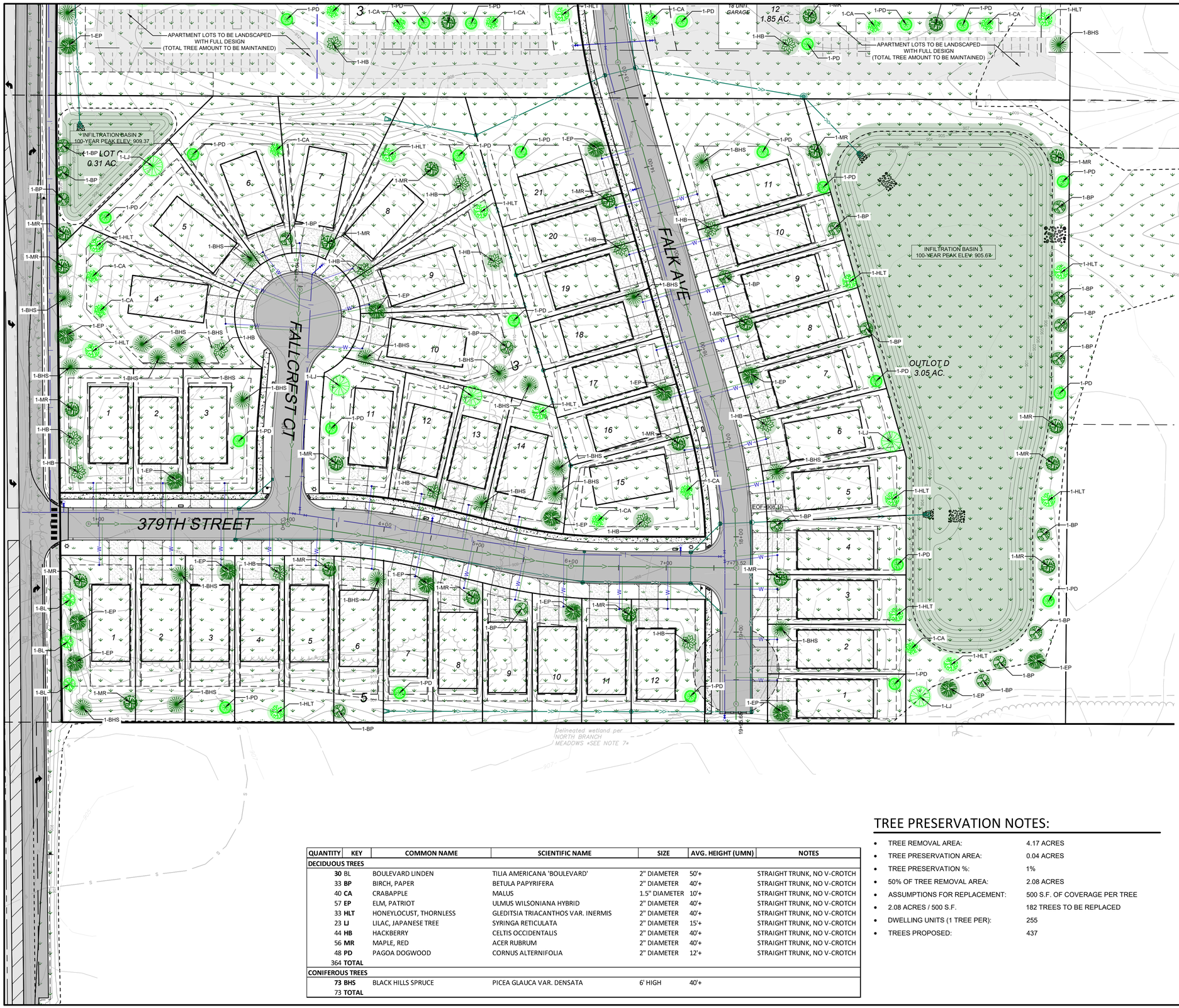


## LEGEND:

- PROPOSED BITUMINOUS PAVEMENT
- PROPOSED CONCRETE SIDEWALK
- PROPOSED TURF ESTABLISHMENT
- PROPOSED INFILTRATION SEED EST.
- PROPOSED DECIDUOUS TREE
- PROPOSED CONIFEROUS TREE
- PROPOSED SHRUB

## LANDSCAPE REQUIREMENTS:

PER CITY OF NORTH BRANCH ZONING ORDINANCE:
ALL LANDSCAPING INCORPORATED IN SAID PLAN SHALL CONFORM TO THE FOLLOWING STANDARDS AND CRITERIA:

A. ALL PLANTS MUST AT LEAST EQUAL THE FOLLOWING MINIMUM SIZE:

| | POTTED/BARE ROOT OR BALLED & BURLAPPED |
|---|---|
| SHADE TREES | 2-INCH DIAMETER |
| HALF TREES | 1-1/2 INCH DIAMETER |
| EVERGREEN | 6 FEET HIGH |
| TALL SHRUBS & HEDGE MAT. | 6 FEET HIGH |
| LOW SHRUBS - DECIDUOUS | 24 - 30 INCHES |
| -EVERGREEN | 24 - 30 INCHES |
| -SPREADING EVERGREENS | 18 - 24 INCHES |

B. LANDSCAPE GUARANTEE: ALL NEW PLANTS SHALL BE GUARANTEED FOR TWO (2) FULL YEARS FROM THE TIME PLANTING HAS BEEN COMPLETED. ALL PLANTS SHALL BE ALIVE AND IN SATISFACTORY GROWTH AT THE END OF THE GUARANTEE PERIOD OR BE REPLACED.

(SEE CITY ORDINANCE FOR FULL REQUIREMENTS)

| QUANTITY | KEY | COMMON NAME | SCIENTIFIC NAME | SIZE | AVG. HEIGHT (UMN) | NOTES |
|---|---|---|---|---|---|---|
| **DECIDUOUS TREES** | | | | | | |
| **30** | BL | BOULEVARD LINDEN | TILIA AMERICANA 'BOULEVARD' | 2" DIAMETER | 50'+ | STRAIGHT TRUNK, NO V-CROTCH |
| 33 | **BP** | BIRCH, PAPER | BETULA PAPYRIFERA | 2" DIAMETER | 40'+ | STRAIGHT TRUNK, NO V-CROTCH |
| 40 | **CA** | CRABAPPLE | MALUS | 1.5" DIAMETER | 10'+ | STRAIGHT TRUNK, NO V-CROTCH |
| 57 | **EP** | ELM, PATRIOT | ULMUS WILSONIANA HYBRID | 2" DIAMETER | 40'+ | STRAIGHT TRUNK, NO V-CROTCH |
| 33 | **HLT** | HONEYLOCUST, THORNLESS | GLEDITSIA TRIACANTHOS VAR. INERMIS | 2" DIAMETER | 40'+ | STRAIGHT TRUNK, NO V-CROTCH |
| 23 | **LJ** | LILAC, JAPANESE TREE | SYRINGA RETICULATA | 2" DIAMETER | 15'+ | STRAIGHT TRUNK, NO V-CROTCH |
| 44 | **HB** | HACKBERRY | CELTIS OCCIDENTALIS | 2" DIAMETER | 40'+ | STRAIGHT TRUNK, NO V-CROTCH |
| 56 | **MR** | MAPLE, RED | ACER RUBRUM | 2" DIAMETER | 40'+ | STRAIGHT TRUNK, NO V-CROTCH |
| 48 | **PD** | PAGOA DOGWOOD | CORNUS ALTERNIFOLIA | 2" DIAMETER | 12'+ | STRAIGHT TRUNK, NO V-CROTCH |
| 364 | **TOTAL** | | | | | |
| **CONIFEROUS TREES** | | | | | | |
| **73** | **BHS** | BLACK HILLS SPRUCE | PICEA GLAUCA VAR. DENSATA | 6' HIGH | 40'+ | |
| 73 | **TOTAL** | | | | | |

## TREE PRESERVATION NOTES:

- TREE REMOVAL AREA: 4.17 ACRES
- TREE PRESERVATION AREA: 0.04 ACRES
- TREE PRESERVATION %: 1%
- 50% OF TREE REMOVAL AREA: 2.08 ACRES
- ASSUMPTIONS FOR REPLACEMENT: 500 S.F. OF COVERAGE PER TREE
- 2.08 ACRES / 500 S.F. 182 TREES TO BE REPLACED
- DWELLING UNITS (1 TREE PER): 255
- TREES PROPOSED: 437

## LANDSCAPE NOTES:

1. ALL AREAS DISTURBED DURING CONSTRUCTION SHALL BE RESTORED AND VEGETATED AS SOON AS POSSIBLE. ANY FINISHED AREAS SHALL BE SEEDED AND MULCHED WITHIN 7 DAYS AFTER FINISHED GRADING IS COMPLETED IN ACCORDANCE TO MN/DOT 2575.
2. PLANTING SOIL SHALL CONSIST 1:1:1 CONSISTING OF 33% SELECT LOAMY TOPSOIL, 33% PEAT MOSS, 33% PIT RUN SAND.
3. ALL DISTURBED AREAS SHALL BE REVEGETATED WITH MN/DOT SEED MIX, MULCHED, & DISK ANCHORED, PER THE FOLLOWING SCHEDULE:

| | |
|---|---|
| SEED MIX 25-131: | 220 LB/AC. |
| INFILTRATION BASIN SEED MIX 33-261: | 35 LB/AC. |
| MULCH TYPE 3: | 2 TONS/AC. |

| REV NO. | DATE | DESCRIPTION |
|---|---|---|
| 1 | 04/01/2025 | REVISION PER CITY REVIEW |
| 2 | 04/24/2025 | REVISION PER CITY REVIEW |
| 3 | 05/29/2025 | REVISION PER CITY & COUNTY REVIEW |

DATE: 05/29/2025
DESIGN BY: MJM
DRAWN BY: MJM
CHECKED BY: CJD
DWG FILE: EROSION
FILE NO.: 22-0030.00

I hereby certify that this plan, specification, or report was prepared by me or under my direct supervision and that I am a duly Licensed Professional Engineer under the laws of the State of Minnesota.

NOT FOR CONSTRUCTION

Signed: Christopher J. Dahn
Date: Lic. No. 58628

BOGART, PEDERSON & ASSOCIATES, INC.
LAND SURVEYING
CIVIL ENGINEERING
ENVIROMENTAL SERVICES
13079 FIRST STREET, BECKER, MN 55308-9322
TEL: 763-262-9622 FAX: 763-262-9644

CEDAR RIDGE COMMUNITY LLC
CEDAR RIDGE COMMUNITY
City of North Branch, Chisago County, MN

SOUTH LANDSCAPE PLAN

SHEET NO.
C10.2

N:\Projects Current\22-0030.02 Belzer North Branch Plat\Civil\CAD Files\NB Landscape.dwg
5:34 PM 5/29/2025

# Memorandum

***To:*** ***North Branch Development Review Committee***

***From:*** ***Justin Messner, Jeff Oliver, Kris Keller, Kendra Fallon WSB***

***Date:*** ***June 5, 2025***

***Re:*** ***Cedar Ridge Community - Preliminary Plat Review***
***WSB Project No. 028150-000***

---

Final Plans were submitted for the proposed Cedar Ridge Community Development in the City of North Branch, Chisago County. The project is located to the east of Falcon Avenue between 379th Street and 382nd Drive. Engineering review comments were generated from the following documents:

- Cedar Ridge Community Civil Set 5-29-2025.pdf
- Cedar Ridge Storm Water 4-24-2025.pdf
- Prelim Plat REV 2 4-24-25 pg.1.pdf
- Prelim Plat REV 2 4-24-25 pg.2.pdf
- NB Existing Hydro.hcp
- NB Proposed Hydro.hcp

The following items should be addressed, including the red-lined comments on the submitted plans.

1) Separate parcels have now been added to the apartments buildings proposed in Block 2. Provide a driveway easement or outlot for the share driveway that will serve all 4 apartment buildings.

All other previous comments have been addressed.

**In any resubmittal from the applicant, we request that the comments above be restated, and the applicant identify how each comment was addressed.** Any questions or comments can be directed to Justin Messner at jmessner@wsbeng.com or 612.388.9652.

178 E 9TH STREET | SUITE 200 | SAINT PAUL, MN | 55101 | 651.286.8450 | WSBENG.COM

**City of North Branch**
**Staff Report**

**Prepared By: Kevin Schieber, Mayor**

**Presenter: Kevin Schieber, Mayor**

**Date: 06/05/2025**

**Board & Commission: City Council**

**Subject: Minimum Lot Sizes and Setback Requirements for Residential Lots**

---

Background:
There are concerns by some city leaders and residents that lot sizes may be too small and our minimum setback distances too short, creating higher than desired densities in our residential areas. There is also an interest in adjusting our minimum and maximum dwellings per acre allowances.

Action:
Discuss desired changes and the process needed to make changes in our zoning districts.

**Voting Requirements:**

**Voting Options** **Simple Majority**

**Dimensional & Design Standards Table**

| Use | R-1 single family | R-1, 2 family dwellings, per unit | R-2, single family | R-2, 2 family dwellings, per unit | R-2, 3-6 attached units, per townhouse | R-3, 2 family dwellings, per unit | R-3 3-6 attached units - per townhouse | R-3: 7+ attached units and condominiums (see below for apartment standards)[H] | R -3 detached single family | RR | AG | Public | CBD | B1 | BN | I1 | I2 | Flood plain | Shore-land |
|---|---|---|---|---|---|---|---|---|---|---|---|---|---|---|---|---|---|---|---|
| Front yard setback- interior - in ft - at lot line or ROW | 30 | 30 | 30 | 30 | 30 | 30 | 30 | 30 | 30 | 40 | 50 | 30 | 0 | 15, 50 outside USA | 15 | 20, 50 outside of USA | 20, 50 outside of USA | See Division 18 | See Division 19 |
| Lot Width - corner - in ft at front set-back line | 80 | 50 | 80 | 50 | 150 | 50 | 150 | 150 | 50 | 110 | 300 | NA | 25 | 50, 300 outside of USA | 50 | 100, 300 outside of USA | 100, 300 outside of USA | | |
| Lot Width - in ft - at front set-back line | 80 | 50 | 80 | 50 | 150 | 50 | 150 | 150 | 50 | 110 | 300 | NA | 25 | 50, 300 outside of USA | 50 | 100, 300 outside of USA | 100, 300 outside of USA | | |
| Ditch easement - in ft | 45 | 45 | 45 | 45 | 45 | 45 | 45 | 45 | 45 | 45 | 45 | 45 | 45 | 45 | 45 | 45 | 45 | | |
| Rear yard setback- interior lot - in ft | 30 | 30 | 30 | 30 | 30 | 30 | 30 | 30 | 30 | 30 | 50 | 30 | 0 | 15, 50 outside USA | 15 | 20, 50 outside of USA | 20, 50 outside of USA | | |
| Rear-yard setback corner lot - in ft | 15 | 15 | 15 | 15 | 15 | 15 | 15 | 30 | 15 | 15 | 50 | 15 | 0 | 15, 50 outside USA | 15 | 20, 50 outside of USA | 20, 50 outside of USA | | |
| Side set-back- interior lot - in ft | 6 | 6', 0' for attached portion of unit | 6 | 6', 0' for attached portion of unit | 6', 0' for attached portion of unit | 6', 0' for attached portion of unit | 6', 0' for attached portion of unit | 10 | 6 | 10 | 50 | 6 | 0 | 10, 0 if attached, 50 outside USA | 10 | 20, 50 outside of USA | 20, 50 outside of USA | | |
| Side setback- corner - in ft | 30 | 30 | 30 | 20 | 30 | 30 | 20 | 30 | 30 | 30 | 50 | 30 | 0 | 15, 50 outside USA | 15 | 20, 50 outside of USA | 20, 50 outside of USA | | |
| Lot Depth - minimum in ft | 100 | 100 | 100 | 100 | 100 | 100 | 100 | 100 | 100 | 300 | 500 | NA | 100 | 100, 300 outside of USA | 100 | 100, 300 outside of USA | 100, 300 outside of USA | | |
| Minimum Lot Size - sq ft | 12,000 | 7,500 | 12,000 | 6,500 | 2,000 | 6,500 | 2,000 | Not more than 35% of the lot shall be covered by all buildings. | 6,500 | 1 acre buildable | 10 acres | NA | 2,500 | 5,000 in USA, 10 acres outside USA | 5,000 | 10,000, 10 acres outside of USA | 10,000, 10 acres outside of USA | | |
| Maximum base density | 1-4 units per acre | 1-4 units per acre | 1-6 units per acre | 1-6 units per acre | 1-6 units per acre | 6+ units per acre | 6+ units per acre | 6+ units per acre | 6+ units per acre | 1 house per buildable acre | 1 SF home | NA | NA | NA | NA | NA | NA | | |
| Minimum Principal building size sq ft - main floor, per dwelling [C] | 800 | 800 | 800 | 800 | 800 | 800 | 800 | 800 | 800 | 800 | 800 | NA | ~ | ~ | ~ | ~ | ~ | | |
| Apartment -Miniumum sq ft | | | | | | | | | | | | | | | | | | | |
| Efficiency/studio | NA | NA | NA | NA | 400 | NA | 400 | 400 | NA | NA | NA | NA | 400 | 400 | NA | NA | NA | | |
| 1 bedroom | NA | NA | NA | NA | 800 | NA | 800 | 650 | NA | NA | NA | NA | 650 | 650 | NA | NA | NA | | |
| 2 bedroom | NA | NA | NA | NA | 800 | NA | 800 | 750 | NA | NA | NA | NA | 750 | 750 | NA | NA | NA | | |
| 3 bedroom | NA | NA | NA | NA | 800 | NA | 800 | 850 | NA | NA | NA | NA | 850 | 850 | NA | NA | NA | | |
| Principal Structure - Min Width[J - in ft] | 24 | 24 | 24 | 24 | 24 | 24 | 24 | 24 | 24 | 24 | 24 | NA | NA | NA | ~ | ~ | ~ | | |

| | | | | | | | | | | | | | | | | | |
|---|---|---|---|---|---|---|---|---|---|---|---|---|---|---|---|---|---|
| Garage - sq ft | 400 [B] | 400 [B] | 400 [B] | 400 [B] | 400 [B] | 400 [B] | if provided, 200 [E] | ~ | 400 | 400 [B] | 400 [B] | NA | ~ | ~ | ~ | ~ | ~ |
| Wetland natural buffer /structure setback | 20 | 20 | 20 | 20 | 20 | 20 | 20 | 20 | 20 | 20 | 20 | 20 | 20 | 20 | 20 | 20 | 20 |
| Building height - in ft | 35 [A] | 35 [A] | 35 [A] | 35 [A] | 35 [A] | 35 [A] | 35 [A] | 3 stories or 50' [A] | 35[A] | 35 [A] | 35 [A] | 75 [A] | 50 [A] | 50 [A] | 50 [A] | 75 [A] | 75 [A] |
| Impervious surface - maximum | 50% | 50% | 50% | 50% | 50% | 50% | 70% | 75% | 70% | 50% | 50% | NA | na | 90% | 90% | 90% | 90% |
| Floor elevation (lowest) | 3 | 3 | 3 | 3 | 3 | 3 | 3 | 3 | 3 | 3 | 3 | NA | 3 | 3 | 3 | 3 | 3 |
| Floor elevation (lowest) - 100 yr flood - in ft | 2 | 2 | 2 | 2 | 2 | 2 | 2 | 2 | 2 | 2 | 2 | NA | 2 | 2 | 2 | 2 | 2 |
| Foundation Requirements | Yes [C] | Yes [C] | Yes [C] | Yes [C] | Yes [C] | Yes [C] | Yes [C] | Yes [C] | Yes[C] | Yes [C] | Yes [C] | NA | Yes [C] | Yes [C] | Yes [C] | Yes [C] | Yes [C] |
| Driveway Surfacing | Yes [D] | Yes [D] | Yes [D] | Yes [D] | Yes [D] | Yes [D] | Yes [D] | Yes [D] | Yes [D] | Yes [D] | NA | NA | Yes [D] | Yes [D] | Yes [D] | Yes [D] | Yes [D] |
| Landscape Requirements | Yes [E] | Yes [E] | Yes [E] | Yes [E] | Yes [E] | Yes [E] | Yes [E] | Yes [E] | Yes [E] | Yes [E] | Yes [E] | NA | Yes [E] | Yes [E] | Yes [E] | Yes [E] | Yes [E] |
| Sign Requirement | Yes [F] | Yes [F] | Yes [F] | Yes [F] | Yes [F] | Yes [F] | Yes [F] | Yes [F] | Yes [F] | Yes [F] | Yes [F] | NA | Yes [F] | Yes [F] | Yes [F] | Yes [F] | Yes [F] |
| Off-Street Parking Requirements | Yes [G] | Yes [G] | Yes [G] | Yes [G] | Yes [G] | Yes [G] | Yes [G] | Yes [G] | Yes [G] | Yes [G] | Yes [G] | NA | Yes [G] | Yes [G] | Yes [G] | Yes [G] | Yes [G] |

**All buildings shall comply with State of MN Building Code. PRovisions for decks shall be shown on original plans when a sliding glass door, patio door, etc. is installed.**
**Provisions for decks must be shown on original plans when a sliding glass door, patio, door, etc. are to be installed**

A. Height Exceptions - building height limits shall not apply to belfries, cupolas, domes, spires, monuments, airway beacons, radio towers, flag poles, chimneys or flues; nor to elevators, watertanks, poles, towers and other structures for essential services; nor to similar structures extending above the roof of any building and not occupying more than 25 percent of the area of such roof.

B. Rear or side yard or attached garage required.

C. Foundation Requirements -Permanent full perimeter footings; with foundation walls of concrete, concrete block, wood or any other approved material or method. Decks and porches are allowed on pier type footings.

D. Residential - See Section 66-855. All zoning districts: shall be concrete or bituminous, unless stated otherwise.

E. See Article 10- Landscaping Requirements; except Ag, see Section 66-390.

F. See Article 6 - Sign requirements

G. See Article 7 - Off Street Parking Requirements.

H. Setbacks measured from outside walls or the edge of private condo spaces including ground level decks and yard spaces.